City of Deltona

Mayor
John Masiarczyk

Vice Mayor
Zenaida Denizac
District 1

Commissioners:

Webster Barnaby
District 2

Heidi Herzberg
District 3

Nancy Schleicher
District 4

Fred Lowry
District 5

Chris Nabicht
District 6

Acting City Manager
Dave Denny

REGULAR CITY COMMISSION MEETING
MONDAY, OCTOBER 21, 2013
1:00 A.M.

DELTONA COMMISSION CHAMBERS
2345 PROVIDENCE BLVD.
DELTONA, FLORIDA

AGENDA

1. CALL TO ORDER:

2. ROLL CALL – CITY CLERK:

3. INVOCATION AND PLEDGE TO THE FLAG:

A. Invocation Presented by Vice Mayor Denizac.

4. APPROVAL OF MINUTES & AGENDA:

A. Approval of Minutes - Regular City Commission Meeting of October 7, 2013.

B. Additions or Deletions to Agenda.

5. PRESENTATIONS/AWARDS/REPORT:

A. Presentation of Certificates of Recognition and Thanks, to the student artists who created the "Think Before You Throw" posters, to help spread the awareness of keeping Deltona clean.

B. **Presentation - Quarterly Reports of City Advisory Boards/Committees.**

6. **PUBLIC FORUM - Citizen comments for any items. (4 minute maximum length)**

CONSENT AGENDA: **All items marked with an * will be considered by one motion unless removed from the Consent Agenda by a member of the City Commission.**

7. CONSENT AGENDA:

***A. Request for approval of renewal of Physio-Control, Inc. Technical Service Support Agreement.**

***B. Request for approval to piggyback State of Florida Contract #760-000-10-1 for a Toro Reelmaster 5510 Mower.**

***C. Request for approval to award Bid # PW 13-18, Magdalena Water Treatment Plant Odor Control System.**

***D. Request for approval to purchase playground equipment for Manny Rodriguez Park piggybacking the US Communities Contract #110171.**

***E. Request for approval to purchase a Clam Body Truck piggybacking NJPA Contract number 070313-P11.**

8. ORDINANCES AND PUBLIC HEARINGS:

9. OLD BUSINESS:

10. NEW BUSINESS:

A. Request for approval of budget amendment to cover the cost of the Emergency Generator for Fire Station 64.

B. Request for approval of budget amendment for Sidewalk Funds.

C. Request to authorize the Acting City Manager to begin negotiations with Capitol Insight for Government Relations and Lobbying Services and approval of a budget amendment for $50,000

D. Update re: Scrub Jay Mitigation Project.

11. CITY COMMISSION COMMENTS:

12. CITY ATTORNEY COMMENTS:

13. CITY MANAGER COMMENTS:

14. ADJOURNMENT:

NOTE: If any person decides to appeal any decision made by the City Commission with respect to any matter considered at this meeting or hearing, he/she will need a record of the proceedings, and for such purpose he/she may need to ensure that a verbatim record of the proceedings is made, which record includes the testimony and evidence upon which the appeal is to be based (F.S. 286.0105).

Individuals with disabilities needing assistance to participate in any of these proceedings should contact the City Clerk, Joyce Raftery 48 hours in advance of the meeting date and time at (386) 878-8500.

AGENDA MEMO

TO: Mayor & City Commission **AGENDA DATE:** 10/21/2013

FROM: William D. Denny, Acting City Manager **AGENDA ITEM:** 3 - A

SUBJECT: Invocation Presented by Vice Mayor Denizac.

LOCATION:	N/A
BACKGROUND:	At the Regular City Commission Meeting on Monday, October 17, 2011, the City Commission approved to have each Commissioner by District schedule someone to present the invocation at each Regular City Commission meeting rotating each Commissioner by District starting with District #1, #2, #3, #4, #5, #6 and the Mayor.
ORIGINATING DEPARTMENT:	City Clerk's Office
SOURCE OF FUNDS:	N/A
COST:	N/A
REVIEWED BY:	City Clerk
STAFF RECOMMENDATION PRESENTED BY:	N/A - Invocation Only.
POTENTIAL MOTION:	N/A - Invocation Only.
AGENDA ITEM APPROVED BY:	William D. Denny, Acting City Manager

AGENDA MEMO

TO: Mayor & City Commission **AGENDA DATE:** 10/21/2013

FROM: William D. Denny, Acting City Manager **AGENDA ITEM:** 4 - A

SUBJECT: Approval of Minutes - Regular City Commission Meeting of October 7, 2013.

LOCATION:	N/A
BACKGROUND:	N/A
ORIGINATING DEPARTMENT:	City Clerk's Office
SOURCE OF FUNDS:	N/A
COST:	N/A
REVIEWED BY:	City Clerk's Office
STAFF RECOMMENDATION PRESENTED BY:	City Clerk Joyce Raftery - To approve the minutes of the Regular City Commission Meeting of October 7, 2013.
POTENTIAL MOTION:	"To approve the minutes of the Regular City Commission Meeting of October 7, 2013."
AGENDA ITEM APPROVED BY:	_____ William D. Denny, Acting City Manager
ATTACHMENTS:	• Minutes of RCM October 7, 2013

CITY OF DELTONA, FLORIDA
REGULAR CITY COMMISSION MEETING
MONDAY, OCTOBER 7, 2013

A Regular Meeting of the Deltona City Commission was held on Monday, October 7, 2013 at the City Hall Commission Chambers, 2345 Providence Boulevard, Deltona, Florida.

1. CALL TO ORDER:

The meeting was called to order at 6:30 p.m. by Mayor Masiarczyk.

2. ROLL CALL:

Mayor	John Masiarczyk	Present
Vice Mayor	Zenaida Denizac	Present
Commissioner	Webster Barnaby	Present
Commissioner	Heidi Herzberg	Present
Commissioner	Fred Lowry	Present
Commissioner	Chris Nabicht	Present
Commissioner	Nancy Schleicher	Present
Acting City Manager	Dave Denny	Present
City Attorney	Becky Vose	Present
Deputy City Clerk	Mitch Honaker	Present

Also present: Public Works/Deltona Water Director Gerald Chancellor; Planning and Development Services Director Chris Bowley; Parks and Recreation Director Steve Moore; Building and Enforcement Services Director/Acting Deputy City Manager Dale Baker; Deputy Chief Robert Rogers; and VCSO Captain Dave Brannon.

3. INVOCATION AND PLEDGE TO THE FLAG:

Mayor Masiarczyk read some of the comments from the Pope about the necessity of political prayer and then had a Silent Invocation.

The National Anthem was sung by Pine Ridge High School Chorus from Deltona.

4. APPROVAL OF MINUTES & AGENDA:

A. Minutes:

1. Approval of Minutes – Regular City Commission Meeting of September 16, 2013.

Motion by Commissioner Schleicher, seconded by Commissioner Herzberg to approve the minutes of the Regular City Commission Meeting of September 16, 2013.

Motion carried unanimously with members voting as follows: Commissioner Barnaby, For; Commissioner Herzberg, For; Commissioner Nabicht, For; Commissioner Schleicher, For; Commissioner Lowry, For; Vice Mayor Denizac, For; and Mayor Masiarczyk, For.

B. Additions or Deletions to Agenda:

5. PRESENTATIONS/AWARDS/REPORTS:

A. Presentation – Super Star Student of the Month Certificates for August/September, 2013.

The Commission presented Super Star Students of the Month certificates for August/September, 2013.

B. Proclamation – Fire Prevention Week October 6-12, 2013.

Mayor Masiarczyk and the Commission presented the proclamation to Deputy Chief Rogers and members of the Deltona Fire Department.

C. Presentation to Cassie Niemiece for Outstanding Assistance to her Neighborhood.

Deputy City Clerk Mitch Honaker read the award for Outstanding Assistance into the minutes, and Mayor Masiarczyk stated that he would present the award to Ms. Niemiece at a later date.

6. PUBLIC FORUM – Citizen comments for items not on the agenda.

a) James Webster, 684 Raleigh Court, stated that he was concerned about an incident that occurred in his neighborhood on October 2, 2013, resident safety, and asked what the VCSO canvassing procedures were for incidents.

Mayor Masiarczyk asked if the area didn't have a Neighborhood Watch, to consider establishing one, and he suggested the resident leave his contact information with Captain Brannon from the VCSO so he could research the incident and provide him with an update.

Commissioner Barnaby thanked Mr. Webster for bringing the incident to the Commission, and asked what the VCSO standard operating procedures were, and Captain Brannon explained the procedures.

Commissioner Herzberg stated that several similar incidents occurred in her neighborhood, the VCSO deputies were always very thorough, kind, and informative, the VCSO helicopter was always in the area, and the VCSO deputies always explained the situation.

b) Stephen Bacon, 257 Bayou Circle, stated that he received a notice from Deltona Water on September 22, 2013 about the quality of the water, possible side effects to customers, that corrective action would take about 18 months, and he requested the Commission consider postponing the 25% surcharge for a period of 24 months.

Mayor Masiarczyk stated that the City's bond rating is affected by the water rates and that it would be taken under consideration, and that the City has already started the process to rectify the problem. He asked the Acting City Manager about the Federal requirement to send out notices when the levels reach a certain percentage. Acting City Manager Dave Denny replied that when Trihalomethane (THM) levels reach 80 milligrams per liter that notices are required to be sent out to users, and that the section of water system involved effects approximately 6,000 water customers.

c) Paula Yorker, 1826 Portview Drive, Executive Director of the SIA Brain Awareness Foundation, stated that SIA brings awareness to the community about the signs and symptoms of any illnesses or diseases dealing with the brain, , SIA is preparing for their second annual walkathon at Dewey O. Boster Park on October 19, 2013 from 9:00 a.m. until 12:00 p.m., proceeds from the walkathon provides revenue for their scholarship awards program to high school students who are going

to major in the medical field, that she wanted to make the community aware of the event, invited the Commission to join them for the walkathon, and provided the Commission with the SIA website of www.siabrainawarenessfoundation.org.

7. CONSENT AGENDA:

Mayor Masiarczyk read the title of each item on the Consent Agenda.

Vice Mayor Denizac requested to pull Consent Agenda Item 7-G.

Motion by Commissioner Herzberg, seconded by Commissioner Schleicher to approve Consent Agenda Items 7-A through 7-F, and Item 7-H.

Motion carried unanimously with members voting as follows: Commissioner Barnaby, For; Commissioner Herzberg, For; Commissioner Nabicht, For; Commissioner Schleicher, For; Commissioner Lowry, For; Vice Mayor Denizac, For; and Mayor Masiarczyk, For.

***A. Request for approval to award Bid #PW 13-15 for as needed Asphalt paving and resurfacing.**

Approved by Consent Agenda – to approve award to Halifax Paving to be utilized as needed for an agreement period of one (1) year with the option to renew for three (3) additional one (1) year periods at an annual cost not to exceed $500,000 in the FY 13/14 and not to exceed the Commission appropriated funds for each additional fiscal year during the remaining terms of the contract.

***B. Request for approval to award Bid # PW 13-16, Courtland Blvd./Skate Park Stormwater Improvements.**

Approved by Consent Agenda – to award Bid #PW-13-16 for the Courtland Blvd. / Skate Park Stormwater Improvements Project to Hazen Construction, LLC at a total cost of $139,440.00.

***C. Request for approval to award Bid # PW 13-17 for As Needed Electric Motor and Industrial Pump Repairs.**

Approved by Consent Agenda – to approve award of this service to C & C Electric Works to be utilized as needed for an agreement period of one (1) year with the option to renew for three (3) additional one (1) year periods at an annual cost not to exceed $150,000 in the FY 13/14 and not to exceed the Commission appropriated funds for each additional fiscal year during the remaining terms of the contract.

***D. Request for approval to award Bid #13019 for as needed electrical services.**

Approved by Consent Agenda – to approve award of Bid #13019 for as needed Electrical Services to Electrical Solutions to be used as needed within the appropriated funding for each fiscal year throughout the award term.

***E. Request for consideration for renewal of Halifax Humane Society Contract.**

Approved by Consent Agenda – to renew the contract for services between Halifax Humane Society and the City of Deltona as specified for an additional year from October 1, 2013 through September 30, 2014.

***F. Request for consideration for renewal of South East Volusia Humane Society.**

Approved by Consent Agenda – to renew the contract for services between South East Volusia Humane Society and the City of Deltona as specified for an additional year from October 1, 2013 through September 30, 2014.

G. Request for approval of 2013-2014 Law Enforcement Services Agreement.

Vice Mayor Denizac stated that after the last Commission Workshop when the renewal of Deltona's Law Enforcement Agreement (LEA) with the VCSO was mentioned that she had conducted some research comparing the cost of the LEA between the VCSO and Deltona to other cities LEA costs, to include several cities with comparable population levels to Deltona who are paying over $30 million dollars for their LEA. She discussed several cities contract costs, law enforcement services provided to Deltona and to other cities, the crime index in Deltona, Deltona's LEA costs of $9.5 million dollars for a City with over 85,000 residents was a great deal less than what other cities are paying, and that Deltona is getting really good service for the money that it pays.

Motion by Vice Mayor Denizac, seconded by Commissioner Nabicht to authorize the Mayor and Acting City Manager to execute the Law Enforcement Services Agreement for fiscal year 2013-2014 in the amount of $9,594,958.00.

Motion carried unanimously with members voting as follows: Commissioner Barnaby, For; Commissioner Herzberg, For; Commissioner Nabicht, For; Commissioner Schleicher, For; Commissioner Lowry, For; Vice Mayor Denizac, For; and Mayor Masiarczyk, For.

Commissioner Nabicht stated that he would like the VCSO to provide a briefing at an upcoming Commission Workshop rating law enforcement services in Deltona, discussing crime statistics and trends in Deltona, and how the Commission could improve the City's overall law enforcement rating.

Commissioner Lowry stated that some years ago Sheriff Johnson provided the Commission with Volusia County cities crime per capita data with Deltona being the second lowest City and asked Sheriff Johnson for updated law enforcement statistics concerning Deltona. Sheriff Johnson passed out a chart to the Commission for the 2012 Annual Index Crime Rate Comparison on Volusia County Cities and Police Departments which included response times that refutes an earlier statement that was made. Sheriff Johnson compared the faster response time for different types of incidents for Deltona as compared to unincorporated Volusia County, that he is very proud to provide law enforcement services to the City of Deltona, and he thanked the Commission for their vote of confidence in the VCSO.

***H. Request for consideration of change in Commission meeting dates for 2013 holiday season and approval of the 2014 holiday meeting schedule.**

Approved by Consent Agenda – to change the December meeting schedule to include only one (1) Regular Commission meeting on Monday, December 16th and no Commission Workshops during the month of December 2013 and to approve the meeting calendar for 2014 as presented.

8. ORDINANCES AND PUBLIC HEARINGS:

A. Public Hearing – Ordinance No. 12-2013, amending Subpart A, Chapter 38, "Environment", by adding new Article VII "Stormwater Discharge Pollutant Control" and new Article VIII "Florida-Friendly Fertilizer use on Urban Landscapes, at second and final reading.

Mayor Masiarczyk asked staff if there were any updates or changes to the Ordinance from first reading and Mr. Denny replied "no".

Mayor Masiarczyk opened and closed the public hearing as there were no public comments.

City Attorney Becky Vose read the title of Ordinance No. 12-2013.

AN ORDINANCE OF THE CITY COMMISSION OF THE CITY OF DELTONA, FLORIDA, AMENDING CODE OF ORDINANCES SUBPART A, CHAPTER 38, "ENVIRONMENT", BY ADDING NEW ARTICLE VII "STORMWATER DISCHARGE POLLUTANT CONTROL" AND NEW ARTICLE VIII "FLORIDA-FRIENDLY FERTILIZER USE ON URBAN LANDSCAPES"; PROVIDING FOR CONFLICTS, SEVERABILITY AND AN EFFECTIVE DATE.

Motion by Commissioner Nabicht, seconded by Commissioner Herzberg to approve Ordinance No. 12-2013 at second and final reading.

Motion carried with members voting as follows:

Commissioner Barnaby	**For**
Commissioner Herzberg	**For**
Commissioner Lowry	**For**
Commissioner Nabicht	**For**
Commissioner Schleicher	**For**
Vice Mayor Denizac	**Against**
Mayor Masiarczyk	**For**

Ordinance No. 12-2013 was approved at first reading at 7:32 p.m.

9. OLD BUSINESS:

Mayor Masiarczyk stated that he wanted to inform the public that the Commission was a victim of vicious and disgusting emails, and that no one on City staff or the Commission was involved in transmitting the emails. Mr. Denny stated that the City's Internet Technology (IT) Department blocked the senders email address.

10. NEW BUSINESS:

A. Request for approval to execute Cost Share Agreement with the St. Johns River Water Management District for the Doyle Road Reclaimed Water Interconnect Project and the Howland Blvd. Phase 3 Reclaimed Water Construction Project.

Mayor Masiarczyk opened and closed the public hearing as there were no public comments.

Motion by Commissioner Nabicht, seconded by Commissioner Herzberg to approve and execute the Cost Share Agreement with the St. Johns River Water Management District for the Doyle Road Reclaimed Water Interconnect Project and the reclaimed portion of the Howland Blvd. Phase 3 Utility Relocate Project.

Motion carried unanimously with members voting as follows: Commissioner Barnaby, For; Commissioner Herzberg, For; Commissioner Nabicht, For; Commissioner Schleicher, For; Commissioner Lowry, For; Vice Mayor Denizac, For; and Mayor Masiarczyk, For.

B. Request for approval to execute Joint Project Agreements with Volusia County for both the Saxon Blvd. Utility and Stormwater Improvements project and the Howland Blvd. phase 3 widening project.

Mayor Masiarczyk opened and closed the public hearing as there were no public comments.

Motion by Commissioner Barnaby, seconded by Commissioner Lowry to approve and authorize the execution, by the Mayor, of both Joint Project Agreements for the Utility and Stormwater Improvements of Saxon Blvd. and for the Utility Adjustment and Road Construction of Howland Blvd. with Volusia County.

Commissioner Nabicht asked if the school board was involved in the project, if the pipe relocation was going to start in front of Pride Elementary School, and if the project would take care of correcting all of the underground utility problems in that area. Mr. Denny replied that the Howland Boulevard portion of the project is the road widening of Howland Boulevard which will start at Courtland Boulevard and go all the way down in front of Walmart, that the school board has attended some of the meetings so it is aware of the project, and that all of the underground utility issues would be taken care of with the completion of the road widening project.

Vice Mayor Denizac stated that as she has been saying for years that there is a need to put in a flashing light at Pine Ridge High School. Mr. Denny replied that staff will discuss with the County the possibility of installing a flashing light at the school entrance.

Motion carried unanimously with members voting as follows: Commissioner Barnaby, For; Commissioner Herzberg, For; Commissioner Nabicht, For; Commissioner Schleicher, For; Commissioner Lowry, For; Vice Mayor Denizac, For; and Mayor Masiarczyk, For.

C. Request for approval of Meadlowlark Drive Right-of-Way Dedication.

Mayor Masiarczyk asked why it was in the City's best interest to except the right-of-way to the Meadowlark Drive property. Mr. Denny stated that the intent was to make the location a public right away. Plans and Development Services Director Chris Bowley stated that making the location a public right-of-way would give people access to the school, provide access to Lake Baton Estates, and to the North for any future development plans.

The Commission discussed access to other developments, the fact that the City would lose a few hundred dollars per year in future tax dollars, future development in the area, and the Commission

asked Mr. Bowley if he recommended approval of the right-of-way. Mr. Bowley replied "yes", that he thought it would benefit the City.

Mayor Masiarczyk opened and closed the public hearing as there were no public comments.

Motion by Commissioner Schleicher, seconded by Commissioner Herzberg to approve the dedication of that portion of Meadowlark Drive right-of-way, extending approximately 510 north of Baton Drive, and the associated Special Warranty Deed.

Motion carried unanimously with members voting as follows: Commissioner Barnaby, For; Commissioner Herzberg, For; Commissioner Nabicht, For; Commissioner Schleicher, For; Commissioner Lowry, For; Vice Mayor Denizac, For; and Mayor Masiarczyk, For.

11. CITY COMMISSION COMMENTS:

a) Commissioner Barnaby commended Ms. Paula Yorker for heading up the SIA Brain Awareness Program, stated that he recently attended the Center for Florida's Government of Excellence Ethics Conference and Attorney General's Sunshine Summit in Orlando where he learned about the Sunshine Law amendments and the Code of Ethics, public service and ethics, violations of the Sunshine law by public servants, the importance of having the trust of the public, and in knowing the rules and how they apply to being a public servant.

b) Commissioner Herzberg reminded everyone of the City's Spooktacular event, mentioned the Pink Heals event and the Fire Department's open house event this past weekend, and she thanked the Fire Department and their families for hosting the events. She discussed the upcoming annual Relay for Life which will occur on April 14, 2013 and suggested Deltona put extra effort into putting a team together to support the event. She discussed the West Volusia Summit, possible topics for the Summit and selecting a date for the Summit. She suggested the Commission consider setting up an open email system where Commissioners share their emails to provide visibility of resident concerns and each Commissioner's projects.

Mayor Masiarczyk replied that an email sharing policy was an issue that should be discussed and that the current policy needs to be looked at. He stated that he would send a letter out to all West Volusia Mayors suggesting that the Mayors select a date and move forward with having the Summit.

c) Commissioner Nabicht stated that several members of the Commission attended the Hispanic Heritage month celebration at the DeBary Golf and Country Club and that Marissa Vasquez's group put on a phenomenal performance at the event. He suggested changing the order of the Commission meeting closing comments to have the City Attorney and City Manager speak before the Commission closing remarks.

After discussion, the Commission concurred that starting at the next Commission meeting, to change the order of closing comments to the City Attorney speaking first, then the City Manager, and followed by the Commission.

Commissioner Nabicht stated that starting October 16, 2013 the City would have a couple navigators at City Hall available to citizens to assist people with looking into the prospects of Affordable Health Care and researching the many plans that are going to be available. He stated that one of his main concerns with the Affordable Health Care Act is if the City did not have navigators available at a central location

that residents may get taken advantage of by people who are not qualified to provide navigator services. He stated that the annual Florida Fallen Firefighter Memorial Service and Prayer Breakfast will be held at the Florida State Firefighters College on October 11, 2013 at 9:00 a.m. and that he would be attending and representing Deltona.

d) Commissioner Lowry stated that he echoed Vice Mayor Denizac's comments on the benefits of having the law enforcement services of the VCSO and mentioned several of the benefits as compared to having a City law enforcement department. He stated that he went on a VCSO ride-along with Officer Cody and that by observing him on duty it was evident why he received an award from the Commission a few months ago. He attended the Hispanic Heritage month celebration at DeBary Golf and Country Club, he visited Principal Atkinson at Pine Ridge High School, and he apologized to the Fire Department for not being able to make it to the Pink Day events. He stated that Columbus Day was coming up, that he is distressed to see many history books being rewritten to besmudge the character of some of the countries founding fathers, that if anyone wanted to know what Christopher Columbus was all about to go on the internet and read his diary, that people should read the things that our founding fathers said to draw their own opinions from and not listen to someone simply because they wrote a book.

e) Commissioner Schleicher stated she attended the Sons of Italy Italian Heritage month dinner and the Hispanic Heritage month dinner, that she was proud to have been adopted by both groups, and that she presented a proclamation in celebration of the Hispanic Heritage month which celebrates the 500th anniversary of the founding of Florida by Ponce de Leon and Spain. It was the 10th anniversary of the Hispanic American Youth Group of Deltona, who was asked to perform for the King and Queen of Spain, they have performed all across Florida, and they received a proclamation from President Obama. She attended the Pink Heals tour where they had a pink fire truck that people could sign with the name of a loved one who has suffered from cancer. She reminded everyone of the upcoming Workshop where the Commission will tour the Deltona Fire stations on Monday, October 14, 2013, and that Sheriff Johnson has invited the Commission to visit with him in November.

f) Vice Mayor Denizac stated that she was concerned that the City did not have a policy in place that would provide a quick "For the Record" response to the Commission pertaining to rumors or to any controversial issues, and she recommended that the Commission receive a quick memorandum or email from staff with detailed first-hand information in response to any current rumors or controversial issues. She stated that she takes exception to having a contract with any business that is being investigated for fraud, and that there should be some type of language in every City contract that if any business is found guilty of fraud that it would be grounds for immediate dismissal of the contract. She stated that the Commission is not in charge of writing contracts and that she wants to make the individuals who write City contracts responsible for the language in those contracts, and responsible for making sure the Commission is getting all the information it needs when an issue comes before the Commission.

The Commission discussed making sure that there was an accountability clause in every City contract, possibly putting the "For the Record" policy concept on a future Workshop agenda, that the Commission's line of communication should be through the City Manager in accordance with the City Charter, and that "City Commission Comments" during Commission meetings should not be misconstrued as a time to cover Workshop type issues.

g) Mayor Masiarczyk stated he wanted to applaud the Public Works Department for completing the

project on Elkcam Boulevard, that both the Fire Department and the VCSO are doing an outstanding job supporting the residents of Deltona, and that he is proud to have both organizations working for the City.

12. CITY ATTORNEY COMMENTS:

Mrs. Vose stated that the City won the hearing and the re-hearing of the Heron Lawsuit which closes the lawsuit, and that about a year ago Ms. Samantha Hughes filed a complaint with the Florida Civil Rights Commission which was dismissed with "no cause" which closes the issue.

13. ACTING CITY MANAGER COMMENTS: None.

14. ADJOURNMENT:

There being no further business, the meeting adjourned at 8:13 p.m.

_____
John Masiarczyk Sr., Mayor

ATTEST:

_____
Mitch Honaker, Deputy City Clerk

AGENDA MEMO

TO: Mayor & City Commission **AGENDA DATE:** 10/21/2013

FROM: William D. Denny, Acting City Manager **AGENDA ITEM:** 5 - A

SUBJECT: Presentation of Certificates of Recognition and Thanks, to the student artists who created the "Think Before You Throw" posters, to help spread the awareness of keeping Deltona clean.

LOCATION: City-wide

BACKGROUND: The City of Deltona and Vice-Mayor Zenaida Denizac officially kicked off the City-wide anti-littering campaign "Think Before You Throw" with a "sign-raising" on Wednesday August 7th in the City Hall Courtyard.

In September, the three Volusia County middle Schools: Deltona, Galaxy and Heritage began their participation in four "Think Before You Throw" poster contests that will take place throughout the 2013-2014 school year. Each school will have its poster contest on a quarterly basis, and tonight, we are recognizing those ten student artists from Deltona Middle School and their Principal Dr. Leslie Sileo and Vice Principal Jonathon Pearce, and their teacher Ms. Antwanette Neal. These selected posters will now be seen in the lobbies of ten businesses in Deltona, through the middle of December.

Catherine Quinones, Grade 7, 12 years old

Nicolle De Hoyos, Grade 8, 13 years old

Autumn Taylor, Grade 8, 13 years old

Nina Shields, Grade 7, 12 years old

Brianna Whaley, Grade 8, 13 years old

Sunna Ferrioli, Grade 8, 13 years old

	McKenzie Oden, Grade 8, 13 years old
	Katherine Cintron, Grade 7, 12 years old
	Serena White, Grade 7, 12 years old
	Jason Cooper, Grade 8, 13 years old
ORIGINATING DEPARTMENT:	City Manager's Office
SOURCE OF FUNDS:	N/A
COST:	N/A
REVIEWED BY:	City Clerk, Acting City Manager
STAFF RECOMMENDATION PRESENTED BY:	N/A - Presentation Only.
POTENTIAL MOTION:	N/A - Presentation Only.
AGENDA ITEM APPROVED BY:	
	_____ William D. Denny, Acting City Manager

AGENDA MEMO

TO: Mayor & City Commission **AGENDA DATE:** 10/21/2013

FROM: William D. Denny, Acting City Manager **AGENDA ITEM:** 5 - B

SUBJECT: Presentation - Quarterly Reports of City Advisory Boards/Committees.

LOCATION:	N/A
BACKGROUND:	Quarterly Reports of City Advisory Boards/Committees: Parks and Recreation Advisory Committee - Written Reports Only. 1) Senior Advisory Sub-Committee 2) Youth Advisory Sub-Committee 3) Citizen Accessibility Advisory Sub-Committee Firefighter's Pension Plan, Board of Trustees - Presented by Lisa Spriggs.
ORIGINATING DEPARTMENT:	City Clerk's Office
SOURCE OF FUNDS:	N/A
COST:	N/A
REVIEWED BY:	City Clerk
STAFF RECOMMENDATION PRESENTED BY:	N/A - Presentation Only.
POTENTIAL MOTION:	N/A - Presentation Only.
AGENDA ITEM APPROVED BY:	_____ William D. Denny, Acting City

	Manager
ATTACHMENTS:	• Parks and Recreation Board Quarterly Reports • FFP Board Quarterly Report

PARKS & RECREATION DEPARTMENT
QUARTERLY REPORT
JULY, AUGUST, SEPTEMBER 2013

Parks & Recreation Advisory Board

Third quarter:

- This board had no meeting for this quarter.

Citizen Accessibility Advisory Sub-Committee

Third quarter:

- This sub-committee completed the Educational Pamphlet and distributed it at various City events including the National Night Out event hosted by the Sheriff's Office. Captain Brannon has also been distributing it from his office whenever there are enquiries.

Youth Advisory Sub-Committee

Third quarter:

- This sub-committee hosted another teen game day at Harris Saxon Community Center as they continued to promote the "Teen Center" growth.
- Members came up with an idea to host a "Fall Dance" to further promote the "Teen Center" concept to the teens in the community.
- Two (2) new members have joined this committee

Senior Advisory Sub-Committee

Third quarter:

- This sub-committee successfully planned and hosted the Senior Breakfast at the Deltona Community Center with 172 tickets sold for this event.
- They finalized plans for the Arts & Crafts Festival in the Fall.

Respectfully submitted,
Steve Moore, Director
Parks and Recreation Department

City of Deltona, Firefighters' Pension Plan
Board of Trustees Quarterly Report
Quarter Ended September 30, 2013

Board of Trustees:

- City Commission Appointees (terms expire January 2017):
  - Darien LaBoy – original appointment June 2013
  - Janet Deyette – original appointment September 2013
- Active plan member appointees (terms expire January 2017):
  - Kurt Vroman, – original appointment January 2009
  - Frank Snyder – original appointment October 2011
- Trustee Appointee (term expires January 2014**):**
  - James Koczan – original appointment February 2008

Quarterly Administration Highlights:

1. **Investments as of September 30, 2013 Totaled $17,466,683:**
   a. Cash & Equivalents $949,987
   b. Equities $6,450,715
   c. Mutual Funds $5,728,092
   d. Fixed Income $4,337,889
2. **2012 Annual State Report Filed –** The Plan is required to file a report annually to the Florida Department of Management Services, Division of Retirement, Municipal Police Officers' and Firefighters' Retirement Trust Funds' Office. The report provides detailed financial data for the Plan year ended September 30, 2012 and demonstrates compliance with all provisions of the state statute chapter 175 as required. The report was approved and acceptance by the State that all statutory requirements have been met. The City is has received $429,488 in annual Insurance Premium Tax to assist in funding the Plan.
3. **Ordinance Revisions-** Based on Article 36 of the City's Contract with Local 2913, the Board has formulated a recommendation that would enhance benefits of the current pension plan utilizing the available state premium tax dollars restricted for such purpose to pay for the proposed enhancements. The Plan Attorney has drafted an Ordinance containing the proposed revisions, which was reviewed by the Board on October 15, 2013 at their quarterly meeting.
4. **Quarterly Board Meeting –** The next quarterly meeting of the Board of Trustees will be held January 21, 2014 at 3:00pm at the Deltona Municipal Complex.

October 21, 2013

AGENDA MEMO

TO: Mayor & City Commission **AGENDA DATE:** 10/21/2013

FROM: William D. Denny, Acting City Manager **AGENDA ITEM:** 7 - A

SUBJECT: Request for approval of renewal of Physio-Control, Inc. Technical Service Support Agreement.

LOCATION:	N/A
BACKGROUND:	Physio-Control, Inc. is the sole source provider for LifePak Cardiac Monitors, Our technical support agreement is up for renewal for services from October 1, 2013 through October 30, 2016. The total cost is $33,767.29 payable in annual installments of $11,255.76. The agreement includes standard repairs, upgrades, power adapters, battery replacements and software updates that help to ensure the devices are in a state of optimum readiness.
ORIGINATING DEPARTMENT:	Fire Administration
SOURCE OF FUNDS:	General Fund
COST:	$11,255.76
REVIEWED BY:	Finance Director, City Attorney
STAFF RECOMMENDATION PRESENTED BY:	Robert Staples, Fire Chief - Recommendation is being made to enter into an agreement with Physio-Control for a period from October 1, 2013 through October 30, 2016, if funds are appropriated for each subsequent fiscal year, for a technical services support agreement for the Life Pak Cardiac Monitors.
POTENTIAL MOTION:	"I move to approve entering into an agreement with Physio-Control for a period from October 1, 2013 through October 30, 2016, if funds are appropriated for each subsequent fiscal year, for a technical services support agreement for the

	Life Pak Cardiac Monitors."
AGENDA ITEM APPROVED BY:	
	William D. Denny, Acting City Manager
ATTACHMENTS:	• Technical Service Support Agreement

TECHNICAL SERVICE SUPPORT AGREEMENT

Contract Number:

End User # 01658301
DELTONA FIRE RESCUE
1685 PROVIDENCE BLVD
DELTONA, FL 32725

Bill To # 01658302
CITY OF DELTONA
2345 PROVIDENCE BLVD
DELTONA, FL 32725

This Technical Service Support Agreement begins on 10/1/2013 and expires on 10/30/2016.

The designated Covered Equipment and/or Software is listed on Schedule A. This Technical Service Agreement is subject to the Terms and Conditions on the reverse side of this document and any Schedule B, if attached. If any Data Management Support and Upgrade Service is included on Schedule A then this Technical Service Support Agreement is also subject to Physio-Control's Data Management Support and Upgrade Service Terms and Conditions, rev 7/99-1.

Price of coverage specified on Schedule A is $33,767.29 per term, payable in Annual installments.

Special Terms

15% DISCOUNT ON ACCESSORIES
15% DISCOUNT ON ALL ELECTRODES

Accepted: Physio-Control, Inc.

By:

Title:

Date:

Customer:

By:

Print:

Title:

Date:

Purchase Order Number:

Territory Rep: EAVV54
Chad Weakley
Phone: 800-442-1142-2440
FAX: 800-772-3340

Customer Contact:
Russell Rafferty
Phone: 386-878-8570
FAX: 386-878-8501

Reference Number: V54-2068
Printed: 9/27/2013

Renewal
Page 1 of 6

PHYSIO-CONTROL, INC.
TECHNICAL SERVICE SUPPORT AGREEMENT TERMS AND CONDITIONS

Customer's signature or purchase order referencing this Technical Service Support Agreement are required prior to Physio-Control s acceptance of this Agreement. This Agreement covers only the equipment listed on Schedule A ("Covered Equipment"). These terms constitute the complete agreement between the parties and they shall govern over any other documents. These terms may not be revised in any manner without the prior written consent of Physio-Control.

SERVICES. The services provided under this Agreement are set forth on Schedule A. Physio-Control strives to return service calls within two (2) hours, and strives to resolve service issues within twenty-four (24) hours. Following service, Physio-Control will provide Customer with a written report of actions taken or recommended and identification of any materials replaced or recommended for replacement. The following services are available:

"*Repair Only Service*" means repairs, Battery Replacement Service, parts and labor necessary to restore Covered Equipment to original specifications, subject to Exclusions.

"*Inspection Only Service*" means inspections of Covered Equipment to verify proper device calibration, mechanical operations and output measurements, electrical safety check in accordance with National Fire Protection Association (NFPA) guidelines and labor, subject to Exclusions

"*Repair and Inspect Service*" means repairs, Battery Replacement Service, parts and labor necessary to restore Covered Equipment to original specifications, and inspections to verify proper device calibration, mechanical operations and output measurements, electrical safety check in accordance with NFPA guidelines and Updates (as set forth below), subject to Exclusions.

"*Battery Replacement Service*" means replacement of batteries on a one-for-one, like-for-like basis, up to the number of batteries and/or devices listed in Schedule A. Only batteries manufactured or distributed by Physio-Control are eligible for replacement Battery replacement is available upon Customer notification to Physio-Control of the occurrence of:

(i) Battery failure as determined by Customer's performance testing and evaluation in accordance with the applicable Operating Instructions; or
(ii) The end of the useful life of the battery as set forth in the applicable Operating Instructions

At the discretion of Physio-Control, battery replacement shall be effected by shipment to Customer and replacement by Customer, or by on-site delivery and replacement by a Physio-Control Service Technician. Upon Customer's receipt of a replacement battery, the battery being replaced shall become the property of Physio-Control, and Customer must return the battery being replaced to Physio-Control for proper disposal. In the event that Physio-Control does not receive the battery, Customer will be charged at the then-current rate for the replacement battery.

"*On-Site Service*" means that a Physio-Control factory-trained technician will provide service at Customer's location. Services will be performed between 8:00am and 5:00pm local time, Monday through Friday, excluding holidays. Customer is to ensure Covered Equipment is available for service at scheduled times. Some service may not be completed On-Site. Physio-Control will cover travel and/or round-trip freight for Covered Equipment that must be sent to our designated service facility for repair.

"*24-hour On-Site Service*" means that a Physio-Control factory-trained technician will provide service at Customer's location at any time, except on the holidays listed above. Customer is to ensure Covered Equipment is available for service at scheduled times. Some service may not be completed On-Site. Physio-Control will cover travel and/or round-trip freight for Covered Equipment that must be sent to our designated service facility for repair.

"*Ship-In Service*" means that service will be performed at Physio-Control's designated service facility. Physio-Control will cover round-trip freight for Covered Equipment that is sent to our designated service facility for repair.

If Covered Equipment is not available as scheduled or Customer requests services or goods not covered by this Agreement or outside of designated service frequency or hours, Physio-Control will charge Customer at Physio-Control's standard labor rates less 10% (including overtime, if appropriate) and applicable travel costs. Parts required for such repairs will be made available at 15% off the then-current list price.

EXCLUSIONS. Unless otherwise specified, this Agreement does not include:

- supply or repair of accessories or disposables
- repair of damage caused by misuse, abuse, abnormal operating conditions, use of batteries or other products not distributed by Physio-Control, operator errors, or acts of God
- case changes
- repair or replacement of items not originally distributed or installed by Physio-Control
- Upgrades and installation of Upgrades
- battery maintenance, performance testing, evaluation, removal and recycling

LOANERS. If Covered Equipment must be removed from service to complete repairs, Physio-Control will provide Customer with a loaner device, if one is available, until the Covered Equipment is returned Customer assumes complete responsibility for the loaner and shall return the loaner at Customer's expense to Physio-Control in the same condition as received, upon the earlier of the return of the removed Covered Equipment or Physio-Control's request

UPDATES "*Update*" means a change to a device to enhance its current features, stability, or software If Repair and Inspect Service is designated for Covered Equipment on Schedule A, Physio-Control will install Updates at no additional cost provided such Updates are installed at the time of regularly scheduled service. If parts must be replaced to accommodate installation of new software, such parts may be purchased at a rate of 30% less than the then-current list price Updates installed on Covered Equipment designated as Repair Only Service, Inspect Only Service, or at a time other than regularly scheduled Repair and Inspect Service will be billed on a separate invoice at the then-current list price less 20%

UPGRADES. "*Upgrade*" means a major, standalone version of software or the addition of features or capabilities to a device. Upgrades must be purchased separately, and are not provided under this Agreement Upgrades are available at a rate of 17% less than the then-current list price

PRICING. Pricing is set forth on the front page of this Agreement. Prices do not include taxes. Sales, service or use taxes will be invoiced in addition to the price of the goods and services covered by this Agreement unless Physio-Control receives a copy of a valid exemption certificate. If the number or configuration of Covered Equipment changes during the Term, pricing shall be pro-rated accordingly. For Inspection Only Service and Repair and Inspect Service, no pricing deduction will be made for removal of Covered Equipment if an inspection has already been performed during the Term. Discounts will not be combined with other special terms, discounts, and/or promotions.

PAYMENT. Payment is due within thirty (30) days of invoice date

WARRANTY. Physio-Control warrants services performed under this Agreement and replacement parts provided in performing such services against defects in material and workmanship for ninety (90) days from the date a service was performed or a part was provided. Customer's sole remedy shall be reservicing the affected unit and/or replacement of any part determined to be defective, without additional charge, provided Customer notifies Physio-Control of any allegedly defective condition within ten (10) calendar days of its discovery by Customer. Physio-Control makes no other warranties, express or implied, including without limitation, **NO WARRANTY OF MERCHANTABILITY OR FITNESS FOR A PARTICULAR PURPOSE, AND IN NO EVENT SHALL PHYSIO-CONTROL BE LIABLE FOR INCIDENTAL, CONSEQUENTIAL, SPECIAL, OR OTHER DAMAGES**.

TERM. The initial Term is set forth on the front page of this Agreement. This Agreement shall automatically renew unless terminated by either party with written notice thirty (30) days prior to the expiration of the then-current term. Prices are subject to change upon renewal.

TERMINATION Either party may terminate this Agreement for material breach by the other party by providing thirty (30) days' written notice to the other party, and provided such breach is not cured within the notice period In addition, either party may terminate this Agreement at any time upon sixty (60) days' prior written notice to the other party. In the event of such early termination Customer shall be responsible for the portion of the designated price which corresponds to the portion of the Term prior to the effective date of termination and the cost of any services rendered during the Term

DELAYS. Physio-Control will not be liable for any loss or damage of any kind due to its failure to perform or delays in its performance resulting from any cause beyond its reasonable control, including, but not limited to, acts of God labor disputes, labor shortages, the requirements of any governmental authority, war, civil unrest, delays in manufacture, obtaining any required license or permit, and Physio-Control's inability to obtain goods from its usual sources Any such delay shall not be considered a breach of Physio-Control's obligations and the performance dates shall be extended for the length of such delay.

DEVICE INSPECTION BEFORE ACCEPTANCE. All devices that are not under Physio-Control Limited Warranty or a current Technical Service Support Agreement must be inspected and repaired (if necessary) to meet original specifications at then-current list prices prior to being covered under a Technical Service Support Agreement

MISCELLANEOUS. (a) Customer agrees to not employ or offer employment to anyone performing services on Physio-Control's behalf during the Term of this Agreement or for one (1) year following its expiration without Physio-Control's prior written consent; (b) this Agreement, and any related obligation of other party, may not be assigned in whole or in part without the prior written consent of the other party; (c) this Agreement shall be governed by the laws of the State in which the service is provided; (d) all costs and expenses incurred by the prevailing party related to the enforcement of its rights under this Agreement, including reasonable attorney's fees shall be reimbursed by the other party

PHYSIO-CONTROL, INC.
TECHNICAL SERVICE SUPPORT AGREEMENT
SCHEDULE A

Contract Number:

Servicing Rep: Chad Weakley, EAVV54
District: SOUTHEAST
Phone: 800-442-1142-2440
FAX: 800-772-3340

Equipment Location: DELTONA FIRE RESCUE, 01658301
1685 PROVIDENCE BLVD
DELTONA, FL 32725

Scope Of Service Renewal POS LP15 5 Year On Site Rpr and 1 Ins per Yr:M-F/8-5

Model	Part Number	Serial Number	Ref. Line	Effective Date	Expiration Date	Total Inspections
LIFEPAK® 15	V15-2-000052	39054710	1	10/1/2013	10/30/2016	3
LIFEPAK® 15	V15-2-000052	39054830	2	10/1/2013	10/30/2016	3
LIFEPAK® 15	V15-2-000052	39054833	3	10/1/2013	10/30/2016	3
LIFEPAK® 15	V15-2-000052	39054834	4	10/1/2013	10/30/2016	3
LIFEPAK® 15	V15-2-000052	39054835	5	10/1/2013	10/30/2016	3
LIFEPAK® 15	V15-2-000052	39054836	6	10/1/2013	10/30/2016	3
LIFEPAK® 15	V15-2-000052	39054846	7	10/1/2013	10/30/2016	3
LIFEPAK® 15	V15-2-000052	39054850	8	10/1/2013	10/30/2016	3
LIFEPAK® 15	V15-2-000052	39054851	9	10/1/2013	10/30/2016	3
LIFEPAK® 15	V15-2-000052	39054852	10	10/1/2013	10/30/2016	3

** Denotes an inventory line that has changed since the last contract revision or addendum

MEDTRONIC EMERGENCY RESPONSE SYSTEMS, INC.
TECHNICAL SERVICE SUPPORT AGREEMENT
SCHEDULE A

Contract Number:
Additional Items

Service Type	Item	Quantity	Start Date	End Date
CASE CHANGE	LP12/15/20 CASE CHG 1-9	3	10/1/2013	10/30/2016

** Denotes an additional item line that has changed since the last contract revision or addendum.

PHYSIO-CONTROL, INC.
TECHNICAL SERVICE SUPPORT AGREEMENT
SCHEDULE B

LIFEPAK® 15 Monitor/Defibrillator Repair Service includes:

- Standard detachable hard paddle repairs.
- Replacement or repair of Physio-Control Redi-Charge battery charging systems (Catalog# 11141-000115) on a one-for-one basis with the total number of LP15 Defibrillator/Monitors listed in Schedule A, and as determined necessary by Physio-Control.
- Power Adapter repair/replacement
- Battery Coverage
- Replacement of three (3) LIFEPAK Li-ion Batteries every two (2) years, or upon battery failure

AGENDA MEMO

TO: Mayor & City Commission **AGENDA DATE:** 10/21/2013

FROM: William D. Denny, Acting City Manager **AGENDA ITEM:** 7 - B

SUBJECT: Request for approval to piggyback State of Florida Contract #760-000-10-1 for a Toro Reelmaster 5510 Mower.

LOCATION:	Parks and Recreation
BACKGROUND:	The Commission approved $48,000 in the FY 13/14 budget in the Capital Equipment Fund for the purchase of a Toro Reelmaster 5510 Mower. Wesco Turf Inc. was awarded the Florida State Contract #760-000-10-1 for Toro Turf Equipment at 21% off the list price. The Toro Reelmaster 5510 Mower will be used to mow all nine athletic fields at Dewey Boster Soccer Complex and DuPont Lakes Softball Complex. The Florida State Contract price sheets and proposal from Wesco Turf Inc. are attached.
ORIGINATING DEPARTMENT:	Parks Recreation
SOURCE OF FUNDS:	Capital Equipment
COST:	$47,446.27
REVIEWED BY:	Finance Director, City Attorney
STAFF RECOMMENDATION PRESENTED BY:	Steve Moore, Parks and Recreation Director - Recommendation is being made approve the purchase of a Toro Reelmaster 5510 from Wesco Turf Inc. piggybacking Florida State Contract # 760-000-10-1.
POTENTIAL MOTION:	"I move to approve the purchase of a Toro Reelmaster 5510 from Wesco Turf Inc. piggybacking Florida State Contract # 760-000-10-1."

AGENDA ITEM APPROVED BY:	William D. Denny, Acting City Manager
ATTACHMENTS:	• Wesco Turf Proposal and State Contract information

WESCO TURF INC.
2101 Cantu Court, Sarasota Florida 34232-6242 Phone: (941) 377-6777 Fax (941) 379-9636
300 Technology Park, Lake Mary Florida 32746 Phone: (407) 333-3600 Fax: (407) 732-5039
7037-37 Commonwealth Avenue, Jacksonville, FL 32220 Phone: (904) 783-0500 Fax: (904) 783-3835

City of Deltona
Steve Moore
2345 Providence Rd
Cdeltona FL 32745

Please note: All pricing is valid for thirty (30) days

REFERENCE: STATE CONTRACT #760-000-10-1

Quote #13-1003 RM5510

October 3 2013

Qty.	Model	Description	TORO MSRP	Disc	State Cont. Price	Extended Price
	Reelmaster 5510 (03680 / 03680N)					
1	03680N	Reelmaster 5510 (03680 / 03680N,	$42 777 00		$33 793 83	$ 33 793 83
5	03696	8-Blade Fairway DPA (Radial) Cutti	$3,112 00		$2,458 48	$ 12,292 40
1	110-8860	2 Post ROPS Kit	$674 31		$674 31	$ 674 31
1	120-5179	Cover-Seat, Large	$36 73		$36 73	$ 36 73
1	CT2	Cool Top Canopy with Operator Do	$649 00		$649 00	$ 649.00
		Total Price for 1 Unit(s)				**$ 47,446.27**

Terms: Net 30

Equipment Total	$ 47,446 27
State Sales Tax (6% + .5% County Surtax)	Tax Exempt
Total	**$ 47,446.27**

Please indicate your acceptance of this quote as an order by signing below and returning via fax to Wesco Turf, Inc. at 866-348-9981 or 407-732-5039.
Please include your preference for Height of Cut where applicable.

Steve Moore **Date**
City of Deltona

The above quote meets or exceeds ANSI Safety Specification. Toro Commercial Equipment carries a two-year or 1500 hour warranty Toro Consumer / Landscape Contractor Equipment carries a one-year limited warranty

The preceding pricing is good for 30 days, not including Florida Sales Tax after which time new pricing would have to be submitted. Also included in the pricing is training as needed for your Service Technicians Time of delivery may vary; please check when placing order All payments are subject to state and local taxes if any

Thank you for considering Wesco Turf, Inc for your equipment needs If I can be of any further assistance please do not hesitate to contact me

Sincerely,

Bill Wallace

Bill Wallace
Territory Manager
Sports Fields & Grounds Division
Lake Mary
321-403-1074

State Term Contract No. 760-000-10-1; Construction, Industrial, Agricultural, & Lawn Equipment

Section 7.1, Price Sheet & Ordering Instructions

(REVISED: July 3, 2013)

NOTE TO ELIGIBLE USERS: To fully use this document, you must maintain an active internet connection (high-speed recommended) and have the latest version of the Adobe Reader installed. If you need the free Adobe Reader, go to http://www.adobe.com/, click on the "Get Adobe Reader" icon, and follow the software's directions for installation and use. Printing this document will not automatically print any linked documents. To print any of the linked documents, you must individually open and print the linked documents.

VIEWING NOTE: Due to the width and height of this document and the available screen space of your monitor, you may need to scroll across and up-and-down this document to view all available columns and rows. To scroll across this document, you can use the scroll bar in the bottom right of this window; to scroll up-and-down this document, you can use the scroll bar at the right of this window.

KEY NOTE: For additional information related to this document, please see the Key toward the bottom of this document.

INDEX

INDEX NOTE: For specific group information, please see the individual Group areas listed below the Index.

*: Applicable Commodity Codes are provided for general information purposes only. Eligible Users must confirm the appropriate and applicable Commodity Code(s) to be used.

GROUP	APPLICABLE COMMODITY CODE(S)*	GROUP DESCRIPTION
Group No. 1	760-360	CONSTRUCTION/INDUSTRIAL, MOTOR GRADER & MAINTAINER
Group No. 2	760-840	CONSTRUCTION/INDUSTRIAL, EXCAVATOR: CRAWLER/TRACK, WHEEL, & TRUCK MOUNTED
Group No. 3	760-900	CONSTRUCTION/INDUSTRIAL, DOZER: CRAWLER/TRACK & WHEEL
Group No. 4	760-420	CONSTRUCTION/INDUSTRIAL, LOADER: CRAWLER/TRACK
Group No. 5	760-460	CONSTRUCTION/INDUSTRIAL, LOADER: SKID STEER
Group No. 6	760-480	CONSTRUCTION/INDUSTRIAL, LOADER: WHEEL
Group No. 7	760-960	CONSTRUCTION/INDUSTRIAL, BACKHOE-LOADER: CRAWLER/TRACK & WHEEL
Group No. 8	560-650	FORKLIFT/TELESCOPIC HANDLER, RIDING TYPE (INCLUDING ROUGH TERRAIN)
Group No. 9	765-900	TRACTOR, AGRICULTURAL/SPECIALTY: CRAWLER/TRACK & WHEEL (INCLUDING 4WD)
Group No. 10	765-900	TRACTOR, UTILITY: CRAWLER/TRACK & WHEEL (EQUAL TO OR GREATER THAN 40 HP)
Group No. 11	765-900	TRACTOR, COMPACT UTILITY: CRAWLER/TRACK & WHEEL (LESS THAN 40 HP)
Group No. 12	071-860	UTILITY VEHICLE, OFF-ROAD: PASSENGER, CARGO, INDUSTRIAL, & TURF (NOT INCLUDING LOW-SPEED VEHICLE ("LSV") OR NEIGHBORHOOD ELECTRIC VEHICLE ("NEV"))
Group No. 13	071-820	ALL TERRAIN VEHICLE ("ATV")
Group No. 14	071-840	AMPHIBIOUS ALL TERRAIN VEHICLE ("AATV")
Group No. 15	020-010, 020-030, 020-150, 020-360, 020-660, 020-670, 515-070, 515-140, 515-210, 515-280, 515-350, 515-490, 515-700, 515-770, 515-860, 765-430, 765-640, Etc.	ACCESSORY & IMPLEMENT, MOWER/TRACTOR/VEHICLE/EQUIPMENT MOUNTED OR TOWED: INCLUDING AERATOR, BACKHOE, BLOWER, BOX BLADE, CATCHER, CHIPPER/SHREDDER, DETHATCHER, DOZER BLADE, EDGER, GRINDER, LOADER, MATERIAL HANDLING (E.G., FORKS), MOWER/CUTTER (FINISHING, FLAIL, ROTARY, SICKLE, & REEL TYPES; BOOM MOUNTED OR PULL BEHIND), PAINTER, PLOW, POSTHOLE DIGGER, PULVERIZER, RAKE, SEEDER, SOD CUTTER, SPIKER, SPLITTER, SPRAYER, SPREADER, TILLER, TOPDRESSER, TRENCHER, TRIMMER, & VACUUM
Group No. 16	020-660, 515-070, 515-140, 515-210, 515-350, 515-490, 515-700, 515-770, 545-680, Etc.	LAWN EQUIPMENT; STANDING, HAND-HELD, BACKPACK, & WALK/WORK-BEHIND: INCLUDING AERATOR, BLOWER, CHAIN SAW, CHIPPER/SHREDDER, EDGER, GRINDER, PAINTER, OVERSEEDER, RAKE, SEEDER, SOD CUTTER, TILLER, TOPDRESSER, TRIMMER, & VACUUM (NOT INCLUDING MOWER)
Group No. 17	515-630	MOWER, LAWN, WALK/STAND-BEHIND, OCCASIONAL/RESIDENTIAL TYPE
Group No. 18	515-630	MOWER, LAWN, WALK/STAND-BEHIND, PROFESSIONAL/COMMERCIAL TYPE
Group No. 19	515-630	MOWER/TRACTOR, LAWN, RIDING TYPE
Group No. 20	515-630	MOWER/TRACTOR, LAWN & GARDEN, RIDING TYPE
Group No. 21	515-630	MOWER, FRONT (REAR WHEEL STEERING), RIDING TYPE
Group No. 22	515-630	MOWER, ZERO TURN RADIUS, RIDING TYPE
Group No. 23	515-630	MOWER, WIDE-AREA, RIDING TYPE

Group No. 24	515-900	GOLF & TURF EQUIPMENT, OTHER (NOT INCLUDED IN OTHER GROUPS)

GROUP NO. 1; CONSTRUCTION/INDUSTRIAL, MOTOR GRADER & MAINTAINER

LINE NO.	MANUFACTURER / BRAND NAME	ORGANIZATION NAME[1]	BASE EQUIPMENT MSRP DISCOUNT[2] [##.##%]	OEM OPTIONS, ACCESSORIES, & IMPLEMENTS MSRP DISCOUNT[3] [##.##%]	OEM PARTS MSRP DISCOUNT[4] [##.##%]	MSRP LIST[5] [INCLUDE: MSRP LIST NAME, MSRP LIST DATE, & MSRP LIST PAGES / SECTIONS]
1	Case	Trekker Tractor, LLC	37.00%	30.00%	N/A	Case 2012 - Authorized Price List.
2	Caterpillar	Ring Power Corporation	32.30%	34.00%	N/A	Caterpillar 2012 - Authorized Price List
3	John Deere	Nortrax Equipment Company SE LP	41.76%	40.50%	N/A	Deere Construction 2013 - Authorized Price List
4	LeeBoy	Ring Power Corporation	7.25%	11.00%	N/A	LeeBoy 2012 - Authorized Price List
5	NOR/AM	Nortrax Equipment Company SE LP	20.16%	19.00%	N/A	Noram 2013 - Authorized Price List

GROUP NO. 2; CONSTRUCTION/INDUSTRIAL, EXCAVATOR: CRAWLER/TRACK, WHEEL, & TRUCK MOUNTED

LINE NO.	MANUFACTURER / BRAND NAME	ORGANIZATION NAME[1]	BASE EQUIPMENT MSRP DISCOUNT[2] [##.##%]	OEM OPTIONS, ACCESSORIES, & IMPLEMENTS MSRP DISCOUNT[3] [##.##%]	OEM PARTS MSRP DISCOUNT[4] [##.##%]	MSRP LIST[5] [INCLUDE: MSRP LIST NAME, MSRP LIST DATE, & MSRP LIST PAGES / SECTIONS]
1	Bobcat	Bobcat Company	30.00%	30.00%	0.00%	Bobcat 2013 - Authorized Price List
2	Case	Trekker Tractor, LLC	39.00%	30.00%	N/A	Case 2012 - Authorized Price List.
3	Caterpillar	Ring Power Corporation	19.50%	22.00%	N/A	Caterpillar 2012 - Authorized Price List
4	Gradall	Gradall Industries, Inc.	4.00%	4.00%	N/A	Name: Excavator Pricing, SP-73, Date: April 26, 2012, Sections: Highway Speed Wheeled Excavators; Rough Terrain Wheeled Excavators; Crawler Excavators; Options Pricing; Attachment Pricing
5	Hitachi	Nortrax Equipment Company SE LP	17.50%	16.50%	N/A	Hitachi 2013 - Authorized Price List
6	John Deere	Nortrax Equipment Company SE LP	45.28%	44.28%	N/A	Deere Construction 2013 - Authorized Price List
7	Kobelco	G S Equipment, Inc.	23.00%	12.50%	N/A	Kobelco 2012 - Authorized Price List to be Linked.
8	Kubota	Triple D Equipment, Inc.	24.50%	15.00%	8.50%	Kubota 2013 - Authorized Price List

GROUP NO. 3; CONSTRUCTION/INDUSTRIAL, DOZER: CRAWLER/TRACK & WHEEL

LINE NO.	MANUFACTURER / BRAND NAME	ORGANIZATION NAME[1]	BASE EQUIPMENT MSRP DISCOUNT[2] [##.##%]	OEM OPTIONS, ACCESSORIES, & IMPLEMENTS MSRP DISCOUNT[3] [##.##%]	OEM PARTS MSRP DISCOUNT[4] [##.##%]	MSRP LIST[5] [INCLUDE: MSRP LIST NAME, MSRP LIST DATE, & MSRP LIST PAGES / SECTIONS]
1	Case	Trekker Tractor, LLC	40.00%	30.00%	N/A	Case 2012 - Authorized Price List.
2	Caterpillar	Ring Power Corporation	23.00%	26.00%	N/A	Caterpillar 2012 - Authorized Price List
3	John Deere	Nortrax Equipment Company SE LP	32.00%	30.00%	N/A	Deere Construction 2013 - Authorized Price List

GROUP NO. 4; CONSTRUCTION/INDUSTRIAL, LOADER: CRAWLER/TRACK

LINE NO.	MANUFACTURER / BRAND NAME	ORGANIZATION NAME[1]	BASE EQUIPMENT MSRP DISCOUNT[2] [##.##%]	OEM OPTIONS, ACCESSORIES, & IMPLEMENTS MSRP DISCOUNT[3] [##.##%]	OEM PARTS MSRP DISCOUNT[4] [##.##%]	MSRP LIST[5] [INCLUDE: MSRP LIST NAME, MSRP LIST DATE, & MSRP LIST PAGES / SECTIONS]
1	Bobcat	Bobcat Company	30.00%	30.00%	0.00%	Bobcat 2013 - Authorized Price List
2	Case	Trekker Tractor, LLC	32.00%	30.00%	N/A	Case 2012 - Authorized Price List.
3	Caterpillar	Ring Power Corporation	18.00%	20.00%	N/A	Caterpillar 2012 - Authorized Price List
4	John Deere	John Deere Construction Retail Sales	20.00%	20.00%	N/A	Deere Construction 2013 - Authorized Price List

GROUP NO. 5; CONSTRUCTION/INDUSTRIAL, LOADER: SKID STEER

LINE NO.	MANUFACTURER / BRAND NAME	ORGANIZATION NAME[1]	BASE EQUIPMENT MSRP DISCOUNT[2] [##.##%]	OEM OPTIONS, ACCESSORIES, & IMPLEMENTS MSRP DISCOUNT[3] [##.##%]	OEM PARTS MSRP DISCOUNT[4] [##.##%]	MSRP LIST[5] [INCLUDE: MSRP LIST NAME, MSRP LIST DATE, & MSRP LIST PAGES / SECTIONS]
1	Bobcat	Bobcat Company	30.00%	30.00%	0.00%	Bobcat 2013 - Authorized Price List
2	Case	Trekker Tractor, LLC	37.00%	30.00%	N/A	Case 2012 - Authorized Price List.
3	Caterpillar	Ring Power Corporation	25.75%	28.00%	N/A	Caterpillar 2012 - Authorized Price List
4	John Deere	John Deere Construction Retail Sales	28.00%	20.00%	N/A	Deere Construction 2013 - Authorized Price List

GROUP NO. 6; CONSTRUCTION/INDUSTRIAL, LOADER: WHEEL

LINE NO.	MANUFACTURER / BRAND NAME	ORGANIZATION NAME[1]	BASE EQUIPMENT MSRP DISCOUNT[2] [##.##%]	OEM OPTIONS, ACCESSORIES, & IMPLEMENTS MSRP DISCOUNT[3] [##.##%]	OEM PARTS MSRP DISCOUNT[4] [##.##%]	MSRP LIST[5] [INCLUDE: MSRP LIST NAME, MSRP LIST DATE, & MSRP LIST PAGES / SECTIONS]
1	Case	Trekker Tractor, LLC	42.00%	35.00%	N/A	Case 2012 - Authorized Price List.
2	Caterpillar	Ring Power Corporation	23.50%	26.50%	N/A	Caterpillar 2012 - Authorized Price List
3	John Deere	Nortrax Equipment Company SE LP	40.00%	39.00%	N/A	Deere Construction 2013 - Authorized Price List
4	Kawasaki	G S Equipment, Inc.	26.50%	12.50%	N/A	Kawasaki 2012 - Authorized Price List
5	Kubota	Triple D Equipment, Inc.	20.10%	15.00%	8.50%	Kubota 2013 - Authorized Price List

GROUP NO. 7; CONSTRUCTION/INDUSTRIAL, BACKHOE-LOADER: CRAWLER/TRACK & WHEEL

LINE NO.	MANUFACTURER / BRAND NAME	ORGANIZATION NAME[1]	BASE EQUIPMENT MSRP DISCOUNT[2] [##.##%]	OEM OPTIONS, ACCESSORIES, & IMPLEMENTS MSRP DISCOUNT[3] [##.##%]	OEM PARTS MSRP DISCOUNT[4] [##.##%]	MSRP LIST[5] [INCLUDE: MSRP LIST NAME, MSRP LIST DATE, & MSRP LIST PAGES / SECTIONS]
1	Case	Trekker Tractor, LLC	46.00%	35.00%	N/A	Case 2012 - Authorized Price List.
2	Caterpillar	Ring Power Corporation	25.00%	28.00%	N/A	Caterpillar 2012 - Authorized Price List
3	John Deere	Nortrax Equipment Company SE LP	41.00%	40.00%	N/A	Deere Construction 2013 - Authorized Price List
4	Kubota	Triple D Equipment, Inc.	21.50%	15.00%	8.50%	Kubota 2013 - Authorized Price List

GROUP NO. 8; FORKLIFT/TELESCOPIC HANDLER, RIDING TYPE (INCLUDING ROUGH TERRAIN)

LINE NO.	MANUFACTURER / BRAND NAME	ORGANIZATION NAME[1]	BASE EQUIPMENT MSRP DISCOUNT[2] [##.##%]	OEM OPTIONS, ACCESSORIES, & IMPLEMENTS MSRP DISCOUNT[3] [##.##%]	OEM PARTS MSRP DISCOUNT[4] [##.##%]	MSRP LIST[5] [INCLUDE: MSRP LIST NAME, MSRP LIST DATE, & MSRP LIST PAGES / SECTIONS]
1	Bobcat	Bobcat Company	24.00%	24.00%	0.00%	Bobcat 2013 - Authorized Price List
2	Case	Trekker Tractor, LLC	41.00%	30.00%	N/A	Case 2012 - Authorized Price List.
3	Caterpillar	Ring Power Corporation	30.00%	33.00%	N/A	2012 - Authorized Price List to be Linked
4	Clark	Ring Power Corporation	17.00%	20.00%	N/A	
5	Liftking	Ring Power Corporation	10.00%	14.00%	N/A	2012 - Authorized Price List to be Linked
6	Linde	Ring Power Corporation	27.00%	30.00%	N/A	2012 - Authorized Price List to be Linked
7	Manitou	Ring Power Corporation	12.60%	16.60%	N/A	2012 - Authorized Price List to be Linked
8	Mitsubishi	Ring Power Corporation	29.00%	32.00%	N/A	2012 - Authorized Price List to be Linked
9	Nasco	Nortrax Equipment Company SE LP	2.00%	2.00%	N/A	Not Available
10	New Holland	CNH America LLC	24.00%	24.00%	0.00%	New Holland 2012- Authorized Price List
11	Nissan	Kelly Tractor Co.	30.00%	30.00%	N/A	Nissan 2012 - Authorized Price List
12	Yale	ADM Ventures, Inc. dba Yale Lift Trucks of Florida & Georgia	29.00%	15.00%	15.00%	Yale 2012 - Authorized Price List

GROUP NO. 9; TRACTOR, AGRICULTURAL/SPECIALTY: CRAWLER/TRACK & WHEEL (INCLUDING 4WD)

LINE NO.	MANUFACTURER / BRAND NAME	ORGANIZATION NAME[1]	BASE EQUIPMENT MSRP DISCOUNT[2] [##.##%]	OEM OPTIONS, ACCESSORIES, & IMPLEMENTS MSRP DISCOUNT[3] [##.##%]	OEM PARTS MSRP DISCOUNT[4] [##.##%]	MSRP LIST[5] [INCLUDE: MSRP LIST NAME, MSRP LIST DATE, & MSRP LIST PAGES / SECTIONS]
1	Fecon	Ring Power Corporation	2.50%	5.00%	N/A	2012 - Authorized Price List to be Linked
2	John Deere	John Deere Company - A Division of Deere & Company (C&CE Division)	22.00%	22.00%	N/A	John Deere Agricultural 2013 - Authorized Price List
3	Kubota	Triple D Equipment, Inc.	20.75%	15.00%	8.50%	Kubota 2013 - Authorized Price List
4	New Holland	CNH America LLC	28.00%	28.00%	0.00%	New Holland 2012- Authorized Price List

GROUP NO. 10; TRACTOR, UTILITY: CRAWLER/TRACK & WHEEL (EQUAL TO OR GREATER THAN 40 HP)						
LINE NO.	MANUFACTURER / BRAND NAME	ORGANIZATION NAME[1]	BASE EQUIPMENT MSRP DISCOUNT[2] [##.##%]	OEM OPTIONS, ACCESSORIES, & IMPLEMENTS MSRP DISCOUNT[3] [##.##%]	OEM PARTS MSRP DISCOUNT[4] [##.##%]	MSRP LIST[5] [INCLUDE: MSRP LIST NAME, MSRP LIST DATE, & MSRP LIST PAGES / SECTIONS]
1	Challenger	Ring Power Corporation	16.36%	19.86%	N/A	Challenger 2012 - Authorized Price List
2	Cub Cadet	Robinson Outdoors, Inc	20.00%	10.00%	10.00%	2012 - Authorized Price List to be Linked
3	John Deere	John Deere Company - A Division of Deere & Company (C&CE Division)	14.00%	14.00%	N/A	John Deere 2013 - Authorized Price List A2
4	Kubota	Triple D Equipment, Inc.	20.75%	15.00%	8.50%	Kubota 2013 - Authorized Price List
5	New Holland	CNH America LLC	21.00%	21.00%	0.00%	New Holland 2012- Authorized Price List

GROUP NO. 11; TRACTOR, COMPACT UTILITY: CRAWLER/TRACK & WHEEL (LESS THAN 40 HP)						
LINE NO.	MANUFACTURER / BRAND NAME	ORGANIZATION NAME[1]	BASE EQUIPMENT MSRP DISCOUNT[2] [##.##%]	OEM OPTIONS, ACCESSORIES, & IMPLEMENTS MSRP DISCOUNT[3] [##.##%]	OEM PARTS MSRP DISCOUNT[4] [##.##%]	MSRP LIST[5] [INCLUDE: MSRP LIST NAME, MSRP LIST DATE, & MSRP LIST PAGES / SECTIONS]
1	Cub Cadet	Robinson Outdoors, Inc	20.00%	10.00%	10.00%	2012 - Authorized Price List to be Linked
2	John Deere	John Deere Company - A Division of Deere & Company (C&CE Division)	17.00%	17.00%	N/A	John Deere 2013 - Authorized Price List C20
3	Kubota	Triple D Equipment, Inc.	20.75%	15.00%	8.50%	Kubota 2013 - Authorized Price List
4	New Holland	CNH America LLC	21.00%	21.00%	0.00%	New Holland 2012- Authorized Price List
5	Ventrac	Gulf Coast Turf and Tractor LLC dba Gulf Coast Tractor and Equipment	14.00%	8.00%	8.00%	2012 - Authorized Price List to be Linked

GROUP NO. 12; UTILITY VEHICLE, OFF-ROAD: PASSENGER, CARGO, INDUSTRIAL, & TURF (NOT INCLUDING LOW-SPEED VEHICLE ("LSV") OR NEIGHBORHOOD ELECTRIC VEHICLE ("NEV"))						
LINE NO.	MANUFACTURER / BRAND NAME	ORGANIZATION NAME[1]	BASE EQUIPMENT MSRP DISCOUNT[2] [##.##%]	OEM OPTIONS, ACCESSORIES, & IMPLEMENTS MSRP DISCOUNT[3] [##.##%]	OEM PARTS MSRP DISCOUNT[4] [##.##%]	MSRP LIST[5] [INCLUDE: MSRP LIST NAME, MSRP LIST DATE, & MSRP LIST PAGES / SECTIONS]
1	American SportWorks	American SportWorks LLC	10.00%	10.00%	10.00%	American SportWorks 2012 - Authorized Price List
2	Bobcat	Bobcat Company	20.00%	20.00%	0.00%	Bobcat 2013 - Authorized Price List
3	Cub Cadet	Robinson Outdoors, Inc	20.00%	10.00%	10.00%	2012 - Authorized Price List to be Linked
4	Gravely	Ariens Company - Gravely	15.00%	15.00%	10.00%	Gravely 2013 - Authorized Price List
5	John Deere	John Deere Company - A Division of Deere & Company (C&CE Division)	14.00%	14.00%	N/A	John Deere 2013 - Authorized Price List_C40, C41, C42, C47
6	Kawasaki	Gulf Coast Turf and Tractor LLC dba Gulf Coast Tractor and Equipment	10.00%	8.00%	8.00%	Kawasaki 2012 - Authorized Price List
7	Kubota	Triple D Equipment, Inc.	21.15%	15.00%	8.50%	Kubota 2013 - Authorized Price List
8	New Holland	CNH America LLC	10.00%	10.00%	0.00%	New Holland 2012- Authorized Price List
9	Toro	Wesco Turf, Inc.	21.00%	21.00%	N/A	Toro 2013 - Authorized Price List

GROUP NO. 13; ALL TERRAIN VEHICLE ("ATV")						
LINE NO.	MANUFACTURER / BRAND NAME	ORGANIZATION NAME[1]	BASE EQUIPMENT MSRP DISCOUNT[2] [##.##%]	OEM OPTIONS, ACCESSORIES, & IMPLEMENTS MSRP DISCOUNT[3] [##.##%]	OEM PARTS MSRP DISCOUNT[4] [##.##%]	MSRP LIST[5] [INCLUDE: MSRP LIST NAME, MSRP LIST DATE, & MSRP LIST PAGES / SECTIONS]

GROUP NO. 14; AMPHIBIOUS ALL TERRAIN VEHICLE ("AATV")						
LINE NO.	MANUFACTURER / BRAND NAME	ORGANIZATION NAME[1]	BASE EQUIPMENT MSRP DISCOUNT[2] [##.##%]	OEM OPTIONS, ACCESSORIES, & IMPLEMENTS MSRP DISCOUNT[3] [##.##%]	OEM PARTS MSRP DISCOUNT[4] [##.##%]	MSRP LIST[5] [INCLUDE: MSRP LIST NAME, MSRP LIST DATE, & MSRP LIST PAGES / SECTIONS]

GROUP NO. 15; ACCESSORY & IMPLEMENT, MOWER/TRACTOR/VEHICLE/EQUIPMENT MOUNTED OR TOWED: INCLUDING AERATOR, BACKHOE, BLOWER, BOX BLADE, CATCHER, CHIPPER/SHREDDER, DETHATCHER, DOZER BLADE, EDGER, GRINDER, LOADER, MATERIAL HANDLING (E.G., FORKS), MOWER/CUTTER (FINISHING, FLAIL, ROTARY, SICKLE, & REEL TYPES; BOOM MOUNTED OR PULL BEHIND), PAINTER, PLOW, POSTHOLE DIGGER, PULVERIZER, RAKE, SEEDER, SOD CUTTER, SPIKER, SPLITTER, SPRAYER, SPREADER, TILLER, TOPDRESSER, TRENCHER, TRIMMER, & VACUUM					
LINE NO.	MANUFACTURER / BRAND NAME	ORGANIZATION NAME[1]	BASE EQUIPMENT MSRP DISCOUNT[3] [##.##%]		OEM PARTS MSRP DISCOUNT[4] [##.##%]	MSRP LIST[5] [INCLUDE: MSRP LIST NAME, MSRP LIST DATE, & MSRP LIST PAGES / SECTIONS]
1	Alamo	Alamo Industrial dba Alamo Sales Corp.	13.00%		10.00%	Alamo Sales Corp 2013 - Authorized Price List
2	American SportWorks	American SportWorks LLC	10.00%		10.00%	American SportWorks 2012 - Authorized Price List
3	Bear Cat	Florida Outdoor Equipment, Inc.	15.00%		N/A	Bearcat 2013 - Authorized Price List
4	Bobcat	Bobcat Company	24.00%		0.00%	Bobcat 2013 - Authorized Price List
5	Case	Trekker Tractor, LLC	20.00%		N/A	Case 2012 - Authorized Price List.
6	Caterpillar	Ring Power Corporation	7.00%		9.00%	2012 - Authorized Price List to be Linked
7	Challenger	Ring Power Corporation	10.36%		10.36%	2012 - Authorized Price List to be Linked
8	Cub Cadet	Robinson Outdoors, Inc	20.00%		10.00%	2012 - Authorized Price List to be Linked
9	Diamond	Ring Power Corporation	2.00%		16.00%	Diamond 2012 - Authorized Price List
10	Dixie Chopper	Magic Circle Corporation dba Dixie Chopper	20.00%		12.00%	Dixie Chopper 2013 - Authorized Price List
11	Doosan	Kelly Tractor Co.	37.00%		N/A	2012 - Authorized Price List to be Linked
12	Eco-Crusher	Nortrax Equipment Company SE LP	2.00%		N/A	Eco-Crusher Price Sheet Dated November, 2008
13	Fecon	Ring Power Corporation	2.50%		5.00%	2012 - Authorized Price List to be Linked
14	Ferris	Sarlo Power Mowers, Inc.	10.00%		5.00%	2012 - Authorized Price List to be Linked
15	Goosen/Harper	Golf Ventures	11.00%		0.00%	2012 - Authorized Price List to be Linked
16	Grasshopper	Live Oak Lawn Supply, Inc.	10.00%		5.00%	Authorized Price List Link
17	Gravely	Ariens Company - Gravely	22.00%		10.00%	Gravely 2013 - Authorized Price List
18	Honda	Gulf Coast Turf and Tractor LLC dba Gulf Coast Tractor and Equipment	15.00%		8.00%	2012 - Authorized Price List to be Linked
19	Jacobsen Golf & Turf	Golf Ventures	24.00%		0.00%	2012 - Authorized Price List to be Linked
20	John Deere	John Deere Company - A Division of Deere & Company (C&CE Division)	18.00%		N/A	John Deere 2013 - Authorized Price List A9 - C25 - L35
21	Kubota	Triple D Equipment, Inc.	15.00%		8.50%	Kubota 2013 - Authorized Price List
22	Land Pride	Ring Power Corporation	26.85%		27.51%	2012 - Authorized Price List to be Linked
23	LeeBoy	Ring Power Corporation	7.25%		11.00%	2012 - Authorized Price List to be Linked
24	Liftking	Ring Power Corporation	10.00%		14.00%	2012 - Authorized Price List to be Linked
25	New Holland	CNH America LLC	13.00%		0.00%	New Holland 2012- Authorized Price List
26	Nissan	Kelly Tractor Co.	30.00%		N/A	2012 - Authorized Price List to be Linked
27	Redexim	Golf Ventures	3.00%		0.00%	2012 - Authorized Price List to be Linked
28	Scag	Florida Outdoor Equipment, Inc.	22.00%		N/A	Scag 2013 - Authorized Price List
29	Smithco	Golf Ventures	17.00%		0.00%	2012 - Authorized Price List to be Linked
30	Snapper Pro	Sarlo Power Mowers, Inc.	10.00%		5.00%	2012 - Authorized Price List to be Linked

31	Toro	Wesco Turf, Inc.	21.00%		N/A	Toro 2013 - Authorized Price List
32	Turfco	Golf Ventures	11.00%		0.00%	2012 - Authorized Price List to be Linked
33	Ventrac	Gulf Coast Turf and Tractor LLC dba Gulf Coast Tractor and Equipment	14.00%		8.00%	2012 - Authorized Price List to be Linked
34	Vermeer Chippers	Ring Power Corporation	6.50%		10.00%	Vermeer 2012 - Authorized Price List
35	Zanetis	Nortrax Equipment Company SE LP	14.00%		N/A	2012 - Authorized Price List to be Linked

GROUP NO. 16; LAWN EQUIPMENT; STANDING, HAND-HELD, BACKPACK, & WALK/WORK-BEHIND; INCLUDING AERATOR, BLOWER, CHAIN SAW, CHIPPER/SHREDDER, EDGER, GRINDER, PAINTER, OVERSEEDER, RAKE, SEEDER, SOD CUTTER, TILLER, TOPDRESSER, TRIMMER, & VACUUM (NOT INCLUDING MOWER)

LINE NO.	MANUFACTURER / BRAND NAME	ORGANIZATION NAME[1]	BASE EQUIPMENT MSRP DISCOUNT[2] [##.##%]	OEM OPTIONS, ACCESSORIES, & IMPLEMENTS MSRP DISCOUNT[3] [##.##%]	OEM PARTS MSRP DISCOUNT[4] [##.##%]	MSRP LIST[5] [INCLUDE: MSRP LIST NAME, MSRP LIST DATE, & MSRP LIST PAGES / SECTIONS]
1	Bear Cat	Florida Outdoor Equipment, Inc.	15.00%	15.00%	N/A	Bearcat 2013 - Authorized Price List
2	Billy Goat	Florida Outdoor Equipment, Inc.	20.00%	15.00%	N/A	Billy Goat 2013 - Authorized Price List
3	Cub Cadet	Robinson Outdoors, Inc	20.00%	10.00%	10.00%	2012 - Authorized Price List to be Linked
4	Echo	Florida Outdoor Equipment, Inc.	20.00%	15.00%	N/A	Echo 2013 - Authorized Price List
5	Gravely	Ariens Company - Gravely	22.00%	22.00%	10.00%	Gravely 2013 - Authorized Price List
6	Honda	Gulf Coast Turf and Tractor LLC dba Gulf Coast Tractor and Equipment	15.00%	8.00%	8.00%	2012 - Authorized Price List to be Linked
7	Kawasaki	Sarlo Power Mowers, Inc.	5.00%	5.00%	5.00%	2012 - Authorized Price List to be Linked
8	Sarlo	Sarlo Power Mowers, Inc.	25.00%	10.00%	10.00%	2012 - Authorized Price List to be Linked
9	Stihl	Stihl Southeast, Inc.	20.00%	10.00%	10.00%	Stihl-2013- Authorized Price List

GROUP NO. 17; MOWER, LAWN, WALK/STAND-BEHIND, OCCASIONAL/RESIDENTIAL TYPE

LINE NO.	MANUFACTURER / BRAND NAME	ORGANIZATION NAME[1]	BASE EQUIPMENT MSRP DISCOUNT[2] [##.##%]	OEM OPTIONS, ACCESSORIES, & IMPLEMENTS MSRP DISCOUNT[3] [##.##%]	OEM PARTS MSRP DISCOUNT[4] [##.##%]	MSRP LIST[5] [INCLUDE: MSRP LIST NAME, MSRP LIST DATE, & MSRP LIST PAGES / SECTIONS]
1	Cub Cadet	Robinson Outdoors, Inc	20.00%	10.00%	10.00%	2012 - Authorized Price List to be Linked
2	Gravely	Ariens Company - Gravely	22.00%	22.00%	10.00%	Gravely 2013 - Authorized Price List Link
3	Honda	Gulf Coast Turf and Tractor LLC dba Gulf Coast Tractor and Equipment	15.00%	8.00%	8.00%	2012 - Authorized Price List to be Linked
4	John Deere	John Deere Company - A Division of Deere & Company (C&CE Division)	0.00%	0.00%	N/A	John Deere-2013 Authorized Price List_L15

GROUP NO. 18; MOWER, LAWN, WALK/STAND-BEHIND, PROFESSIONAL/COMMERCIAL TYPE

LINE NO.	MANUFACTURER / BRAND NAME	ORGANIZATION NAME[1]	BASE EQUIPMENT MSRP DISCOUNT[2] [##.##%]	OEM OPTIONS, ACCESSORIES, & IMPLEMENTS MSRP DISCOUNT[3] [##.##%]	OEM PARTS MSRP DISCOUNT[4] [##.##%]	MSRP LIST[5] [INCLUDE: MSRP LIST NAME, MSRP LIST DATE, & MSRP LIST PAGES / SECTIONS]
1	Ferris	Sarlo Power Mowers, Inc.	10.00%	5.00%	5.00%	2012 - Authorized Price List to be Linked
2	Gravely	Ariens Company - Gravely	22.00%	22.00%	10.00%	Gravely 2013 - Authorized Price List
3	Hustler Turf	Excel Industries Inc. dba Hustler Turf Equipment	22.00%	22.00%	N/A	Hustler 2012 - Authorized Price List
4	John Deere	John Deere Company - A Division of Deere & Company (C&CE Division)	14.00%	14.00%	N/A	John Deere 2013 - Authorized Price List_C10
5	Sarlo	Sarlo Power Mowers, Inc.	25.00%	10.00%	10.00%	2012 - Authorized Price List to be Linked
6	Scag	Florida Outdoor Equipment, Inc.	22.00%	15.00%	N/A	Scag 2013 - Authorized Price List
7	Snapper Pro	Sarlo Power Mowers, Inc.	10.00%	5.00%	5.00%	2012 - Authorized Price List to be Linked
8	Toro	Wesco Turf, Inc.	23.00%	23.00%	N/A	Toro 2013 - Authorized Price List

GROUP NO. 19; MOWER/TRACTOR, LAWN, RIDING TYPE

LINE NO.	MANUFACTURER / BRAND NAME	ORGANIZATION NAME[1]	BASE EQUIPMENT MSRP DISCOUNT[2] [##.##%]	OEM OPTIONS, ACCESSORIES, & IMPLEMENTS MSRP DISCOUNT[3] [##.##%]	OEM PARTS MSRP DISCOUNT[4] [##.##%]	MSRP LIST[5] [INCLUDE: MSRP LIST NAME, MSRP LIST DATE, & MSRP LIST PAGES / SECTIONS]
1	Cub Cadet	Robinson Outdoors, Inc	20.00%	10.00%	10.00%	2012 - Authorized Price List to be Linked
2	John Deere	John Deere Company - A Division of Deere & Company (C&CE Division)	15.00%	15.00%	N/A	John Deere 2013 - Authorized Price List_L25 (X300's)
3	Kubota	Triple D Equipment, Inc.	14.00%	10.00%	8.50%	Kubota 2013 - Authorized Price List

GROUP NO. 20; MOWER/TRACTOR, LAWN & GARDEN, RIDING TYPE

LINE NO.	MANUFACTURER / BRAND NAME	ORGANIZATION NAME[1]	BASE EQUIPMENT MSRP DISCOUNT[2] [##.##%]	OEM OPTIONS, ACCESSORIES, & IMPLEMENTS MSRP DISCOUNT[3] [##.##%]	OEM PARTS MSRP DISCOUNT[4] [##.##%]	MSRP LIST[5] [INCLUDE: MSRP LIST NAME, MSRP LIST DATE, & MSRP LIST PAGES / SECTIONS]
1	Cub Cadet	Robinson Outdoors, Inc	20.00%	10.00%	10.00%	2012 - Authorized Price List to be Linked
2	John Deere	John Deere Company - A Division of Deere & Company (C&CE Division)	18.00%	18.00%	N/A	John Deere 2013 Authorized Price List- 30
3	Kubota	Triple D Equipment, Inc.	12.00%	10.00%	8.50%	Kubota 2013 - Authorized Price List

GROUP NO. 21; MOWER, FRONT (REAR WHEEL STEERING), RIDING TYPE

LINE NO.	MANUFACTURER / BRAND NAME	ORGANIZATION NAME[1]	BASE EQUIPMENT MSRP DISCOUNT[2] [##.##%]	OEM OPTIONS, ACCESSORIES, & IMPLEMENTS MSRP DISCOUNT[3] [##.##%]	OEM PARTS MSRP DISCOUNT[4] [##.##%]	MSRP LIST[5] [INCLUDE: MSRP LIST NAME, MSRP LIST DATE, & MSRP LIST PAGES / SECTIONS]
1	Ferris	Sarlo Power Mowers, Inc.	10.00%	5.00%	5.00%	2012 - Authorized Price List to be Linked
2	Gravely	Ariens Company - Gravely	22.00%	22.00%	10.00%	Discontinued
3	John Deere	John Deere Company - A Division of Deere & Company (C&CE Division)	23.00%	23.00%	N/A	John Deere 2013 - Authorized Price List_C15
4	New Holland	CNH America LLC	27.00%	27.00%	0.00%	2012 - Authorized Price List to be Linked
5	Scag	Florida Outdoor Equipment, Inc.	22.00%	15.00%	N/A	Discontinued
6	Snapper Pro	Sarlo Power Mowers, Inc.	10.00%	5.00%	5.00%	2012 - Authorized Price List to be Linked
7	Toro	Wesco Turf, Inc.	21.00%	21.00%	N/A	Toro 2013 _ Authorized Price List

GROUP NO. 22; MOWER, ZERO TURN RADIUS, RIDING TYPE

LINE NO.	MANUFACTURER / BRAND NAME	ORGANIZATION NAME[1]	BASE EQUIPMENT MSRP DISCOUNT[2] [##.##%]	OEM OPTIONS, ACCESSORIES, & IMPLEMENTS MSRP DISCOUNT[3] [##.##%]	OEM PARTS MSRP DISCOUNT[4] [##.##%]	MSRP LIST[5] [INCLUDE: MSRP LIST NAME, MSRP LIST DATE, & MSRP LIST PAGES / SECTIONS]
1	Cub Cadet	Robinson Outdoors, Inc	20.00%	10.00%	10.00%	2012 - Authorized Price List to be Linked
2	Dixie Chopper	Magic Circle Corporation dba Dixie Chopper	20.00%	12.00%	12.00%	Dixie Chopper 2013- Authorized Price List
3	Ferris	Sarlo Power Mowers, Inc.	10.00%	5.00%	5.00%	2012 - Authorized Price List to be Linked
4	Grasshopper	Live Oak Lawn Supply, Inc.	24.00%	10.00%	5.00%	Authorized Price List Link
5	Gravely	Ariens Company - Gravely	22.00%	22.00%	10.00%	Gravely 2013 - Authorized Price List
6	Hustler Turf	Excel Industries Inc. dba Hustler Turf Equipment	22% (ZEON: 28.58% SPORT: 10%)	22.00%	N/A	12/20/11 - All base equipment, accessories, implements MSRP discount 22%. Exception: ZEON base equipment 28.58% MSRP discount. SPORT base equipment 10% MSRP discount. - Authorized Price List
7	John Deere	John Deere Company - A Division of Deere & Company (C&CE Division)	23.00%	23.00%	N/A	John Deere 2013 - Authorized Price List_C13
8	Kubota	Triple D Equipment, Inc.	23.75%	15.00%	8.50%	Kubota 2013 - Authorized Price List
9	New Holland	CNH America LLC	25.00%	25.00%	0.00%	2012 - Authorized Price List to be Linked
10	Scag	Florida Outdoor Equipment, Inc.	22.00%	15.00%	N/A	Scag 2013 - Authorized Price List
11	Snapper Pro	Sarlo Power Mowers, Inc.	10.00%	5.00%	5.00%	2012 - Authorized Price List to be Linked
12	Toro	Wesco Turf, Inc.	31.00%	31.00%	N/A	Toro 2013 _ Authorized Price List

GROUP NO. 23; MOWER, WIDE-AREA, RIDING TYPE

LINE NO.	MANUFACTURER / BRAND NAME	ORGANIZATION NAME[1]	BASE EQUIPMENT MSRP DISCOUNT[2] [##.##%]	OEM OPTIONS, ACCESSORIES, & IMPLEMENTS MSRP DISCOUNT[3] [##.##%]	OEM PARTS MSRP DISCOUNT[4] [##.##%]	MSRP LIST[5] [INCLUDE: MSRP LIST NAME, MSRP LIST DATE, & MSRP LIST PAGES / SECTIONS]
1	John Deere	John Deere Company - A Division of Deere & Company (C&CE Division)	23.00%	23.00%	N/A	John Deere 2013 - Authorized Price List C18

GROUP NO. 24; GOLF & TURF EQUIPMENT, OTHER (NOT INCLUDED IN OTHER GROUPS)

LINE NO.	MANUFACTURER / BRAND NAME	ORGANIZATION NAME[1]	BASE EQUIPMENT MSRP DISCOUNT[2] [##.##%]	OEM OPTIONS, ACCESSORIES, & IMPLEMENTS MSRP DISCOUNT[3] [##.##%]	OEM PARTS MSRP DISCOUNT[4] [##.##%]	MSRP LIST[5] [INCLUDE: MSRP LIST NAME, MSRP LIST DATE, & MSRP LIST PAGES / SECTIONS]
1	Gravely	Ariens Company - Gravely	18.00%	18.00%	10.00%	Discontinued
2	Hustler Turf	Excel Industries Inc. dba Hustler Turf Equipment	22.00%	22.00%	N/A	Hustler 2012 - Authorized Price List
3	Jacobsen Golf & Turf	Golf Ventures	24.00%	5.00%	0.00%	2012 - Authorized Price List to be Linked
4	John Deere	John Deere Company - A Division of Deere & Company (C&CE Division)	22.00%	22.00%	N/A	John Deere 2013 - Authorized Price List G10, G15, G30, G25
5	Smithco	Golf Ventures	17.00%	5.00%	0.00%	2012 - Authorized Price List to be Linked
6	Toro	Wesco Turf, Inc.	15.00%	15.00%	N/A	Toro 2013 - Authorized Price List

KEY:

1 - Organization Name: The Organization Name is the name of the Respondent's organization. Upon Contract Formation, Section 2.17, if awarded, the Organization Name will be the name of the awarded Contractor and a link will be made to the appropriate Ordering Instructions. Once available, click on the specific link for the associated Ordering Instructions.

2 - Base Equipment MSRP Discount [##.##%]: The Base Equipment MSRP Discount is the statewide discount used to obtain the individual Net Equipment Price (per Section 5.6, Ceiling Prices).

3 - OEM Options, Accessories, & Implements MSRP Discount [##.##%]: The OEM Options, Accessories, & Implements MSRP Discount is the statewide discount used to obtain the individual Net OEM Options, Accessories, & Implements Price (per Section 5.6, Ceiling Prices).

4 - OEM Parts MSRP Discount [##.##%]: The OEM Parts MSRP Discount is the statewide discount used to obtain the individual Net OEM Parts Price (per Section 5.6, Ceiling Prices).

5 - MSRP List [Include: MSRP List Name, MSRP List Date, & MSRP List Pages / Sections]: The MSRP List is the list of Department approved Commodities and associated MSRPs available under the Contract, if awarded. Upon Contract Formation, Section 2.17, if awarded, the MSRP List will be the that of the awarded Contractor and a link will be made to the appropriate MSRP List. Once available, click on the specific link for the associated MSRP List.

NOTE: SECTION 7.1, PRICE SHEET & ORDERING INSTRUCTIONS, IS NOT COMPLETE UNLESS IT IS USED IN CONJUNCTION WITH THE FULL REQUIREMENTS, SPECIFICATIONS, TERMS, AND CONDITONS.

AGENDA MEMO

TO: Mayor & City Commission **AGENDA DATE:** 10/21/2013

FROM: William D. Denny, Acting City Manager **AGENDA ITEM:** 7 - C

SUBJECT: Request for approval to award Bid # PW 13-18, Magdalena Water Treatment Plant Odor Control System.

LOCATION: Magdalena Ave.

BACKGROUND: Due to the close proximity of the Water Treatment Plant to the adjacent residences, Deltona Water has chosen to proceed with an odor control unit to alleviate potential hydrogen sulfide odors. This unit will minimize, if not eradicate, any odors that may be omitted. The odor control improvements will consist primarily of a filtering installation for the air flow from the aeration equipment. The project is in the 2013/2014 CIP budget and will be completed in the FY2013/2014 budget year.

Public Works solicited bids for the Magdalena Water Treatment Plant Odor Control System Project. The bid was solicited on Demandstar and was sent to 672 vendors. There were 37 planholders for this bid with the following 4 responsive bids being received:

1. Waterline Industries Corp.: $137,677.00
2. McMahan Construction: $143,000.00
3. Sawcross: $147,700.00
4. WES Industries: $166,400.00

The low bidder, Waterline Industries Corp., has the required license for this project which was verified through the Department of Business and Professional Regulation.

ORIGINATING DEPARTMENT: Public Works/Deltona Water

SOURCE OF FUNDS: Water / Sewer Utility Fund

COST:	$137,677.00
REVIEWED BY:	Public Works Director, Acting City Manager
STAFF RECOMMENDATION PRESENTED BY:	Gerald Chancellor, Public Works Director - Recommendation is being made to approve award of Bid #PW-13-18 for the Magdalena Water Treatment Plant Odor Control System Project to Waterline Industries Corp.
POTENTIAL MOTION:	"I move to award Bid #PW-13-18 for the Magdalena Water Treatment Plant Odor Control System Project to Waterline Industries Corp. at a total cost of $137,677.00."
AGENDA ITEM APPROVED BY:	_____ William D. Denny, Acting City Manager
ATTACHMENTS:	• Map of Location • Bid Tabulation • Overview of Solicitation and Findings • Contract pre-approved by Legal • Waterline Indsutries Bid Submittal

To see all the details that are visible on the screen, use the "Print" link next to the map.

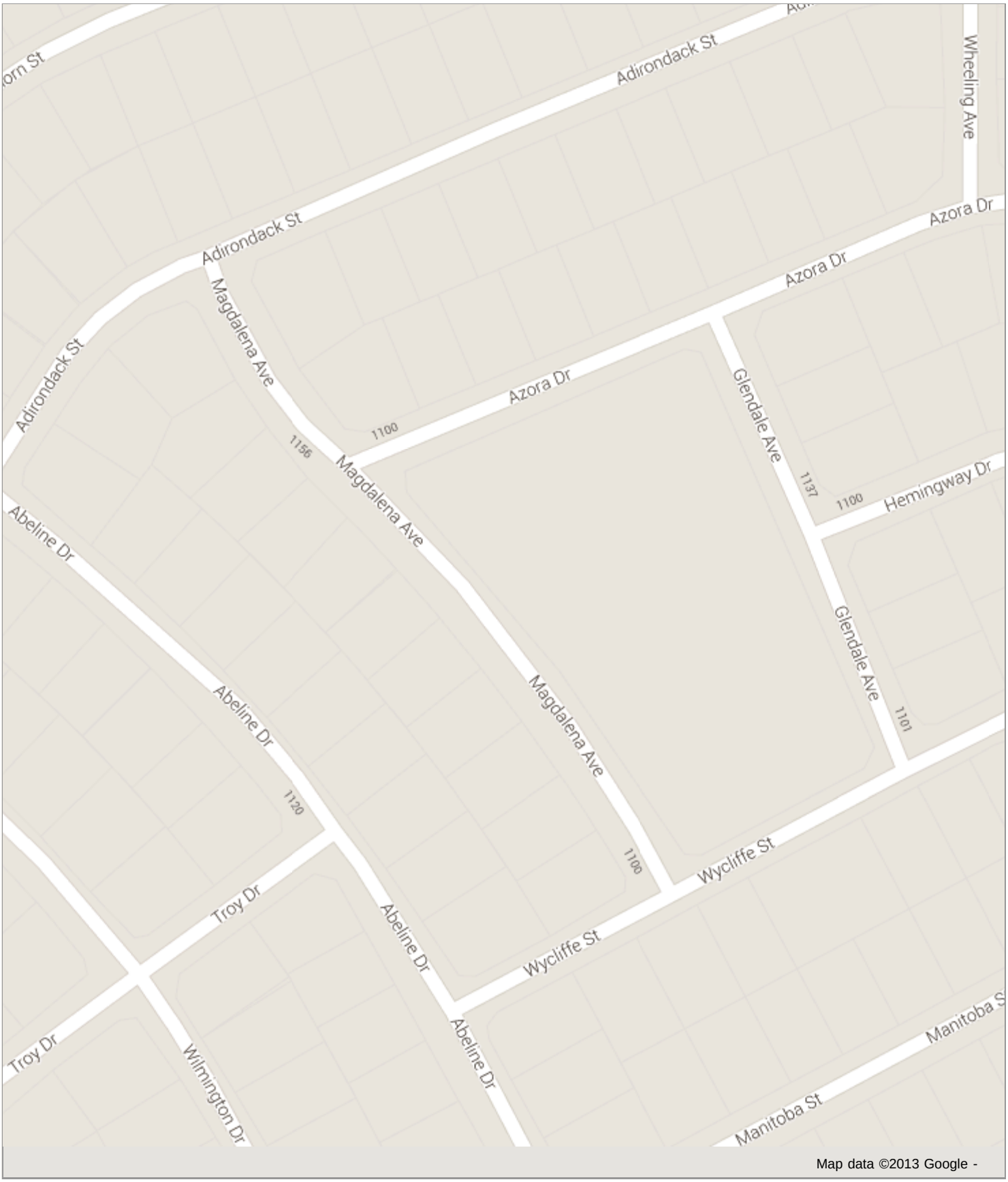

BID TABULATION
BID # PW 13-18 MAGDALENA WTP ODOR CONTROL SYSTEM

ITEM	SCHEDULE OF BID PRICES - DESCRIPTION	MCMAHAN CONSTRUCTION	SAWCROSS	WATERLINE INDUSTRIES	WES INDUSTRIES
1	NEW PACKAGED ODOR CONTROL SYSTEM	$ 138,000.00	$ 142,700.00	$ 132,677.00	$ 161,400.00
2	PERMIT FEE AND ALLOWANCES	$ 5,000.00	$ 5,000.00	$ 5,000.00	$ 5,000.00
	TOTAL BID AMOUNT:	**$ 143,000.00**	**$ 147,700.00**	**$ 137,677.00**	**$ 166,400.00**

Procurement Overview of Solicitation and Findings And Recommendation of Award

ITB # PW 13-18
MAGDALENA WTP ODOR CONTROL SYSTEM

Solicited: August 15, 2013
Pre-Bid meetings held: September 3, 2013
Addendums issued: 1 total
Bid due date: September 17, 2013

A bid solicitation was completed for the Magdalena WTP Odor Control System. It was solicited on the website www.demandstar.com.

Number of vendors and suppliers the solicitation was sent to: 602 Vendors
Number of planholders that downloaded the solicitation: 37 Vendors
Number of Contractors that submitted bids: 4 Contractors

The following Contractors submitted bid responses at the following prices:

Vendor	Total Base Bid
• McMahan Construction, Inc.	$ 143,000.00
• Sawcross, Inc.	$ 147,700.00
• Waterline Industries Corp.	$ 137,677.00
• WES Industries, Inc.	$166,400.00

After review of the bids submitted, it was noted that Waterline Industries Corp. was the lowest responsive bidder at $137,677.00.

A background check on the Florida Department of State Division of Corporations website was conducted to verify their current ability to perform work in Florida as a business, a background check as to any debarment issues, as well as verification of their current license from the Florida DBPR website.

Their submittal had all the appropriate documentation as required within the bid documents and are considered responsive and responsible.

References have been conducted with the City of Palm Coast. They have been recognized as having the experience needed to perform the work required. They have performed multiple jobs within the Water / Wastewater environment over the past 20 years.

Based on the policy and procedures of the City of Deltona and the selection process in which we are to follow. Recommendation of award is going to be made by City of Deltona Staff to award this bid to Waterline Industries Corp. This is based on their low bid, responsiveness in their bid, the past experiences with this type of work and the ability to perform the work as required in the bidding documents.

Purchasing Approval — Date: 9-24-13

Department Approval — Date: 9/24/13

Florida Department of Business & Professional Regulation

DBPR ONLINE SERVICES

Log On

Home

12:41:02 PM 9/19/2013

- Search for a Licensee
- Apply for a License
- View Application Status
- Find Exam Information
- File a Complaint
- AB&T Delinquent Invoice & Activity List Search

Licensee Details

Licensee Information

Name:	DUMKE, RALPH WILLIAM (Primary Name) WATERLINE INDUSTRIES CORP. (DBA Name)
Main Address:	7 LONDON LANE SEABROOK New Hampshire 03874
County:	OUT OF STATE
License Mailing:	
LicenseLocation:	

License Information

License Type:	Certified Building Contractor
Rank:	Cert Building
License Number:	CBC060347
Status:	Current,Active
Licensure Date:	09/21/2001
Expires:	08/31/2014

Special Qualifications	Qualification Effective
Construction Business	08/28/2012

View Related License Information

View License Complaint

1940 North Monroe Street, Tallahassee FL 32399 :: Email: Customer Contact Center :: Customer Contact Center: 850.487.1395

The State of Florida is an AA/EEO employer. Copyright 2007-2010 State of Florida. Privacy Statement

Under Florida law, email addresses are public records. If you do not want your email address released in response to a public-records request, do not send electronic mail to this entity. Instead, contact the office by phone or by traditional mail. If you have any questions, please contact 850.487.1395. *Pursuant to Section 455.275(1), Florida Statutes, effective October 1, 2012, licensees licensed under Chapter 455, F.S. must provide the Department with an email address if they have one. The emails provided may be used for official communication with the licensee. However email addresses are public record. If you do not wish to supply a personal address, please provide the Department with an email address which can

be made available to the public. Please see our **Chapter 455** page to determine if you are affected by this change.

FLORIDA DEPARTMENT OF STATE
DIVISION OF CORPORATIONS
www.sunbiz.org

Detail by Entity Name

Foreign Profit Corporation

WATERLINE INDUSTRIES CORP.

Filing Information

Document Number	F01000004597
FEI/EIN Number	020417129
Date Filed	08/28/2001
State	NH
Status	ACTIVE

Principal Address

7 LONDON LANE
SEABROOK, NH 03874

Changed: 01/21/2009

Mailing Address

7 LONDON LANE
SEABROOK, NH 03874

Changed: 01/21/2009

Registered Agent Name & Address

DUMKE, RALPH W, President
162 ISLAND ESTATES PARKWAY
PALM COAST, FL 32137

Name Changed: 04/03/2013

Address Changed: 04/21/2010

Officer/Director Detail

Name & Address

Title PRES

DUMKE, RALPH W
162 ISLAND ESTATES PARKWAY

PALM COAST, NH 32137

Title VP

GIRARD, MICHAEL VP
7 LONDON LANE
SEABROOK, NH 03874

Title SECR

GILMORE-MCLAUGHLIN, ALICIA VP
7 LONDON LANE
SEABROOK, NH 03874

Title TREA

DUMKE, MARIA MTREASUR
162 ISLAND ESTATES PARKWAY
PALM COAST, NH 32137

Title VP

SHEEHAN, BRIAN VP
7 LONDON LANE
SEABROOK, NH 03874

Title VP

HOUSTON, BARRY VP
7 LONDON LANE
SEABROOK, NH 03874

Annual Reports

Report Year	Filed Date
2011	04/18/2011
2012	04/10/2012
2013	04/03/2013

Document Images

04/03/2013 -- ANNUAL REPORT	View image in PDF format
04/10/2012 -- ANNUAL REPORT	View image in PDF format
04/18/2011 -- ANNUAL REPORT	View image in PDF format
04/21/2010 -- ANNUAL REPORT	View image in PDF format
01/21/2009 -- ANNUAL REPORT	View image in PDF format
01/22/2008 -- ANNUAL REPORT	View image in PDF format
06/28/2007 -- ANNUAL REPORT	View image in PDF format
03/14/2006 -- ANNUAL REPORT	View image in PDF format
01/31/2005 -- ANNUAL REPORT	View image in PDF format

07/01/2004 -- ANNUAL REPORT	View image in PDF format
01/16/2003 -- ANNUAL REPORT	View image in PDF format
02/14/2002 -- ANNUAL REPORT	View image in PDF format
08/28/2001 -- Foreign Profit	View image in PDF format

No Events **No Name History**

Return to Search Results

Home | Contact us | Document Searches | E-Filing Services | Forms | Help |

Copyright © and Privacy Policies
State of Florida, Department of State

AGREEMENT BETWEEN CITY OF DELTONA AND WATERLINE INDUSTRIES CORP. PER ITB NO. PW 13-18

THIS AGREEMENT is made and entered into this ____ day of _____, 2013 by and between the CITY OF DELTONA, a municipality of the State of Florida, whose address is 2345 Providence Boulevard, Deltona, Florida 32725, hereinafter called the "City" and WATERLINE INDUSTRIES CORP., duly authorized to conduct business in the State of Florida, whose principal address is 7 London Lane, Seabrook, New Hampshire, hereinafter called the "Contractor".

WHEREAS, the City desires to obtain services related to the Magdalena Water Treatment Plant Odor Control System per ITB No. PW 13-18. The work generally involves all work as described in the ITB documents, specifications, drawings and any addendum issued for this project.

WHEREAS, the City requested and received expressions of interest from several companies to provide these services; and

WHEREAS, Contractor is competent and qualified to furnish said services to the City and desires to provide its services for this project, and

WHEREAS, the Commission of the City of Deltona has approved award of this agreement on {DATE}.

NOW, THEREFORE, IN CONSIDERATION of the mutual terms, understandings, conditions, premises, covenants and payment hereinafter set forth, and intending to be legally bound, the parties hereby agree as follows:

Article 1. Recitals

The foregoing recitals are true and correct and incorporated herein by reference.

Article 2. Scope of Services

2.1 Pursuant to the terms and conditions set forth in this Agreement, City hereby engages Contractor to perform services related to the Magdalena Water Treatment Plant Odor Control System per ITB No. PW 13-18, attached hereto and incorporated herein by reference, and Contractor's Proposal dated September 17, 2013.

2.2 The services, as described in ITB No. PW 13-18, to be rendered by the Contractor, shall commence upon issuance of a Notice to Proceed and be completed within 120 days.

2.3 City and Contractor recognize that time is of the essence of this Agreement and that City will suffer financial loss if the Work is not completed within the times specified above. They also recognize the delays, expense and difficulties in proving the actual loss suffered by City if the Work is not completed on time. Accordingly, instead of requiring any such proof, City and Contractor agree that as liquidated damages for delay (but not as a penalty), Contractor shall pay the City one thousand dollars ($1,000.00) for each day that goes beyond the agreed upon completion date as stated on the Notice to Proceed. This amount represents an estimate of City's damages for loss of use and administrative costs associated with the delay.

2.4 The services to be rendered by the Contractor shall include all labor, materials, equipment and incidentals necessary to perform all work indicated and specified in the ITB documents.

2.5 Contractor has familiarized itself with the nature and extent of the contract documents, work, site, locality, and all local conditions and laws and regulations that in any manner may affect cost, progress, performance or furnishing of the work.

2.6 Contractor has obtained and carefully studied (or assumes responsibility for obtaining and carefully studying) all examinations, investigations, explorations, tests, reports and studies which pertain to the subsurface or physical conditions at or contiguous to the site or otherwise may affect the cost, progress, performance or furnishing of the work as Contractor considers necessary for the performance or furnishing of the work at the contract price, within the contract time and in accordance with the other terms and conditions of the contract documents and no additional examinations, investigations, explorations, tests, reports, studies or similar information or data are or will be required by Contractor for such purposes.

2.7 Contractor acknowledges that nothing herein shall be deemed to preclude the City from retaining the services of other persons or entities undertaking the same or similar services as those undertaken by the Contractor or from independently developing or acquiring materials or programs that are similar to or competitive with, the services provided under this Agreement.

2.8 Contractor shall be responsible for obtaining all required federal, state or local permits required to complete the scope of work under this agreement.

2.9 Contractor shall be responsible for the quality of work performed. Contractor shall, without additional compensation, correct or revise any errors or deficiencies in his services.

2.10 Contractor agrees to provide a one year maintenance period to correct any defective work that may be found within the one year period from the time of completion.

Article 3. Payment

3.1 The City agrees to compensate Contractor for work performed, completed and accepted by the City's representative for services provided for this project at a total cost not to exceed One hundred thirty seven thousand, six hundred seventy seven dollars and 00/100 ($137,677.00). Fees for any additional work needed will be agreed upon in writing prior to any service being completed.

3.2 Invoices shall be submitted in duplicate to the City of Deltona, Accounts Payable, 2345 Providence Blvd., Deltona, FL 32725. Each invoice shall contain the purchase order number and a detailed description of services and fees.

3.3 The City shall make payment on all invoices in accordance with the Florida Prompt Payment Act, sections 218.70 through 218.79, Florida Statutes.

3.4 The City shall make progress payments on account of the Contract Price on the basis of Contractor's monthly Applications for Payment, as recommended by the City, which shall be submitted by the Contractor between the first (1st) and the tenth (10th) day after the end of each calendar month for which payment is requested. All progress payments will be made on the basis of the progress of the work completed and accepted by the City.

3.5 Progress payments will be made in an amount equal to the percentage indicated below, but in each case, less the aggregate of payments previously made.

3.5.1. Ninety percent (90%) of the value of work completed, with the balance being retainage.

3.5.2. Upon 50% Completion, a total of ninety-five percent (95%) of the value of work completed, with the balance being retainage.

3.5.2. Final Payment. Upon final completion of the work, City shall pay Contractor an amount sufficient to increase total payments to ninety-five percent (95%) of the Contract Price. However, not less than five percent (5%) of the Contract Price shall be retained until Contract Closeout is completed.

3.6 The Contractor shall not be entitled to payment for any other expenses, fees, or other costs it may incur at any time and in any connection with its performance hereunder. The Contractor hereby agrees that the total cost is inclusive of all overhead and administrative expenses.

3.7 In the event a specific project is to be funded by state or federal monies, the Contractor hereby agrees to comply with all requirements of the state or federal government applicable to the use of the monies, including receiving no payment until all required forms are completed, submitted, and approved by the City.

Article 4. Special Terms and Conditions

4.1 Qualifications. Firms or individuals shall be registered with the State of Florida and have obtained at least the minimum thresholds of education and professional experience required by Florida Statutes to perform the services contained herein.

4.2 Termination. This Agreement may be terminated by the City upon thirty (30) days advance written notice to the Contractor; but if any work is in progress but not completed as of the date of termination, then this Agreement may be extended upon written approval of the City until said work is completed by the Contractor and accepted by the City.

A. Upon notification to the Contractor of termination by the City, Contractor will immediately discontinue all services affected unless the notice directs otherwise.

B. Termination for Convenience. In the event this Agreement is terminated or cancelled upon the request and for the convenience of City, City shall reimburse Contractor for actual work satisfactorily completed.

C. Termination for Cause. If the termination of this Agreement is due to the failure of the Contractor to fulfill his contractual obligations, City shall reimburse Contractor for actual work satisfactorily completed, and City may take over the work and prosecute the same to completion by Agreement or otherwise.

D. In the event of termination of this Agreement, all work, reports, and other work product produced by Contractor in connection with the Agreement shall be returned to the City and become and remain the property of the City.

4.3 Assignment. This Agreement may not be assigned or transferred in any manner by Contractor and any such assignment is expressly prohibited. Any attempt to assign this Agreement shall render this Agreement null and void.

4.4 Insurance and Bond. Contractor shall provide and maintain, during the entire term of this Agreement, without cost to the City, insurance in the following types and limits with a company or companies authorized to do business in the State of Florida and rated “Class A” or better by

A. M. Best or some other form of assurance approved by the City's Risk Manager. Contractor shall not commence work under the Agreement until City has received an acceptable certificate or certificates of insurance and endorsement evidencing the required insurance, which is as follows:

(A) General Liability insurance on forms no more restrictive than the latest edition of the Commercial General Liability policy (CG 00 01 or CG 00 02) of the Insurance Services Office or equivalent without restrictive endorsements, with the following minimum limits and coverage available limits fully available during the entire contract period:

General Liability	
Each Occurrence/General Aggregate	$1,000,000
Products-Completed Operations	$1,000,000
Premises Operation	$1,000,000
Personal & Adv. Injury	$1,000,000
Professional Liability	$1,000,000
Blanket Contractual Liability	$1,000,000
Fire Damage	$50,000
Medical Expense	$5,000

(B) Automobile liability insurance, including owned, non-owned and hired autos with the following minimum limits and coverage:

Combined Single Limit	$1,000,000
Or	
Bodily Injury (per person)	$1,000,000
Bodily Injury (per accident)	$1,000,000
Property Damage	$100,000

(C) Workers' compensation insurance in accordance with Florida Statute, Chapter 440, and/or any other applicable law requiring workers' compensation (Federal, maritime, etc).

(D) <u>Additional Requirements:</u>

(1) **City of Deltona shall be <u>named and endorsed</u> as an additional insured on the General liability policy.**

(2) The General Liability policy is to contain or be endorsed to name the City, its officers, officials and employees as additional insureds as respects to the liability arising out of the activities performed under this Agreement. Such coverage shall be primary to

the extent of Contractors negligent acts or omissions or willful misconduct, and shall apply separately to each insured against whom claim is made or suit is brought, except with respect to the limits of the insurer's liability. In addition, a waiver of subrogation by the commercial liability insurer shall be provided that lists or names the additional insured as subject to the waiver. Coverage shall be on an "occurrence" basis and not "claims made".

(3) Certificates of insurance shall provide for a minimum of thirty (30) days prior written notice to the City of any material change or cancellation of the required insurance, with ten (10) day written notice of cancellation due to non-payment of premium.

(4) Certificates of insurance shall identify the Bid number, contract, project, etc. in the Description of Operations section of the Certificate.

(5) Contractor shall be responsible for subcontractors and their insurance.

(6) The Certificate holder section of each policy shall state: City OF DELTONA, 2345 PROVIDENCE BOULEVARD, DELTONA, FLORIDA 32725.

(7) Contractor shall be solely responsible for all deductibles and self-insurance retention on Contractor Liability Insurance policies. All of the policies of insurance so required to be purchased and maintained shall contain a provision or endorsement that the coverage afforded shall not be canceled, materially changed or renewal refused without thirty (30) calendar days written notice, or without ten (10) days written notice of cancellation due to non-payment of premium, being given to City by certified mail.

(E) A payment and performance bond for 100% of the contract price will be required from the Contractor for this project.

4.5 Indemnity. Contractor shall indemnify, defend and hold harmless City, its officers and employees, from liabilities, damages, losses and costs, including, but not limited to, reasonable attorney's fees, to the extent caused by the negligence, recklessness or intentional wrongful misconduct of Contractor and persons employed or utilized by Contractor in the performance of this Contract. This indemnification shall survive the term of this Contract. In addition, any act alleged to give rise to an action in inverse condemnation shall be subject to the same indemnification.

4.6 Independent Contractor. Contractor agrees that it shall be acting as an independent contractor and shall not be considered or deemed to be an agent, employee, joint venturer, or partner of City. Contractor shall have no authority to contract for or bind City in any manner and

shall not represent itself as an agent of City or as otherwise authorized to act for or on behalf of City.

4.7 Ownership of Deliverables.

(a) Title to all work product produced by Contractor pursuant to this Agreement shall be and remain the sole and exclusive property of City when produced. Contractor shall deliver all such original work product to City upon completion thereof unless it is necessary for Contractor, in City's sole discretion to retain possession for a longer period of time.

(b) The documents, reports, and similar materials provided or created by Contractor are public records and Contractor shall abide by applicable requirements of Florida law. Contractor shall notify the City within 24 hours of receiving the request to release the information concerning the subject project to a member of the media and/or to the public. The City's notification shall to the extent possible provide the name, date, time and type of information requested to be released prior to the Contractor's release or disclosure of information to the media or to the public.

4.8 Return of Materials. Upon the request of the City, but in any event upon termination of this Agreement, Contractor shall surrender to the City all memoranda, notes, records, and other documents or materials pertaining to the services hereunder, that were furnished to the Contractor by the City pursuant to this Agreement. Contractor may keep copies of all work products for its records.

4.9 NO CLAIM FOR DAMAGES OR ANY CLAIM OTHER THAN FOR AN EXTENSION OF TIME SHALL BE MADE OR ASSERTED AGAINST THE CITY BY REASON OF ANY DELAYS. No interruption, interference, inefficiency, suspension or delay in the commencement or progress of the work from any cause whatsoever, shall relieve the Contractor of his duty to perform or give rise to any right to damages or additional compensation from the City. The Contractor expressly acknowledges and agrees that the Contractor shall receive no damages for delay. The Contractor's sole remedy, if any, against the City shall be the right to seek an extension to the contract time.

4.10 Retaining Other Contractors by City. Nothing herein shall be deemed to preclude the City from retaining the services of other persons or entities undertaking the same or similar services as those undertaken by the Contractor or from independently developing or acquiring materials or programs that are similar to or competitive with, the services provided under this Agreement.

4.11 Accuracy. The Contractor is responsible for the professional quality, technical accuracy, timely completion and coordination of all the services furnished hereunder. The Contractor

shall, without additional compensation, correct or revise any errors, omissions or other deficiencies in its services.

4.12 Codes and Regulations. All work completed under this Agreement shall at all times comply with all applicable federal, state and local statutes, codes, regulations and ordinances.

4.13 Public Entity Crimes. A person or affiliate who has been placed on the convicted vendor list following a conviction of a public entity crime may not be awarded or perform work as a contractor, supplier, subcontractor, or engineer under a contract with any public entity in excess of the threshold amount provided in Florida Statutes, section 287.017 for Category Two for a period of thirty-six (36) months from the date of being placed on the convicted vendor list.

4.14 Prohibition against Contingent Fees. Contractor warrants that they have not employed or retained any company or person, other than a bona fide employee working solely for the Contractor to solicit or secure this Agreement and that they have not paid or agreed to pay any person, company, corporation, individual, or firm, other than a bona fide employee working solely for the Contractor, any fee, commission, percentage, gift or other consideration contingent upon or resulting from the award or making of this Agreement.

Article 5. General Conditions

5.1 This Agreement is made under, and in all respects shall be interpreted, construed, enforced, and governed by and in accordance with, the laws of the State of Florida. Venue for any legal action resulting from this Agreement shall lie solely in Volusia County, Florida.

5.2 No modification, amendment or alteration in the terms or conditions contained herein shall be effective unless contained in a written document executed with the same formality and of equal dignity herewith. The City may make changes in the services at any time by giving written notice to Contractor. If such changes increase (additional services) or decrease (eliminate any amount of work) in the scope of work, City and Contractor shall modify this agreement through issuance of a change order. All change orders shall be authorized in writing by City prior to commencing or reducing any term of this agreement.

5.3 Neither the City's review, approval or acceptance of, nor payment for, any of the services required shall be construed to operate as a waiver of any rights under this Agreement or of any cause of action arising out of the performance of this Agreement and the Contractor shall be and remain liable to the City in accordance with applicable law for all damages to the City caused by the Contractor's performance of any of the services furnished under this Agreement.

5.4 In the event Contractor, during the course of the work under this Agreement, requires the services of any Sub-Contractor or other professional associates in connection with service

covered by this Agreement, Contractor must secure the prior written approval of the City. If Sub-Contractors or other professional associates are required in connection with the services covered by this Agreement, Contractor shall remain fully and solely responsible for the services of and monies owed to Sub-Contractors or other professional associates.

5.5 It is recognized that questions in the day-to-day conduct of performance pursuant to this Agreement will arise. The City, upon request by Contractor, shall designate in writing and shall advise Contractor in writing of one (1) or more City employees to whom all communications pertaining to the day-to-day conduct of the Agreement shall be addressed. The designated representative shall have the authority to transmit instructions, receive information and interpret and define the City's policy and decisions pertinent to the work covered by this Agreement.

5.6 No claim for services furnished by the Contractor not specifically provided for herein shall hold the City liable or be honored by the City.

5.7 The Contractor agrees that it will not engage in any action that would create a conflict of interest in the performance of its obligations pursuant to this Agreement with the City or which would violate or cause others to violate the provisions of Part III, Chapter 112, Florida Statutes, relating to ethics in government.

5.8 The Contractor hereby certifies that no officer, agent or employee of the City has any material interest (as defined in Section 112.312(15), Florida Statutes, as over 5%) either directly or indirectly, in the business of the Contractor to be conducted here, and that no such person shall have any such interest at any time during the term of this Agreement.

5.9 The captions utilized in this Agreement are for the purposes of identification only and do not control or affect the meaning or construction of any of the provisions hereof.

5.10 This Agreement shall be binding upon and shall inure to the benefit of each of the parties and of their respective successors and permitted assigns. Nothing in this Agreement is intended or shall be deemed to confer any rights or benefits upon any entity or person other than the parties hereto or to make or render any such other entity or person a third-party beneficiary of this Agreement.

5.11 This Agreement may not be amended, released, discharged, rescinded or abandoned, except by a written instrument duly executed by each of the parties hereto.

5.12 The failure of any party hereto at any time to enforce any of the provisions of this Agreement will in no way constitute or be construed as a waiver of such provision or of any other provision hereof, nor in any way affect the validity of, or the right thereafter to enforce, each and every provision of this Agreement.

5.13 During the term of this Agreement Contractor assures City that it is in compliance with Title VII of the 1964 Civil Rights Act, as amended, and the Florida Civil Rights Act of 1992, in that Contractor does not on the grounds of race, color, national origin, religion, sex, age, disability or marital status, discriminated in any form or manner against Contractor employees or applicants for employment. Contractor understands and agrees that this Agreement is conditioned upon the veracity of this statement of assurance.

5.14 Public Records. The Contractor shall allow public access to all documents, papers, letters, or other material subject to the provisions of Chapter 119, Florida Statutes, and made or received by the Contractor in conjunction with this Agreement. Specifically, the Contractor shall:

(a) Keep and maintain public records that ordinarily and necessarily would be required by the City in order to perform the service.

(b) Provide the public with access to public records on the same terms and conditions that the City would provide the records and at a cost that does not exceed the cost provided in state law or as otherwise provided by law.

(c) Ensure that public records that are exempt or confidential and exempt from public records disclosure requirements are not disclosed except as authorized by law.

(d) Meet all requirements for retaining public records and transfer, at no cost, to the City all public records in possession of the Contractor upon termination of the Agreement and destroy and duplicate public records that are exempt or confidential and exempt from the public records disclosure requirements. All records stored electronically must be provided to the City in a format that is compatible with the information technology system of the City.

Article 6. Severability and Notice

6.1 The invalidity or unenforceability of any particular provision of this Agreement shall not affect the other provisions hereof, and this Agreement shall be construed in all respects as if such invalid or unenforceable provisions were omitted.

6.2 Wherever provision is made in this Agreement for the giving, service or delivery of any notice, statement or other instrument, such notice shall be in writing and shall be deemed to have been duly given, served and delivered, if delivered by hand or mailed by United States registered or certified mail or sent by facsimile, addressed as follows:

If to Contractor:	If to City:
Ralph Dumke	Gerald Chancellor, P.E.
President	Public Works Director
Waterline Industries Corp.	City of Deltona
267 Old Moody Blvd	2345 Providence Blvd.
Palm Coast, Florida 32164	Deltona, Florida 32725

Each party hereto may change its mailing address by giving to the other party hereto, by hand delivery, United States registered or certified mail notice of election to change such address.

Article 7. Scope of Agreement

7.1 This Agreement is intended by the parties hereto to be the final expression of their Agreement, and it constitutes the full and entire understanding between the parties with respect to the subject hereof, notwithstanding any representations, statements, or agreements to the contrary heretofore made.

7.2 This Agreement consists of the following:

This Agreement
Notice of Award and Notice to Proceed
ITB Documents, to include Project Manual and Drawings
Addendum, if any
Contractor's Response to ITB

(REMAINDER OF PAGE INTENTIONALLY LEFT BLANK)

IN WITNESS WHEREOF, the parties hereto have made and executed this Agreement for the purposes stated herein.

ATTEST:

_____
Secretary

(CORPORATE SEAL)

CONTRACTOR:

_____
President

_____
Date

ATTEST:

_____
JOYCE RAFTERY
City Clerk

CITY OF DELTONA

_____
WILLIAM "DAVE" DENNY
Acting City Manager

_____
Date

Approved as to Form and Legality:

_____
GRETCHEN R.H. VOSE
City Attorney

SECTION 00300

BID FORM

Proposal of Waterline Industries Corp., hereinafter called "Bidder", a Corporation doing business as Waterline Industries Corp. to the City of Deltona, Florida hereafter called "Owner". The Bidder, in compliance with the Owner's invitation for bids for the construction of:

City of Deltona
ITB # PW 13-18
Magdalena Water Treatment Plant Odor Control System

having examined the plans and specifications with related documents and the site of the proposed work, and being familiar with all of the conditions surrounding the construction of the proposed project including the availability of materials and labor, hereby proposes to furnish all labor, materials, and supplies; and to construct the project in accordance with the Contract Documents, within the time set forth herein, and at the prices stated below. These prices are to cover all expenses incurred in performing the work required under the Contract Documents, of which this proposal is a part.

Bidder accepts all of the terms and conditions of the Advertisement for Bids and General Conditions, Instructions, and Information for Bidders.

Bidder hereby agrees to commence work under contract on or before a date to be specified in a written "Notice to Proceed" of the Owner and to substantially complete the Project within ninety (90) consecutive calendar days and to fully complete the Project within one hundred twenty (120) consecutive calendar days thereafter as stipulated in the specifications. Bidder further agrees to pay any liquidated damages, as specified in the Agreement, for each consecutive calendar day thereafter.

Bidder has examined and carefully studied the Bidding Documents and the following addendum receipt of which is hereby acknowledged:

No. One (1)	Dated: 9/10/2013	No.	Dated:
No.	Dated:	No.	Dated:
No.	Dated:	No.	Dated:
No.	Dated:	No.	Dated:

BASE PROPOSAL: Bidder agrees to perform all of the work described in the specifications and shown on the plans for the sum shown in the schedule below:

SCHEDULE OF BID PRICES

Item No.	Description	Estimated Quantity	Units	Unit Price	Extended Price
1	New Packaged Odor Control System	1	LS	$ _____	$ _____
2	Permit Fee and Allowances	1	LS	$5,000.00	$5,000.00

Total Bid Amount: $_____

Total in Words: _____

The unit prices provided above shall include all labor, materials, bailing, shoring, removal, overhead, profit, insurance, etc., to cover the finished work of the several kinds required. Any changes to the Work after issuance of the Notice of Award shall be processed in accordance with Articles 10, 11, and 12 of the General Conditions (Section 00700) and Article 5 of the Agreement with the Owner.

Bidder understands that the Owner reserves the right to reject any or all bids and to waive any informalities in the bidding.

A bid security, attached in the sum of five (5) percent of the Total Bid Amount, is to become the property of the Owner in the event contract and bond are not executed within thirty (30) days of the Owner issuing a Notice of Award, as liquidated damages for the delay and additional expense to the Owner caused thereby.

SCHEDULE OF MAJOR MANUFACTURERS AND SUPPLIERS

The equipment manufacturers/suppliers on this project shall be as delineated in the following schedule. Bidders should note that the Owner and Engineer have made rigorous investigations of equipment performance and features, and as a result, Bidders are to note that the contract price for this project shall be based on Base Bid equipment. The Base Bid equipment for this project falls under one of two categories. The first category is equipment that the Owner and Engineer have determined will be supplied by a sole source of supply, for which no substitutions or alternates will be entertained or allowed. Bidder is advised that offering of any alternatives to the sole source supplied equipment will be grounds for rejection of his bid as not responsive. The second category of equipment includes those items where the Owner and Engineer deem there to be more than one acceptable supplier of the particular item listed. The equipment which falls under these two categories is a shown on the subsequent pages of this Schedule of Major Manufacturers and Suppliers. Bidder is advised that the award of this Contract will be based solely on the use of Base Bid equipment.

The following comments relate only to the second category of equipment, where the Contract Documents are based upon the equipment or products available from the suppliers denoted as A, B, C, etc. below. These equipment manufacturers, along with the sole source suppliers constitute the Base Bid.

Provision is made in the Contract Documents for alternate manufacturers and suppliers whose equipment or product may be deemed equivalent in quality (see General Conditions). However, the Bidder must indicate in his Bid which Base Bid supplier he intends to use for each item of equipment listed by circling one of the listed manufacturers/suppliers. If the Bidder fails to indicate which listed manufacturer/supplier he intends to use if an alternate is rejected, he must use the supplier listed as "A". Also, if the Bidder circles more than one listed supplier, he must use the first supplier circled (unless an alternate is approved).

If the Bidder desires to propose one or more alternate manufacturers/suppliers, he may write in the name of such alternates in the spaces provided on the Alternate Manufactures/Suppliers page following the schedule. He must, nevertheless, also circle one of the listed manufacturers/suppliers because Bidders' Bid price must be based upon this Base Bid list. Wherever an alternate supplier is proposed, the Bidder must insert the amount to be deducted from the Contract Price (either lump sum or unit price) if the alternate supplier is eventually approved. If the proposed alternate supplier is determined "not equivalent" by the Engineer, the Bidder must use the circled supplier.

For any alternate supplier accepted by the Owner, the Contract Price will be reduced by the deductive amount stated in the Bid. However, the Contract Price will not be adjusted for any alternate supplier rejected.

Each proposed alternate will be evaluated in accordance with the General Conditions. The deductive amount specified for alternate manufacturers/suppliers will not be used in determining the successful Bidder. Alternates will be considered only after award of the contract. The Contractor shall reimburse the Owner for any costs directly attributable to the change in suppliers, such as additional field trips for the Engineer, additional redesign costs, additional review and inspection costs, etc.

The Owner may request and the Bidder shall supply complete information on proposed alternates prior to the Notice of Award.

SCHEDULE OF MAJOR MANUFACTURERS AND SUPPLIERS

Category I - Sole Source Equipment Items:

NONE

Category II - Major Equipment Items:

Item No.	Spec. No.	Equipment/Material	Manufacturer or Supplier
1	11256	Packaged Odor Control System	A) Siemens

ALTERNATE MANUFACTURERS/SUPPLIERS

EQUIPMENT ITEM MATERIAL	SPEC. SECTION	ALTERNATIVE MANUFACTURER / SUPPLIER (LIST ONE ONLY)	DEDUCTIBLE AMOUNT (indicate whether lump sum or unit price) ALTERNATE
1. Packaged Odor Control System	11256	PurAirfiltration, LLC	
2.			
3.			
4.			
5.			
6.			
7.			
8.			
9.			
10.			

9/17/2013

Name (signature) Date

Ralph W. Dumke

Name (typed and printed)

President

Title

00300-5

SECTION 00030
BIDDER'S CONTACT AND INFORMATION FORM

Bidder (Company) Name: Waterline Industries Corp.	**F. E. I. N. or SS Number:** 02-0417129
Mailing Address: 267 Old Moody Blvd	**Street Address:** 267 Old Moody Blvd
City, State, Zip: Palm Coast, FL 32164	**City, State, Zip:** Palm Coast, FL 32164
Type of Entity: *(Circle one)* (Corporation) Partnership Proprietorship Joint Venture	***I hereby certify that this bid is made without prior understanding, agreement, or connection with any corporation, firm, or person submitting a bid for the same materials, supplies or equipment, and is in all respects fair and without collusion or fraud. I agree to abide by all conditions of this bid and certify that I am authorized to sign this bid for the Bidder.*** X _____ Authorized Signature (Manual)
Incorporated in the State of: New Hampshire **Year:** 1987	**Typed or Printed Name:** Ralph W. Dumke, President
Telephone Number: (386) 227-6747	**Title:** President
Fax Number: (603) 474-8578	
Email contact info: jwinter@waterlineind.com	

SECTION 00480
NON COLLUSION AFFIDAVIT FORM

STATE OF FLORIDA

COUNTY OF VOLUSIA

Ralph W. Dumke, being first duly sworn deposes and says that:

1. He/She is the President, of Waterline Industries Corp., the Bidder that has submitted the attached Bid;

2. He/She is fully informed respecting the preparation and contents of the attached Bid and of all pertinent circumstances respecting such Bid;

3. Such Bid is genuine and is not a collusive or sham Bid;

4. Neither the said Bidder nor any of its officers, partners, owners, agents, representatives, employees, or parties in interest, including this affidavit, have in any way, colluded, conspired, connived or agreed, directly or indirectly, with any other Bidder, firm or person to submit a collusive or sham Bid in connection with the Contract for which the attached Bid has been submitted; or to refrain from bidding in connection with such Contract; or have in any manner, directly or indirectly, sought by agreement or collusion,, or communication, or conference with any Bidder, firm, or person to fix the price or prices in the attached Bid or of any other Bidder, or to fix any overhead, profit, or cost elements of the Bid price or the Bid price of any other Bidder, or to secure through any collusion, conspiracy, connivance, or unlawful agreement any advantage against (Recipient), or any person interested in the proposed Contract;

5. The price or prices quoted in the attached Bid are fair and proper and are not tainted by any collusion, conspiracy, connivance, or unlawful agreement on the part of the Bidder or any other of its agents, representatives, owners, employees or parties in interest, including this affidavit.

By _____
Ralph W. Dumke, President

Sworn and subscribed to before me this 17th day of September, 20 13, in the State of Florida, County of Flagler.

_____ Notary Public

My Commission expires:

FAYE LOURAS
Notary Public - State of Florida
My Comm. Expires Jul 18, 2015
Commission # EE 113453

00480-1

SECTION 00340
PROPOSER'S CERTIFICATION FORM

I have carefully examined the Request for Proposal, Instructions to Proposers, General and/or Special Conditions, Vendor's Notes, Specifications, proposed agreement and any other documents accompanying or made a part of this Request for Proposal.

I hereby propose to furnish the goods or services specified in the Request for Proposal at the prices and rates quoted in my Proposal. I agree that my Proposal will remain firm for a period of up to one hundred twenty (120) days in order to allow the City adequate time to evaluate the Proposal.

I agree to abide by all conditions of the Proposal and understand that a background investigation may be conducted by the City of Deltona prior to award.

I certify that all information contained in this Proposal is truthful to the best of my knowledge and belief. I further certify that I am a duly authorized to submit this Proposal on behalf of the vendor / contractor as its act and deed and that the vendor / contractor is ready, willing and able to perform if awarded the contract.

I further certify, under oath, that this Proposal is made without prior understanding, agreement, connection, discussion, or collusion with any other person, firm or corporation submitting a Proposal for the same product or service; no officer, employee or agent of the City of Deltona Government or of any other Proposer interested in said Proposal; and that the undersigned executed this Proposer's Certification with full knowledge and understanding of the matters therein contained and was duly authorized to do so.

Name of Business Waterline Industries Corp.

By: _____
Signature

Ralph W. Dumke, President
Name & Title, Typed or Printed

267 Old Moody Blvd
Mailing Address

Palm Coast, FL 32164
City, State, Zip Code

(386) 227-6747
Telephone Number

Sworn to and subscribed before me

This 17th day of

September, 20 13

_____
Signature of Notary

Notary Public, State of Florida

Personally known ✓
-OR-
Produced Identification _____

FAYE LOURAS
Notary Public - State of Florida
My Comm. Expires Jul 18, 2015
Commission # EE 113453

SECTION 00470
SWORN STATEMENT UNDER SECTION 287.133(3)(A), FLORIDA STATUTES, ON PUBLIC ENTITY CRIMES

THIS FORM MUST BE SIGNED IN THE PRESENCE OF A NOTARY PUBLIC OR OTHER OFFICER AUTHORIZED TO ADMINISTER OATHS.

This sworn statement is submitted to the City of Deltona by Ralph W. Dumke, President
(Individual's name and title)

For Waterline Industries Corp.
(Name of entity submitting sworn statement)

Whose business address is 267 Old Moody Blvd, Palm Coast, FL 32164

And (if applicable) its Federal Employer Identification Number (FEIN) is 02-0417129
(if the entity has no FEIN, include the Social Security Number of the individual signing this sworn statement)

1. I understand that a "public entity crime" as defined in Section 287.133(1)(g), Florida Statutes, means a violation of any State or Federal law by a person with respect to and directly related to the transaction of business with any public entity or with an agency or political subdivision of any other state or with the United States, including, but not limited to, any bid or contract for goods or services to be provided to any public entity or an agency or political subdivision of any other state or a of the United States and involving antitrust, fraud, theft, bribery, collusion, racketeering, conspiracy, or material misrepresentation.

2. I understand that "convicted" or "conviction" as defined in Paragraph 287.133(1)(b), Florida Statutes, means a finding of guilt or a conviction of a public entity crimes, with or without an adjudication of guilt, in any Federal or State trial court of record relating to charges brought by indictment or information after July 1, 1989, as a result of a jury verdict, non-jury trial, or entry of a plea of guilty or nolo contendere.

3. I understand that an "affiliate' as defined in Section 287.133(1)(a), Florida Statutes, means:

   A predecessor or successor of a person convicted of a public entity crime: or an entity under the control of any natural person who is active in the management of the entity and how has been convicted of a public entity crime. The term "affiliate" includes those officers, directors, executives, partners, shareholders, employees, members, and agents who are active in the management of an affiliate. The ownership by one (1) person of shares constituting a controlling interest in another person, or a pooling of equipment or income among persons when not for fair market value under an arm's length agreement, shall be a prima facie case that one person controls another person. A person who knowingly enters into a joint venture with a person who has been convicted of a public entity crime in Florida during the preceding thirty-six (36) months shall be considered an affiliate.

4. I understand that a "person" as defined in Section 287.133(1)(e), Florida Statutes, means any natural person or entity organized under the laws of any state or of the United States with the legal power to enter into a binding contract and which bids or applies to bid on contracts for the provision of goods or services let by a public entity, or which otherwise transacts or applies to transact business with a public entity. The term "person" includes those officers, directors, executives, partners, shareholders employees, members, and agents who are active in management of an entity.

5. Based on information and belief, the statement which I have marked below is true in relation to the entity submitting this sworn statement. (You must indicate which statement applies.)

(SECTION 00470 Continued)

_X____ Neither the entity submitting this sworn statement, nor any officers, directors, executives, partners, shareholders, employees, members, or agent who is active in management of the entity, nor the affiliate of the entity has been charged with and convicted of a public entity crime subsequent to July 1, 1989.

_____ The entity submitting this sworn statement, or one or more of the officers, directors, executives, partners, shareholders, employees, members or agent who are active in management of the entity, or an affiliate of the entity, has been charged with and convicted of a public entity crime subsequent to July 1, 1989.

_____ The entity submitting this sworn statement, or one or more of the officers, directors, executives, partners, shareholders, employees, members or agents who are active in management of the entity, or an affiliate of the entity, has been charged with and convicted of a public entity crime subsequent to July 1, 1989. However, there has been a subsequent proceeding before an Administrative Law Jury of the State of Florida, Division of Administrative Hearings and the Final Order entered by the Administrative Law Jury determined that it was not in the public interest to place the entity submitting this sworn statement on the convicted vendor list. (You must attach a copy of the final order).

I UNDERSTAND THAT THE SUBMISSION OF THIS FORM TO THE CITY OF DELTONA IS FOR THE CITY ONLY AND, THAT THIS FORM IS VALID THROUGH DECEMBER 31, OF THE CALENDAR YEAR IN WHICH IT IS FILED. I ALSO UNDERSTAND THAT I AM REQUIRED TO INFORM THE CITY PRIOR TO ENTERING IN TO A CONTRACT IN EXCESS OF THE THRESHOLD AMOUNT PROVIDED IN SECTION 287.017, FLORIDA STATUTES, FOR CATEGORY TWO OF ANY CHANGE IN THE INFORMATION CONTAINED IN THIS FORM.

SIGNATURE Ralph W. Dumke, President

9/17/2013
DATE

State of Florida
County of Flagler

Personally appeared before me, the undersigned authority, Ralph W. Dumke (name of individual signing) who, after first being sworn by me, affixed his/her signature in the space provided above on the 17th day of September, 2013.

NOTARY PUBLIC

My commission expires:

FAYE LOURAS
Notary Public - State of Florida
My Comm. Expires Jul 18, 2015
Commission # EE 113453

00470-2

SECTION 00620
CORPORATE RESOLUTION FORM

I, Alicia McLaughlin, Secretary of Waterline Industries Corp., a corporation organized and existing under the laws of the State of New Hampshire, hereby certify that at a meeting of the Board of Directors of the Corporation duly called and held on August 23, 20 13 at which a quorum was present and acting throughout, the following resolutions were adopted and are now in full force effect:

RESOLVED that the following individuals of this corporation are authorized to execute on behalf of this corporation A Bid and Agreement to the City of Deltona for the construction of Magdalena Water Treatment Plant Odor Control System

I further certify that the names of the officers of this corporation and any other persons authorized to act under this resolution and their official signatures are as follows:

NAME	OFFICE	OFFICIAL SIGNATURE
Ralph W. Dumke	President	
ALICIA McLAUGHLIN	SECRETARY	Alicia McLaughlin

IN WITNESS THEREOF, I have hereunto subscribed my name as Secretary and affixed the seal of the corporation this 17th day of September, 20 13

00620-1

SECTION 00482
HOLD HARMLESS AND INDEMNITY AGREEMENT

Waterline Industries Corp. agrees through the signing of this document by an authorized party or agent that it shall defend, indemnify and hold harmless the City of Deltona, and its agents, employees, and public officials from and against all suits, losses, claims, demands, judgments of every name and description arising out of or incidental to the performance of this contract or work performed there under, whether or not due to or caused by the negligence of the City of Deltona, its agents, employees, and public officials excluding only the sole negligence of the City of Deltona, its agents, employees, and Public Officials.

This provision shall also pertain to any claims brought against the City of Deltona, its agents, employees, and public officials by an employee of the named Contractor, any Sub-contractor, or anyone directly or indirectly employed by any of them.

The Contractor's obligation to indemnify the City of Deltona, its agents, employees and public officials under this provision shall be limited to $1,000,000 per occurrence which the parties agree bears a reasonable commercial relationship to the contract.

The Contractor agrees to accept, and acknowledges as adequate remunerations, the consideration of $10, which is part of the agreed bid price, the promises contained herein, and other good and valuable consideration, the receipt of which is hereby acknowledged, for agreement to enter into this Hold Harmless and Indemnity Agreement.

CONTRACTOR Ralph W. Dumke, President

9/17/2013
DATE

SECTION 00325
REFERENCES FORM

References which are located in foreign countries are not acceptable.
References listing a Prime Contractor as the Owner are not acceptable.

1. **Project Name:** Electric Shutoff Valves for Tanks & Hibiscus Water Booster Pump Station
   Project Value: $77,318
   Project Description: Furnish & Install Electric Valves at Water Booster Pump Station
   Project Owner: City of Melbourne, Florida
   Owner contact information: John Frazier - Frazier Engineering (321) 253-8131
   Project Location: Melbourne, Florida
   Project Start and End Dates: March 2005 - May 2005

2. **Project Name:** Wastewater Treatment Plant Improvements
   Project Value: $943,543
   Project Description: Improvements to WWTP, including Concrete, Metals, Site work, mechanical & electrical work.
   Project Owner: City of Cape Canaveral
   Owner contact information: Walter Bandish - DPW Director (321) 868-1240
   Project Location: Cape Canaveral, Florida
   Project Start and End Dates: April 2004 - November 2004

3. **Project Name:** Chlorine Contact Basin & Flume Cover
   Project Value: $47,677
   Project Description: Misc. Metals improvements at chlorine contact basin & flume cover.
   Project Owner: City of New Smyrna Beach Utilities Commission
   Owner contact information: James White - Director of Engineering (386) 427-1361
   Project Location: New Smyrna Beach, Florida
   Project Start and End Dates: March 2011 - May 2011

4. **Project Name:** Wasterwater System Improvements
   Project Value: $1,687,777
   Project Description: Improvements to the Water Reclamation Facility
   Project Owner: City of Cocoa Beach, Florida
   Owner contact information: Scott Barber - Operations Manager (321) 868-3321
   Project Location: Cocoa Beach, Florida
   Project Start and End Dates: March 2002 - March 2003

REFERENCES FORM
(SECTION 00325 CONTINUED)

5. **Project Name:** Pilot Post RO Treatmen for Water Plant Three
   Project Value:
   Project Description: Reverse Osmosis Treatment at Water Treatment Plant Three.
   Project Owner: City of Palm Coast, Florida
   Owner contact information: Jim Hogan - Utility Systems Manager (386) 986-2374
   Project Location: Palm Coast, Florida
   Project Start and End Dates: 2012

6. **Project Name:** Fountain Well Water Treatment Plant
   Project Value: $3,897,677
   Project Description: Construction of a new water treatment plant, well and water transmission main.
   Project Owner: Town of Raynham, Massachusetts
   Owner contact information: Bill Ward - (508) 824-2707
   Project Location: Raynham, Massachusetts
   Project Start and End Dates: October 2009 - February 2011

7. **Project Name:** Neponset Street Water Treatment Plant
   Project Value: $8,031,760
   Project Description: Construction of a water treatment plant, including electrical & mechanical work.
   Project Owner: Town of Canton, Massachusetts
   Owner contact information: Mike Trotta (781) 821-5017
   Project Location: Canton, Massachusetts
   Project Start and End Dates: May 2010 - May 2012

8. **Project Name:** Provin Mountain Reservoir Rehabilitation
   Project Value: $2,657,477
   Project Description: Concrete tank structure improvements & repair to reservoir 2.
   Project Owner: Springfield Water & Sewer Commission
   Owner contact information: Daniel Downie (413) 787-6256
   Project Location: Springfield, Massachusetts
   Project Start and End Dates: March 2011 - March 2012

SECTION 00330
SUB-CONTRACTORS AND AFFILIATES FORM

The following are a list of Sub Contractors or Affiliates that will be utilized in this project. Use additional sheets if necessary.

1. **Firm Name:** N/A
   Trade: _____
   Firm Owner: _____
   Firm Address: _____
   Firm Phone Number: _____

2. **Firm Name:** _____
   Trade: _____
   Firm Owner: _____
   Firm Address: _____
   Firm Phone Number: _____

3. **Firm Name:** _____
   Trade: _____
   Firm Owner: _____
   Firm Address: _____
   Firm Phone Number: _____

4. **Firm Name:** _____
   Trade: _____
   Firm Owner: _____
   Firm Address: _____
   Firm Phone Number: _____

5. **Firm Name:** _____
   Trade: _____
   Firm Owner: _____
   Firm Address: _____
   Firm Phone Number: _____

SECTION 00485
DRUG-FREE WORKPLACE FORM

The undersigned Bidder in accordance with Florida Statute 287.087, hereby certifies that

Waterline Industries Corp. does:
(*Name of Business*)

1. Publish a statement notifying employees that the unlawful manufacture, distribution, dispensing, possession, or use of a controlled substance is prohibited in the workplace and specifying the actions that will be taken against employees for violations of such prohibition.

2. Inform employees about the dangers of drug abuse in the workplace, the business's policy of maintaining a drug-free workplace, any available drug counseling, rehabilitation, and employee assistance programs, and the penalties that may be imposed upon employees for drug abuse violations.

3. Give each employee engaged in providing the commodities or contractual services that are proposed a copy of the statement specified in subsection (1).

4. In the statement specified in subsection (1), notify the employees that, as a condition of working on the commodities or contractual services that are under bid, the employee will abide by the terms of the statement and will notify the employer of any conviction of, or plea of guilty or nolo contendere to, any violation of Chapter 893 or of any controlled substance law of the United States or any state, for a violation occurring in the workplace no later than five (5) days after such conviction.

5. Impose a sanction on, or require the satisfactory participation in a drug abuse assistance or rehabilitation program if such is available in the employee's community, by any employee who is so convicted.

6. Make a good faith effort to continue to maintain a drug-free workplace through implementation of this section.

As the person authorized to sign the statement, I certify that this firm complies fully with the above requirements.

X _____
Bidder's Signature Ralph W. Dumke, President

9/17/2013
Date

00485-1

SECTION 00320
QUESTIONNAIRE FORM

DATE: 9/17/2013

PROJECT IDENTIFICATION **City of Deltona – Public Works Division**
Magdalena Water Treatment Plant
Odor Control System

NAME OF BIDDER: Waterline Industries Corp.

BUSINESS ADDRESS: 267 Old Moody Blvd, Palm Coast, FL 32164

TELEPHONE NO: (386) 227-6747

CONTRACTOR'S FLORIDA LICENSE NO: CBC060347

The undersigned warrants the truth and accuracy of all statements and answers herein contained. Include additional sheets if necessary.

1. How many years has your organization been in business as a General Contractor? 25+ years

2. List similar projects that you have undertaken in the most recent three year period. Identify the Owner and a Contact person:

	Project	Municipality / Owner	Contact Name/Number
1:	Fountain Well Water Treatment Plant	Town of Raynham, MA	Bill Ward (508) 824-2707
2:	Neponset Street Water Treatment Plant	Town of Canton, MA	Mike Trotta (781) 821-5017
3:	Provin Mountain Reservoir Rehab.	Springfield Water & Sewer Commission	Daniel Downie (413) 787-6256

3. Have you ever failed to complete work awarded to you? If so, where and why?
NO

4. Name three (3) municipalities or government entities for which you have performed similar projects as this one and to which you refer?
Town of Raynham - Fountain Well Water Treatment Plant Bill Ward (508) 824-2707
Town of Canton - Neponset Street Water Treatment Plant Mike Trotta (781) 821-5017
Springfield Water & Sewer Commission - Provin Mountain Reservoir Rehab. Daniel Downie (413) 787-6256

5. Have you personally inspected the site of the proposed Work? Describe any anticipate problems with the site and your proposed solutions.

Yes, we have inspected the site, and no, we do not acticipate any problems with the site.

6. Will you Subcontract any part of this Work? If so, describe which portion(s).

NO

7. What equipment do you own that is available for the Work? (attach documentation if necessary)
N/A

8. What equipment will you purchase for the Work?
N/A

9. What equipment will you rent for the Work?
Man Lift

10. The following is given as a summary of the Financial Statement of the undersigned: (List Assets and Liabilities and use insert sheet if necessary.)

Please see enclosed envelope

11. State the true and exact, correct, and complete name under which you do business.

Bidder is: Waterline Industries Corp.

00320-2

SECTION 00490
TRENCH SAFETY AFFIDAVIT FORM

(FAILURE TO COMPLETE THIS FORM MAY RESULT IN THE BID BEING DECLARED NON-RESPONSIVE)

Waterline Industries Corp. (NAME OF CONTRACTOR) hereby provides written assurance that compliance with applicable Trench Safety Standards identified in the Occupational Safety & Health Administration's Excavation Safety Standards (OSHA) 29 C.F.R.S. 1926.650 Subpart P will be adhered to during trench excavation in accordance with Florida Statutes 553.60 through 533.64 inclusive (1990) "Trench Safety Act".

The specific methods of compliance with applicable Trench Safety Standards, and the associated cost of compliance (costs included in the Bid Price), are as follows (attach additional sheets if necessary):

Item and Safety Measure	Cost
N/A	$
	$
	$
	$
	$
	$
	$
TOTAL	$

By the signature of its undersigned authorized representatives, the Bidder hereby assures the CITY OF DELTONA that any such excavation performed by the Bidder will be performed in compliance with all applicable trench safety standards.

By _____
Ralph W. Dumke, President

Sworn and subscribed to before me this 17th day of September, 2013, in the State of Florida, County of Flagler

_____ Notary Public

My Commission expires:

FAYE LOURAS
Notary Public - State of Florida
My Comm. Expires Jul 18, 2015
Commission # EE 113453

00490-1

STATE OF FLORIDA
DEPARTMENT OF BUSINESS AND PROFESSIONAL REGULATION

CONSTRUCTION INDUSTRY LICENSING BOARD (850) 487-1395
1940 NORTH MONROE STREET
TALLAHASSEE FL 32399-0783

DUMKE, RALPH WILLIAM
WATERLINE INDUSTRIES CORP.
7 LONDON LANE
SEABROOK NH 03874

Congratulations! With this license you become one of the nearly one million Floridians licensed by the Department of Business and Professional Regulation. Our professionals and businesses range from architects to yacht brokers, from boxers to barbeque restaurants, and they keep Florida's economy strong.

Every day we work to improve the way we do business in order to serve you better. For information about our services, please log onto **www.myfloridalicense.com**. There you can find more information about our divisions and the regulations that impact you, subscribe to department newsletters and learn more about the Department's initiatives.

Our mission at the Department is: License Efficiently, Regulate Fairly. We constantly strive to serve you better so that you can serve your customers. Thank you for doing business in Florida, and congratulations on your new license!

STATE OF FLORIDA AC# 6313753
DEPARTMENT OF BUSINESS AND PROFESSIONAL REGULATION
CBC060347 08/28/12 100082188
CERTIFIED BUILDING CONTRACTOR
DUMKE, RALPH WILLIAM
WATERLINE INDUSTRIES CORP.
IS CERTIFIED under the provisions of Ch.489 FS
Expiration date: AUG 31, 2014 L12082804943

DETACH HERE

THIS DOCUMENT HAS A COLORED BACKGROUND • MICROPRINTING • LINEMARK™ PATENTED PAPER

C#6313753

STATE OF FLORIDA
DEPARTMENT OF BUSINESS AND PROFESSIONAL REGULATION
CONSTRUCTION INDUSTRY LICENSING BOARD

SEQ# L12082804943

DATE	BATCH NUMBER	LICENSE NBR
08/28/2012	100082188	CBC060347

The BUILDING CONTRACTOR
Named below IS CERTIFIED
Under the provisions of Chapter 489 FS.
Expiration date: AUG 31, 2014

DUMKE, RALPH WILLIAM
WATERLINE INDUSTRIES CORP.
7 LONDON LANE
SEABROOK NH 03874

RICK SCOTT
GOVERNOR

KEN LAWSON
SECRETARY

DISPLAY AS REQUIRED BY LAW

ORIGINAL

WATERLINE INDUSTRIES CORPORATION AND SUBSIDIARIES

CONSOLIDATED FINANCIAL STATEMENTS

DECEMBER 31, 2012

F&D

WATERLINE INDUSTRIES CORPORATION
AND SUBSIDIARIES

TABLE OF CONTENTS

	Page
Independent Auditor's Report	1
Consolidated Balance Sheet December 31, 2012	3
Consolidated Statement of Income For the year ended December 31, 2012	5
Consolidated Statement of Changes in Equity For the year ended December 31, 2012	6
Consolidated Statement of Cash Flows For the year ended December 31, 2012	7
Notes to Consolidated Financial Statements December 31, 2012	9
Additional Information -	
Consolidated Schedule of Earnings from Contracts For the year ended December 31, 2012	23
Consolidated Schedule of Contracts-in-Progress December 31, 2012	24
Consolidated Schedule of Contracts For the year ended December 31, 2012	25
Consolidating Balance Sheet Schedule December 31, 2012	26
Consolidating Schedule of Income For the year ended December 31, 2012	28
Consolidating Schedule of Cost of Revenues Earned For the year ended December 31, 2012	29
Consolidating Schedule of Selling, General and Administrative Expenses For the year ended December 31, 2012	30

F&D

Feeley & Driscoll, P.C.
Certified Public Accountants / Business Consultants

The Board of Directors and Stockholders
Waterline Industries Corporation and Subsidiaries
Seabrook, New Hampshire

Independent Auditor's Report

We have audited the accompanying consolidated financial statements of Waterline Industries Corporation and Subsidiaries, which comprise of the consolidated balance sheet as of December 31, 2012 and the related consolidated statements of income, changes in equity, and cash flows for the year then ended, and the related notes to the consolidated financial statements.

Management's Responsibility for the Financial Statements

Management is responsible for the preparation and fair presentation of these consolidated financial statements in accordance with accounting principles generally accepted in the United States of America; this includes the design, implementation, and maintenance of internal control relevant to the preparation and fair presentation of consolidated financial statements that are free from material misstatement, whether due to fraud or error.

Auditor's Responsibility

Our responsibility is to express an opinion on these consolidated financial statements based on our audit. We conducted our audit in accordance with the auditing standards generally accepted in the United States of America. Those standards require that we plan and perform the audit to obtain reasonable assurance about whether the consolidated financial statements are free from material misstatement.

An audit involves performing procedures to obtain audit evidence about the amounts and disclosures in the consolidated financial statements. The procedures selected depend on the auditor's judgment, including the assessment of the risks of material misstatement of the consolidated financial statements, whether due to fraud or error. In making those risk assessments, the auditor considers internal control relevant to the entity's preparation and fair presentation of the consolidated financial statements in order to design audit procedures that are appropriate in the circumstances, but not for the purpose of expressing an opinion on the effectiveness of the entity's internal control. Accordingly, we express no such opinion. An audit also includes evaluating the appropriateness of accounting policies used and the reasonableness of significant accounting estimates made by management, as well as evaluating the overall presentation of the consolidated financial statements.

We believe that the audit evidence we have obtained is sufficient and appropriate to provide a basis for our audit opinion.

200 Portland Street • Boston, Massachusetts 02114-1709 • (617) 742-7788
154 Broad Street • Nashua, New Hampshire 03061-3158 • (603) 889-0444
www.fdcpa.com • Fax: (617) 742-0210

Praxity
MEMBER
GLOBAL ALLIANCE OF INDEPENDENT FIRMS

Independent Auditor's Report - Continued

Opinion

In our opinion, the consolidated financial statements referred to above present fairly, in all material respects, the financial position of Waterline Industries Corporation and Subsidiaries as of December 31, 2012, and the results of their operations and their cash flows for the year then ended, in conformity with accounting principles generally accepted in the United States of America.

Report on Consolidating Information and Other Supplementary Information

Our audit was conducted for the purpose of forming an opinion on the consolidated financial statements taken as a whole. The consolidating information as described in the table of contents is presented for purposes of additional analysis of the consolidated financial statements rather than to present the financial position, result of operations, and cash flows of the individual companies and it is not a required part of the consolidated financial statements. The other additional information as described in the table of contents also is presented for purposes of additional analysis and is not a required part of the consolidated financial statements. The consolidating and other supplementary information is the responsibility of management and was derived from and relates directly to the underlying accounting and other records used to prepare the consolidated financial statements. Such information has been subjected to the auditing procedures applied in the audit of the consolidated financial statements and certain additional procedures, including comparing and reconciling such information directly to the underlying accounting and other records used to prepare the consolidated financial statements or to the consolidated financial statements themselves, and other additional procedures in accordance with auditing standards generally accepted in the United States of America. In our opinion the consolidating information and the supplementary information as described in the table of contents is fairly stated in all material respects in relation to the consolidated financial statements as a whole.

April 29, 2013

Feeley & Driscoll, P.C.

F&D

WATERLINE INDUSTRIES CORPORATION
AND SUBSIDIARIES

Consolidated Balance Sheet

December 31, 2012

Assets

Current assets:	
Cash and cash equivalents	$ 1,499,341
Contract receivables	6,846,371
Costs and estimated earnings in excess of billings on uncompleted contracts	126,113
Prepaid expenses and other current assets	476,816
Total current assets	8,948,641
Property and equipment:	
Buildings	2,669,903
Machinery and equipment	2,634,812
Furniture and fixtures	860,235
Land	796,976
Leasehold improvements	558,679
Motor vehicles	471,950
	7,992,555
Less accumulated depreciation	3,369,469
	4,623,086
Other asset -	
Cash surrender value of officers' life insurance	89,671
	89,671
	$ 13,661,398

See accompanying notes to consolidated financial statements.

WATERLINE INDUSTRIES CORPORATION
AND SUBSIDIARIES

Consolidated Balance Sheet - Continued

December 31, 2012

Liabilities and Equity

Current liabilities:	
Note payable, line of credit	$ 1,225,767
Current maturities of long-term debt	519,330
Accounts payable	5,129,537
Billings in excess of costs and estimated earnings on uncompleted contracts	1,202,458
Accrued liabilities	304,172
Accrued loss on uncompleted contract	35,127
Total current liabilities	8,416,391
Long-term liabilities:	
Long-term debt, less current maturities	3,593,022
Due to stockholder	724,000
Total long-term liabilities	4,317,022
Commitments and contingencies	
Equity:	
Waterline Industries Corporation stockholders' equity:	
Common stock, no par value; 4,000,000 authorized; 2,596,500 shares issued and outstanding	83,600
Retained earnings	572,279
Total Waterline Industries Corporation stockholders' equity	655,879
Non-controlling interest	272,106
Total equity	927,985
	$ 13,661,398

See accompanying notes to consolidated financial statements.

4

WATERLINE INDUSTRIES CORPORATION
AND SUBSIDIARIES

Consolidated Statement of Income

For the year ended December 31, 2012

Contract revenues earned	$ 34,640,298
Cost of revenues earned	30,972,343
Gross profit	3,667,955
Selling, general and administrative expenses	3,269,835
Income from operations	398,120
Other income (expense):	
Gain on sale of property and equipment	625,692
Other income	42,503
Interest income	8,894
Interest expense	(359,489)
	317,600
Income before income taxes	715,720
Income tax expense	74,085
Net income	641,635
Less net income attributable to non-controlling interest	216,945
Net income attributable to Waterline Industries Corporation	$ 424,690

See accompanying notes to consolidated financial statements.

WATERLINE INDUSTRIES CORPORATION
AND SUBSIDIARIES

Consolidated Statement of Changes in Equity

For the year ended December 31, 2012

	Waterline Industries Corporation Stockholders' Equity					
	Common Stock		Retained		Non-Controlling	Total
	Shares	Amount	Earnings	Total	Interest	Equity
Balances at December 31, 2011	2,596,500	$ 83,600	$ 147,589	$ 231,189	$ 135,161	$ 366,350
Net income	-	-	424,690	424,690	216,945	641,635
Distributions	-	-	-	-	(80,000)	(80,000)
Balances at December 31, 2012	2,596,500	$ 83,600	$ 572,279	$ 655,879	$ 272,106	$ 927,985

See accompanying notes to consolidated financial statements.

WATERLINE INDUSTRIES CORPORATION
AND SUBSIDIARIES

Consolidated Statement of Cash Flows

For the year ended December 31, 2012

Cash flows from operating activities:	
Net income	$ 641,635
Adjustments to reconcile net income to net cash used in operating activities:	
Depreciation	758,508
Change in cash surrender value of officers' life insurance	231,488
Gain on sale of property and equipment	(625,692)
Increase (decrease) in cash resulting from a change in:	
Contract receivables	(2,282,958)
Costs and estimated earnings in excess of billings on uncompleted contracts	400,142
Prepaid expenses and other current assets	(146,219)
Accounts payable	323,690
Billings in excess of costs and estimated earnings on uncompleted contracts	418,537
Accrued liabilities	(266,289)
Accrued loss on uncompleted projects	35,127
Net cash used in operating activities	(512,031)
Cash flows from investing activities:	
Proceeds from sale of property and equipment	1,454,850
Purchases of property and equipment	(177,166)
Net cash provided by investing activities	1,277,684
Cash flows from financing activities:	
Principal payments on long-term debt	(1,116,711)
Proceeds from line of credit	1,175,855
Distributions paid to members	(80,000)
Net cash used in financing activities	(20,856)

See accompanying notes to consolidated financial statements.

WATERLINE INDUSTRIES CORPORATION
AND SUBSIDIARIES

Consolidated Statement of Cash Flows - Continued

For the year ended December 31, 2012

Net increase in cash and cash equivalents	$ 744,797
Cash and cash equivalents at beginning of year	754,544
Cash and cash equivalents at end of year	$ 1,499,341
Supplemental disclosures of cash flow information:	
Cash paid during the year for:	
Interest	$ 359,489
Taxes	$ 41,349

See accompanying notes to consolidated financial statements.

WATERLINE INDUSTRIES CORPORATION
AND SUBSIDIARIES

Notes to Consolidated Financial Statements

December 31, 2012

Note 1 - Operations

Waterline Industries Corporation (WIC) and Waterline Services, LLC (WSL) operate principally as general contractors in the waste-water construction industry, with contracts primarily with customers in the New England area on credit terms that the Company establishes for each contract. Dumke Dreamsbuilders, LLC (DDB) rents heavy equipment to WIC and WSL. Area Realty Trust (Area) owns an office building and rents it to third parties. Round Four Holdings, LLC (Round Four) purchased land and constructed a building in Seabrook, New Hampshire, and leases the space to WIC, WSL and a third party. Round Seven Holdings, LLC (Round Seven) purchased a building in Swansea, Massachusetts, and leases the building to a third party. The Company follows the practice of filing statutory liens on all construction projects when collection problems are anticipated. The liens serve as collateral for contract receivables.

Note 2 - Significant Accounting Policies

A summary of the significant accounting policies followed by WIC, WSL, DDB, Area, Round Four and Round Seven (the "Company") in the preparation of the accompanying consolidated financial statements is set forth below:

Operating Cycle - The Company's work is performed under fixed price contracts modified by incentive and penalty provisions. These contracts are undertaken by WIC or WSL alone. The duration of each project varies; however, most projects are completed within one (1) year to eighteen (18) months.

Balance Sheet Classification - The Company includes in current assets and liabilities retainage amounts receivable and payable under construction contracts, which may extend beyond one (1) year. A one (1) year time period is used at the basis for classifying all other current assets and liabilities.

Principles of Consolidation - The consolidated financial statements include the accounts of Waterline Industries Corporation (WIC), and its majority controlled subsidiaries. The Company has consolidated the Variable Interest Entities (VIE's), Waterline Services, LLC (WSL), Dumke Dreamsbuilders, LLC (DDB), and Area Realty Trust (Area) since September 30, 2006 and Round Four Holdings, LLC (Round Four) and Round Seven Holdings, LLC (Round Seven) since September 30, 2008. These Variable Interest Entities are not owned by WIC, but are owned by WIC's majority stockholder. Generally Accepted Accounting Principles require that the equity in these VIEs be shown as a separate component of total equity described as non-controlling interest. Income (loss) from the VIEs is required to be reported as part of net income; however, the amounts of net income (loss) related to the VIE's are required to be separately disclosed on the income statement. All significant intercompany transactions have been eliminated.

WATERLINE INDUSTRIES CORPORATION
AND SUBSIDIARIES

Notes to Consolidated Financial Statements - Continued

December 31, 2012

Note 2 - Significant Accounting Policies - Continued

Principles of Consolidation - Continued - Effective for years beginning after November 15, 2009 the Status of VIEs reported in the Company's financial statements is required to be reassessed on a continuous basis. See the separate note on variable interest entities for the detailed disclosures required. In addition the Amended Codification requires that on the face of the balance sheet the Company shall present separately (a) assets of a consolidated variable interest entity that can be used only to settle obligations of the consolidated variable interest entity and (b) liabilities of a consolidated variable interest entity for which creditors (or beneficial interest holders) do not have recourse to the general credit of the primary beneficiary.

Estimates - The preparation of the consolidated financial statements in accordance with accounting principles generally accepted in the United States of America requires management to make estimates and assumptions that affect the reported amounts of assets and liabilities and the disclosure of contingent assets and liabilities at the date of the financial statements. Estimates also affect the reported amounts of revenues and expenses during the reporting period. Actual results could differ from those estimates.

Revenue and Cost Recognition - Construction Contracts - Revenues from fixed-price construction contracts are recognized on the percentage-of-completion method, measured by the percentage of costs incurred to date to estimated total costs for each contract. This method is used because management considers expended costs to be the best available measure of progress on these contracts. Because of inherent uncertainties in estimating costs, it is at least reasonably possible that the estimates used will change within the near-term.

Contract costs include all direct material, labor, subcontractor, taxes, direct bond costs and equipment costs and those indirect costs related to contract performance, such as indirect labor, workmen's compensation, equipment rental, insurance, transportation, supplies, repairs and maintenance, and depreciation costs. Selling, general and administrative costs are charged to expense as incurred. Provisions for estimated losses on uncompleted contracts are made in the period in which such losses are determined. Changes in job performance, job conditions and estimated profitability, including those arising from contract penalty provisions and final contract settlements, may result in revisions to costs and income and are recognized in the period in which the revisions are determined. Profit incentives are included in revenues when their realization is reasonably assured. An amount equal to contract costs attributable to claims is included in revenues when realization is probable and the amount can be reasonably estimated.

The asset, "Costs and estimated earnings in excess of billings on uncompleted contracts," represents revenues recognized in excess of amounts billed. The liability, "Billings in excess of costs and estimated earnings on uncompleted contracts," represents billings in excess of revenues recognized.

WATERLINE INDUSTRIES CORPORATION
AND SUBSIDIARIES

Notes to Consolidated Financial Statements - Continued

December 31, 2012

Note 2 - Significant Accounting Policies - Continued

Contracts Receivable - Contracts receivable are based on contracted prices. The Company provides an allowance for doubtful accounts equal to estimated bad debt losses. The estimated losses are based on historical collection experiences together with a review of the current status of the existing receivables. At December 31, 2012, no allowance for doubtful accounts was deemed necessary. Normal contracts receivable are due thirty (30) days after the issuance of the invoice. Contract retentions are due thirty (30) days after the completion of the project and acceptance by the owner.

Property and Equipment - All property and equipment are stated at cost. Major renewals, additions and betterments are charged to the property accounts while replacements, maintenance and repairs which do not improve or extend the lives of the respective assets are expensed in the year incurred.

Depreciation - Depreciation is computed using primarily the straight-line method over the estimated useful lives of the related assets as follows:

Assets	Life in Years
Buildings	39
Machinery and equipment	5-8
Furniture and fixtures	5-7
Leasehold improvements	15-39
Motor vehicles	5

Impairment of Long-Lived Assets - Long-lived assets to be held and used are tested for recoverability whenever events or changes in circumstances indicate that the related carrying amount may not be recoverable. When required, impairment losses on assets to be held and used are recognized based on the excess of the asset's carrying amount over the fair value of the asset. Certain long-lived assets to be disposed of by sale are reported at the lower of carrying amount or fair value less cost to sell. As of December 31, 2012, there was no impairment losses recognized for long term assets.

Income Taxes - Effective October 1, 2006, the stockholders elected for Waterline Industries Corporation to be treated as a Subchapter S Corporation for income tax purposes as provided in Section 1362(a) of the Internal Revenue Code. The Subsidiaries are Limited Liability Companies (LLC) and, accordingly, are treated as partnerships for federal income tax purposes. As such, the corporate income or loss and credits are passed through to the stockholders and members and combined with their personal income and deductions to determine taxable income on their individual tax returns on the federal level. The state income tax results from income being recognized and taxed at the corporate level under some state tax regulations.

WATERLINE INDUSTRIES CORPORATION
AND SUBSIDIARIES

Notes to Consolidated Financial Statements - Continued

December 31, 2012

Note 2 - Significant Accounting Policies - Continued

Income Taxes - Continued - Provisions for income taxes are based on taxes payable or refundable for the current year and deferred taxes for temporary differences between the amount of taxable income and pretax financial income and between the tax basis of assets and liabilities and their reported amounts in the financial statements. Deferred tax assets and liabilities are included in the financial statements at currently enacted income tax rates applicable to the period in which the deferred tax assets or liabilities are expected to be realized or settled as. As changes in tax laws are enacted, deferred tax assets and liabilities are adjusted through the provision for income taxes. Investment tax credits are applied as a reduction to the current provision for federal income taxes using the flow through method.

The Company recognizes tax benefits only in the event that a position is more likely than not to be sustained upon examination by the applicable taxing authority. There are no current federal or state income tax examinations in progress. Tax years from 2009 through the current year remain open for examination by federal and state tax authorities.

Advertising - Advertising costs are expensed when incurred.

Subsequent Events - Management evaluated events or transactions subsequent to the balance sheet date for potential recognition or disclosure in the financial statements through April 29, 2013, which is the date the financial statements were available for issuance.

Note 3 - Cash and Cash Equivalents

The Company considers its holdings to be cash equivalents if the instruments mature within ninety (90) days from the date of acquisition and have no penalty for early withdrawal.

The Company has a potential concentration of credit risk in that it maintains deposits with financial institutions in excess of amounts insured by the Federal Deposit Insurance Corporation (FDIC). The maximum deposit insurance amount was $250,000 for interest bearing accounts, which was applied per depositor, per insured bank for each account ownership category. Noninterest-bearing accounts were provided unlimited insurance coverage through December 31, 2012. As of December 31, 2012, the Company had $812,077 in excess of FDIC limits. Effective January 1, 2013, noninterest-bearing accounts will no longer be insured separately from depositors' other accounts at the same bank. Instead, noninterest-bearing accounts will be added to any of a depositor's other accounts in the applicable ownership category, and the aggregate balance insured up to the amount of $250,000, per depositor at each bank.

WATERLINE INDUSTRIES CORPORATION
AND SUBSIDIARIES

Notes to Consolidated Financial Statements - Continued

December 31, 2012

Note 4 - Contract Receivables

Contract receivables are as follows as of December 31, 2012:

Contract receivables:	
Billed:	
Completed	$ 528,675
Contracts-in-progress	4,288,748
Retained	1,932,516
	6,749,939
Unbilled	96,432
	$ 6,846,371

Note 5 - Costs and Estimated Earnings on Uncompleted Contracts

Costs incurred on uncompleted contracts	$ 39,313,444
Estimated earnings	2,563,656
	41,877,100
Less billings to date	(42,988,572)
	$ (1,111,472)

Included in the accompanying consolidated balance sheet under the following captions:

Costs and estimated earnings in excess of billings on uncompleted contracts	$ 126,113
Billings in excess of costs and estimated earnings on uncompleted contracts	(1,202,458)
Accrued loss on uncompleted contracts	(35,127)
	$ (1,111,472)

WATERLINE INDUSTRIES CORPORATION
AND SUBSIDIARIES

Notes to Consolidated Financial Statements - Continued

December 31, 2012

Note 6 - Note Payable, Line of Credit

WIC has a revolving line of credit agreement with a bank that is due on demand. The line of credit arrangement has maximum borrowings allowed of $4,000,000 at December 31, 2012. Subsequent to year end, the bank decreased the line by $1,500,000 in the form of a note payable as described in Note 21. The line of credit bears interest at one-half percent (.5%) above The Wall Street Journal Prime Rate and is payable monthly expiring in April 2013. The line of credit is secured by the assets of WIC, WSL, and DDB and the real estate held by Area and Round Four, as well as an unlimited personal guarantee of the majority stockholder. It is subject to certain financial and reporting covenants. At December 31, 2012, the outstanding balance on the line of credit was $1,225,767. During 2012, DDB and WSL terminated their lines of credit and accordingly, have no balances due.

Note 7 - Accounts Payable

Accounts payable as of December 31, 2012 include amounts due to subcontractors of $934,534, which have been retained pending completion and customer final acceptance of jobs.

Note 8 - Long-term Debt

Long-term debt consists of the following at December 31, 2012:

(Area) Mortgage payable to a bank, payable in monthly installments of $4,870, including interest of 6.0% through June 2028. The note is collateralized by the real estate. The note is guaranteed by the majority stockholder, WIC, DDB, and Round Four.	$	583,086
(DDB) Notes payable to various creditors, payable in monthly installments of various amounts, including interest from 0% to 7.63% through January 2015. The notes are collateralized by various equipment and motor vehicles.		239,450
(DDB) Note payable to a bank in monthly installments of $2,046 including interest of 4.50% through March 2015. The notes are guaranteed by the majority stockholder, Area, WIC, and WSL.		50,768
(DDB) Note payable to a bank in monthly installments of $2,782, including interest at 4.23% through September 2016.		115,483

WATERLINE INDUSTRIES CORPORATION
AND SUBSIDIARIES

Notes to Consolidated Financial Statements - Continued

December 31, 2012 and 2011

Note 8 - Long-term Debt - Continued

(DDB) Note payable to a bank in monthly installments of $2,877, including interest at 5.59% through March 2015. The note guaranteed by the majority stockholder, Area, WIC, and WSL.	$	52,051
(WIC) Note payable to a bank in monthly installments of approximately $28,000, including interest at 5% through March 2018. The note guaranteed by the majority stockholder, DDB, Area, WIC, Round Four, and WSL.		1,500,000
(Round Seven) Mortgage payable to a bank, payable in monthly installments of $2,253, including interest of 6.5% through December 2027. The note is collateralized by the real estate and is personally guaranteed by the majority stockholder. It is subject to certain financial and reporting covenants.		257,188
(Round Four) Mortgage payable to a bank, payable in monthly installments of $6,523, including interest of 7.15% through June 2028. The notes are collateralized by the real estate. The note is guaranteed by the majority stockholder, WIC, WSL, and DDB. It is subject to certain financial and reporting covenants.		723,579
(Round Four) Mortgage payable to a small business administration (SBA),payable in monthly installments of $5,519, including interest at 6.10% through August 2028. The note is collateralized by the real estate.		590,747
		4,112,352
Less current portion		519,330
	$	3,593,022

WATERLINE INDUSTRIES CORPORATION
AND SUBSIDIARIES

Notes to Consolidated Financial Statements - Continued

December 31, 2012 and 2011

Note 8 - Long-term Debt - Continued

Aggregate annual maturities of long-term debt are as follows for the years ending December 31, 2012:

2013	$	519,330
2014		534,373
2015		459,015
2016		452,910
2017		444,179
Thereafter		1,702,545
	$	4,112,352

Note 9 - Retirement Plans

Waterline Industries Corporation established a 401(k) profit-sharing plan for all employees eligible under the plan requirements. Under the plan the Company may, at its discretion, make matching contributions and a profit-sharing contribution. On January 1, 2011, the plan was amended to include prevailing wage contributions. The Company makes prevailing wage contributions to eligible members equal to a percentage of prevailing wages that is the hourly contribution rate for the member's employment classification. The retirement plan expense for the year ended December 31, 2012 was $488,835, which is included in employee benefits in costs of revenues earned.

Note 10 - Lease Commitments

Facility lease expense to third parties for the year ended December 31, 2012 was $66,492 and is included in rent expenses on the schedule of selling, general, and administrative expenses. Transportation lease expense to third parties for the year ended December 31, 2012 was $118,388 and is included in lease expenses on the schedule of selling, general, and administrative expenses. Equipment lease expense to third parties for the year ended December 31, 2012 was $84,715 and is included in equipment and equipment rental on the schedule of cost of revenues earned. The company did not have any material lease commitments with unrelated parties at December 31, 2012.

The Company leases office space and equipment from its consolidated subsidiaries. Refer to the separate footnote titled Variable Interest Entities for eliminated lease transactions with these consolidated subsidiaries.

Refer to the separate footnote titled Variable Interest Entities (Note 14) for eliminated lease transactions with these consolidated subsidiaries.

WATERLINE INDUSTRIES CORPORATION
AND SUBSIDIARIES

Notes to Consolidated Financial Statements - Continued

December 31, 2012 and 2011

Note 11 - Rental Income

One of the variable interest entities ("VIEs") of the Company, Area Realty Trust ("Area"), leases office space to outside parties. The lease agreement calls for monthly payments of $9,150 and is for a period of five (5) years ending November 13, 2013. The tenant is responsible for its proportionate share of state and local real estate taxes and is responsible for the repairs, maintenance and insurance costs related to the property.

Total rental income from third parties was $159,257 for the year ended December 31, 2012 and is included in contract revenues earned.

Note 12 - Income Taxes

The provision for taxes on income consists of the following for the year ended December 31, 2012:

Current -	
State	$ 74,085

Waterline Services, LLC, Dumke Dreamsbuilders, LLC, Area Realty Trust, Round Four Holdings, LLC and Round Seven Holdings, LLC are treated as partnerships for federal income tax purposes. Income of these entities is treated as income of the members, who are responsible for payments of federal income taxes.

Effective October 1, 2006, the stockholders of Waterline Industries Corp elected to be treated as a Subchapter S Corporation for income tax purposes as provided in Section 1362(a) of the Internal Revenue Code. As such, the corporate income or loss and credits are passed through to the stockholders and combined with their personal income and deductions to determine taxable income on their individual tax returns on the federal level. The state income tax results from income being recognized and taxed at the corporate level under some state tax regulations. There were no material timing differences at December 31, 2012.

The Company accrues distributions to stockholders and members to cover the federal and state income taxes which must be paid by the stockholders on their personal income tax returns resulting from corporate taxable income included on their individual tax returns. There were no distributions accrued at December 31, 2012.

WATERLINE INDUSTRIES CORPORATION
AND SUBSIDIARIES

Notes to Consolidated Financial Statements - Continued

December 31, 2012

Note 13 - Related Party Transactions

The Company has a balance due to the majority stockholder of $724,000 at December 31, 2012. Interest payments for the year ended December 31, 2012 were $80,760. The entire balance of $724,000 is subordinated to their Surety and the majority stockholder has formally agreed with them not to demand payment in the next twelve (12) months.

Note 14 - Variable Interest Entities

In 2000, the majority stockholder of the Company established a separate legal entity, Waterline Services, LLC (WSL) to operate as a contractor in the waste-water construction industry. Waterline Industries Corporation uses WSL as a subcontractor on various jobs. For the year ended December 31, 2012, WIC incurred subcontractor expenses of $388,726 in hiring WSL as a subcontractor, which was eliminated upon consolidation.

In 2001, the majority stockholder of the Company established a separate legal entity, Dumke Dreamsbuilders, LLC (DDB) to own equipment which is leased to WIC and WSL. WIC and WSL lease various amounts of equipment on a month to month basis. Lease expense for the year ended December 31, 2012 was $791,370, which was eliminated upon consolidation.

In 2008, the majority stockholder of the Company established three separate legal entities, Round Four Holdings LLC (Round Four), Round Seven Holdings, LLC (Round Seven), and Area Realty Trust (Area) to own office and operating facilities used by the Company and third parties. WIC leases its office facility from Round Four under a three (3) year lease with total monthly rent expense of $25,000 through May 2014. Effective June 2012, the agreement was amended to reduce the monthly rent payments to $18,000. WIC's rent expense for the year ended December 31, 2012 was $253,986. WSL leased its office facility from Round Four under a two (2) year lease with total monthly rent expense of $600 which expired during 2012. WSL's rent expense for December 31, 2012 was $5,400. Round Seven leases its property to a third party who was a tenant at will at December 31, 2012. During the year ended December 31, 2012, WIC incurred rental expense of $10,000 for payments to Round Seven.

Total intercompany rent with VIE's that was eliminated upon consolidation was $269,386 in December 31, 2012.

Following generally accepted accounting principles for variable interest entities, WIC is the primary beneficiary of WSL, DDB, Area, Round Four and Round Seven because the company has the power to direct the activities of WSL, DDB, Area, Round Four and Round Seven that most significantly impact WSL, DDB, Area, Round Four and Round Seven's economic performance. Those activities include management oversight, hiring, decision making, and guarantees of the long term debt related to the buildings, facilities, equipment and operations.

WATERLINE INDUSTRIES CORPORATION
AND SUBSIDIARIES

Notes to Consolidated Financial Statements - Continued

December 31, 2012

Note 14 - Variable Interest Entities - Continued

Should additional financial support be needed for WSL, DDB, Area, Round Four and Round Seven in the future, it is expected that WIC will provide that additional financial support due to the ownership and leasing relationships between WIC and the VIE's. The current major source of Round Four and DDB's revenue is the lease payments made by WIC. The current major source of WSL's revenue is subcontractor work provided by WIC. WSL, DDB, Area, Round Four and Round Seven's creditors have recourse to the assets of the Company due to WIC's guarantee of each of the VIE's long term debt. Therefore, the liabilities of these VIE's are not separately stated on the face of the balance sheet.

Selected information of the VIEs balance sheet as of December 31, 2012 is as follows:

	WSL	DDB	Area	Round Four	Round Seven
Cash and cash equivalents	$ 31,417	$ 785,370	$ 54,415	$ 117,058	$ 1,033
Contracts receivable	26,060	-	-	-	-
Loans to parent	-	-	40,000	-	48,500
Building and land	-	-	968,708	1,653,638	364,299
Equipment	-	1,021,920	-	-	-
Other assets	189,275	133,884	842	-	-
Total assets	246,752	1,941,174	1,063,965	1,770,696	413,832
Less eliminated loans to parent	-	-	(40,000)	-	(48,500)
Total assets in consolidated balance sheet	$ 246,752	$ 1,941,174	$ 1,023,965	$ 1,770,696	$ 365,332
Loans from parent	$ 165,942	$ 2,134,700	$ -	$ 100,000	$ -
Accounts payable	7,485	12,336	-	-	-
Notes payable	-	457,752	583,086	1,314,326	257,188
Other liabilities	3,101	49,900	67,100	10,357	1,040
Total liabilities	176,528	2,654,688	650,186	1,424,683	258,228
Less eliminated loans from parent	(165,942)	(2,134,700)	-	(100,000)	-
Total liabilities in consolidated balance sheet	10,586	519,988	650,186	1,324,683	258,228
Equity (deficit)	$ 70,224	$ (713,514)	$ 413,779	$ 346,013	$ 155,604

WATERLINE INDUSTRIES CORPORATION
AND SUBSIDIARIES

Notes to Consolidated Financial Statements - Continued

December 31, 2012

Note 15 - Concentration of Credit Risk

Contract receivables with two (2) customers accounted for forty-two percent (42%) of the Company's accounts receivable at December 31, 2012.

Revenues with one (1) customer accounted for thirty-nine percent (39%) of the Company's revenues for the year ended December 31, 2012.

Note 16 - Backlog

The following schedule shows a reconciliation of backlog representing the amount of revenue the Company expects to realize from work to be performed on uncompleted contracts in progress at December 31, 2012 and for contractual agreements on which work has not yet begun.

Balance at December 31, 2011	$ 33,650,987
New contracts and adjustments, 2012	15,707,597
	49,358,584
Less contract revenues earned, 2012	34,640,298
Balance at December 31, 2012	$ 14,718,286

The Company entered into additional construction contracts with estimated revenues of approximately $9,000,000 between January 1, 2013 and April 29, 2013.

Note 17 - Restricted Stock Award Plan

Waterline Industries Corp. adopted a performance-based restricted stock plan for certain key employees. The Company granted 144,500 shares of common stock for certain key employees during the year ended September 30, 2004. The employees were vested in all the shares on January 1, 2008. Should any employee cease employment from the Company, the Company is required to repurchase all vested shares at their issue price of $0.40 per share. The number of outstanding vested shares and the related repurchase liability at $0.40 per share is as follows:

	Number of Shares			Dollar Amount Repurchase Liability
	Vested	Non-vested	Total	
Balance at December 31, 2012	96,500	-	96,500	$ 38,600

WATERLINE INDUSTRIES CORPORATION
AND SUBSIDIARIES

Notes to Consolidated Financial Statements - Continued

December 31, 2012

Note 18 - Surety Bonds

The Company, as a condition for entering into some of its construction contracts, had outstanding surety bonds as of December 31, 2012. The surety bonds are collateralized by the contract receivables and personally guaranteed by the stockholders of the Company.

Note 19 - Contingencies

From time to time, the Company is involved in routine litigation that arises in the ordinary course of business. There are no pending significant legal proceedings to which the Company is a party for which management believes the ultimate outcome would have a material adverse effect on the Company's financial position.

Note 20 - Change in Fiscal Year

The Company elected to change its fiscal year end from September 30 to December 31. The Company did not issue separate financial statements for the period from October 1, 2011, its last full fiscal year end prior to the change, to December 31, 2011.

Below is a reconciliation of equity for the period October 1, 2011 through December 31, 2011:

Common stock at September 30, 2011	$ 83,600
Waterline Industries Corporation stockholders' equity	3,178,172
Non-controlling interests	177,114
Consolidated equity at September 30, 2011	3,438,886
Net loss, for the period October 1, 2011 through December 31, 2011	
Waterline Industries Corporation	(3,030,583)
Non-controlling interests	(41,953)
Consolidated net loss	(3,072,536)
Consolidated equity at December 31, 2011	$ 366,350

Note 21 - Subsequent Events

The bank reduced the outstanding line of credit at December 31, 2012 by $1,500,000 in the form of a note payable in monthly installments of approximately $28,000 including interest at five percent (5%) through March 2018, as seen in Note 8.

ADDITIONAL INFORMATION

WATERLINE INDUSTRIES CORPORATION
AND SUBSIDIARIES

Consolidated Schedule of Earnings from Contracts

For the year ended December 31, 2012

	Revenues Earned	Cost of Revenues Earned	Gross Profit
Contracts completed during the year	$ 3,526,715	$ 3,208,717	$ 317,998
Contracts in progress at year end	30,337,369	27,873,972	2,463,397
Small jobs and over applied costs	120,827	(263,134)	383,961
Third party rental activity	655,387	152,788	502,599
	$ 34,640,298	$ 30,972,343	$ 3,667,955

WATERLINE INDUSTRIES CORPORATION AND SUBSIDIARIES

Consolidated Schedule of Contracts-in-Progress

December 31, 2012

Contracts	Type	Total Contract Price	Total Estimated Costs	Estimated Gross Profit (Loss)	Estimated Gross Profit (Loss) %	Costs to December 31, 2012	Accrued Loss on Uncompleted Contracts	Costs of Revenues December 31, 2012	Percent Complete	Billings to December 31, 2012	Costs and Estimated Earnings in Excess of Billings	Billings in Excess of Costs and Estimated Earnings	Gross Profit (Loss) Recognized as of December 31, 2012	Estimated Future Gross Profit
I1101	A	$ 17,928,199	$ 16,345,510	$ 1,582,689	8.83%	$ 13,718,160	$ -	$ 13,718,160	83.93%	$ 15,388,864	$ -	$ 342,414	$ 1,328,290	$ 254,399
404	A	6,839,985	7,257,389	(417,404)	-6.10%	6,646,638	35,127	6,681,765	91.58%	6,188,682	75,679	-	(417,404)	-
403	A	4,283,119	4,062,126	221,003	5.16%	3,772,416	-	3,772,416	92.87%	4,064,075	-	86,418	205,241	15,762
I1207	A	4,267,677	3,832,232	435,445	10.20%	160,383	-	160,383	4.19%	240,764	-	62,157	18,224	417,221
I0408	A	3,521,757	3,175,151	346,606	9.84%	2,588,983	-	2,588,983	81.54%	3,098,180	-	226,578	282,619	63,987
405	A	3,079,442	3,066,263	13,179	0.43%	2,772,649	-	2,772,649	90.42%	2,844,660	-	60,094	11,917	1,262
385	A	2,635,740	2,609,703	26,037	0.99%	2,607,968	-	2,607,968	99.93%	2,635,740	-	1,752	26,020	17
I1106	A	1,969,146	1,807,472	161,674	8.21%	1,807,244	-	1,807,244	99.99%	1,922,257	46,641	-	161,654	20
I1204	A	1,949,767	1,770,507	179,260	9.19%	70,923	-	70,923	4.01%	131,161	-	53,057	7,181	172,079
I1206	A	1,930,648	1,520,254	410,394	21.26%	825,553	-	825,553	54.30%	1,078,755	-	30,343	222,859	187,535
Other	A	8,225,023	7,218,423	1,006,600	12.24%	4,342,527	-	4,342,527		5,395,434	3,793	339,645	717,055	289,545
		$ 56,630,513	$ 52,665,030	$ 3,965,483	7.00%	$ 39,313,444	$ 35,127	$ 39,348,571		$ 42,988,572	$ 126,113	$ 1,202,458	$ 2,563,656	$ 1,401,827

Contract Type
A - Fixed price

WATERLINE INDUSTRIES CORPORATION
AND SUBSIDIARIES

Consolidated Schedule of Contracts

For the year ended December 31, 2012

Contracts-in-Progress	Type	Cumulative Revenues Earned	Cumulative Cost of Revenues	Cumulative Gross Profit (Loss)	Cumulative Gross Profit (Loss) %	Prior Year Revenues Earned	Prior Year Cost of Revenues	Prior Year Gross Profit (Loss)	Prior Year Gross Profit (Loss) %	Current Year Revenues Earned	Current Year Cost of Revenues	Current Year Gross Profit (Loss)	Current Year Gross Profit (Loss) %
I1101	A	$ 15,046,450	$ 13,718,160	$ 1,328,290	8.83%	$ 1,477,863	$ 1,341,156	$ 136,707	9.25 %	$ 13,568,587	$ 12,377,004	$ 1,191,583	8.78%
404	A	6,264,361	6,681,765	(417,404)	-6.66%	3,367,386	3,619,989	(252,603)	(7.50)%	2,896,975	3,061,776	(164,801)	-5.69%
403	A	3,977,657	3,772,416	205,241	5.16%	2,887,282	2,705,785	181,497	6.29 %	1,090,375	1,066,631	23,744	2.18%
I1207	A	178,607	160,383	18,224	10.20%	-	-	-	-	178,607	160,383	18,224	10.20%
I1408	A	2,871,602	2,588,983	282,619	9.84%	-	-	-	-	2,871,602	2,588,983	282,619	9.84%
405	A	2,784,566	2,772,649	11,917	0.43%	1,116,135	1,128,610	(12,475)	(1.12)%	1,668,431	1,644,039	24,392	1.46%
385	A	2,633,988	2,607,968	26,020	0.99%	2,411,331	2,405,373	5,958	0.25 %	222,657	202,595	20,062	9.01%
I1106	A	1,968,898	1,807,244	161,654	8.21%	-	-	-	-	1,968,898	1,807,244	161,654	8.21%
I1204	A	78,104	70,923	7,181	9.19%	-	-	-	-	78,104	70,923	7,181	9.19%
I1206	A	1,048,412	825,553	222,859	21.26%	-	-	-	-	1,048,412	825,553	222,859	21.26%
Other	A	5,059,582	4,342,527	717,055	14.17%	314,861	273,686	41,175	13.08 %	4,744,721	4,068,841	675,880	14.24%
		41,912,227	39,348,571	2,563,656	6.12%	11,574,858	11,474,599	100,259	0.87 %	30,337,369	27,873,972	2,463,397	8.12%
Completed Contracts													
392	A	12,362,817	11,982,221	380,596	3.08%	11,921,003	11,590,956	330,047	2.77 %	441,814	391,265	50,549	11.44%
396	A	8,031,760	7,872,069	159,691	1.99%	7,719,412	7,563,058	156,354	2.03 %	312,348	309,011	3,337	1.07%
390	A	7,066,757	6,953,908	112,849	1.60%	6,799,081	6,672,438	126,643	1.86 %	267,676	281,470	(13,794)	-5.15%
410	A	2,454,867	2,366,243	88,624	3.61%	1,543,071	1,480,349	62,722	4.06 %	911,796	885,894	25,902	2.84%
400	A	1,304,122	1,240,298	63,824	4.89%	1,252,452	1,194,469	57,983	4.63 %	51,670	45,829	5,841	11.30%
399	A	906,310	789,751	116,559	12.86%	786,371	684,159	102,212	13.00 %	119,939	105,592	14,347	11.96%
Other	A	1,842,230	1,527,042	315,188	17.11%	420,758	337,386	83,372	19.81 %	1,421,472	1,189,656	231,816	16.31%
		33,968,863	32,731,532	1,237,331	3.64%	30,442,148	29,522,815	919,333	3.02 %	3,526,715	3,208,717	317,998	9.02%
		$ 75,881,090	$ 72,080,103	$ 3,800,987	5.01%	$ 42,017,006	$ 40,997,414	$ 1,019,592	2.43 %	$ 33,864,084	$ 31,082,689	$ 2,781,395	8.21%

Contract Type
A - Fixed price

WATERLINE INDUSTRIES CORPORATION AND SUBSIDIARIES

Consolidating Balance Sheet Schedule

December 31, 2012

Assets

	Waterline Industries Corporation	Waterline Services, LLC	Dumke Dreamsbuilders, LLC	Aica Realty Trust	Round Four Holdings, LLC	Round Seven Holdings, LLC	Eliminations	Total
Current assets:								
Cash and cash equivalents	$ 510,048	$ 31,417	$ 785,370	$ 54,415	$ 117,058	$ 1,033	$ -	$ 1,499,341
Contract receivables	6,820,311	26,060	-	-	-	-	-	6,846,371
Costs and estimated earnings in excess of billings on uncompleted contracts	126,113	-	-	-	-	-	-	126,113
Prepaid expenses and other current assets	152,815	189,275	133,884	842	-	-	-	476,816
Due from related party	2,312,142	-	-	40,000	-	48,500	(2,400,642)	-
Total current assets	9,921,429	246,752	919,254	95,257	117,058	49,533	(2,400,642)	8,948,641
Property and equipment:								
Buildings	-	-	-	839,347	1,564,174	266,382	-	2,669,903
Machinery and equipment	519,922	-	2,114,890	-	-	-	-	2,634,812
Furniture and fixtures	701,649	-	158,586	-	-	-	-	860,235
Land	-	-	-	365,000	300,000	131,976	-	796,976
Leasehold improvements	558,679	-	-	-	-	-	-	558,679
Motor vehicles	-	-	471,950	-	-	-	-	471,950
	1,780,250	-	2,745,426	1,204,347	1,864,174	398,358	-	7,992,555
Less accumulated depreciation	1,165,729	-	1,723,506	235,639	210,536	34,059	-	3,369,469
	614,521	-	1,021,920	968,708	1,653,638	364,299	-	4,623,086
Other asset -								
Cash surrender value of officers' life insurance	89,671	-	-	-	-	-	-	89,671
	89,671	-	-	-	-	-	-	89,671
	$ 10,625,621	$ 246,752	$ 1,941,174	$ 1,063,965	$ 1,770,696	$ 413,832	$ (2,400,642)	$ 13,661,398

WATERLINE INDUSTRIES CORPORATION AND SUBSIDIARIES

Consolidating Balance Sheet Schedule - Continued

December 31, 2012

Liabilities and Equity

	Waterline Industries Corporation	Waterline Services, LLC	Dunkle Dreamsbuilders, LLC	Area Realty Trust	Round Four Holdings, LLC	Round Seven Holdings, LLC	Eliminations	Total
Current liabilities:								
Note payable, line of credit	$ 1,225,767	$ -	$ -	$ -	$ -	$ -	$ -	$ 1,225,767
Current maturities of long-term debt	201,853	-	220,159	26,545	60,481	10,292	-	519,330
Accounts payable	5,109,686	7,485	12,336	-	-	30	-	5,129,537
Billings in excess of costs and estimated earnings on uncompleted contracts								
Accrued liabilities	1,202,458	-	-	-	-	-	-	1,202,458
Accrued loss on uncompleted contract	172,704	3,101	49,900	67,100	10,357	1,010	-	304,172
Due to related party	35,127	-	-	-	-	-	-	35,127
Total current liabilities	-	365,942	2,134,700	-	100,000	-	(2,400,642)	-
	7,947,595	176,528	2,417,095	93,645	170,838	11,332	(2,400,642)	8,416,391
Long-term liabilities:								
Long-term debt, less current maturities	1,298,147	-	237,593	556,541	1,253,845	246,896	-	3,593,022
Due to stockholder	724,000	-	-	-	-	-	-	724,000
Total long-term liabilities	2,022,147	-	237,593	556,541	1,253,845	246,896	-	4,317,022
Commitments and contingencies								
Equity:								
Waterline Industries Corporation stockholders' equity:								
Common stock, no par value; 4,000,000 authorized; 2,596,500 shares issued and outstanding	83,600	-	-	-	-	-	-	83,600
Retained earnings	572,279	-	-	-	-	-	-	572,279
Total Waterline Industries Corporation stockholders' equity	655,879	-	-	-	-	-	-	655,879
Non-controlling interest	-	70,224	(713,514)	413,779	346,013	155,604	-	272,106
Total equity	655,879	70,224	(713,514)	413,779	346,013	155,604	-	927,985
Total liabilities and equity	$ 10,625,621	$ 246,752	$ 1,941,174	$ 1,063,965	$ 1,770,696	$ 413,832	$ (2,400,642)	$ 13,661,398

WATERLINE INDUSTRIES CORPORATION
AND SUBSIDIARIES

Consolidating Schedule of Income

For the year ended December 31, 2012

	Waterline Industries Corporation	Waterline Services, LLC	Dumke Dreamsbuilders, LLC	Area Realty Trust	Round Four Holdings, LLC	Round Seven Holdings, LLC	Eliminations	Total
Contract revenues earned	$ 33,984,911	$ 884,856	$ 791,370	$ 141,257	$ 259,386	$ 28,000	$ (1,449,482)	$ 34,640,298
Cost of revenues earned	30,819,555	723,304	601,265	-	8,315	-	(1,180,096)	30,972,343
Gross profit	3,165,356	161,552	190,105	141,257	251,071	28,000	(269,386)	3,667,955
Selling, general and administrative expenses	2,896,206	140,384	414,520	25,869	49,644	12,598	(269,386)	3,269,835
Income (loss) from operations	269,150	21,168	(224,415)	115,388	201,427	15,402	-	398,120
Other income (expense):								
Gain on sale of property and equipment	-	-	625,692	-	-	-	-	625,692
Other income	29,650	12,853	-	-	-	-	-	42,503
Interest income	5,515	-	1,374	27	1,978	-	-	8,894
Management fee	300,000	-	(300,000)	-	-	-	-	-
Interest expense	(180,357)	-	(47,297)	(34,128)	(81,166)	(16,541)	-	(359,489)
	154,808	12,853	279,769	(34,101)	(79,188)	(16,541)	-	317,600
Income (loss) before income taxes	423,958	34,021	55,354	81,287	122,239	(1,139)	-	715,720
Income tax expense	(732)	6,356	50,904	-	17,557	-	-	74,085
Net income	424,690	27,665	4,450	81,287	104,682	(1,139)	-	641,635
Net income (loss) attributable to non-controlling interest	-	27,665	4,450	81,287	104,682	(1,139)	-	216,945
Net income attributable to Waterline Industries Corporation	$ 424,690	$ -	$ -	$ -	$ -	$ -	$ -	$ 424,690

WATERLINE INDUSTRIES CORPORATION
AND SUBSIDIARIES

Consolidating Schedule of Cost of Revenues Earned

For the year ended December 31, 2012

	Waterline Industries Corporation	Waterline Services, LLC	Dunke Dreamsbuilders, LLC	Area Realty Trust	Round Four Holdings, LLC	Round Seven Holdings, LLC	Eliminations	Total
Direct costs:								
Materials	$ 16,006,984	$ 325,466	$ -	$ -	$ -	$ -	$ -	$ 16,332,450
Direct labor	5,831,999	196,661	-	-	-	-	-	6,028,660
Subcontractors	5,886,825	105,895	-	-	-	-	(388,726)	5,603,994
Taxes and other	586,245	9,965	41,960	-	-	-	-	638,170
Direct bonds	216,353	-	-	-	-	-	-	216,353
Equipment and equipment rental	358,578	128	20,079	-	-	-	(294,070)	84,715
Other direct costs	-	59,425	-	-	-	-	-	59,425
	28,886,984	697,540	62,039	-	-	-	(682,796)	28,963,767
Indirect costs:								
Depreciation	187,492	-	502,239	-	-	-	-	689,731
Employee benefits	488,835	-	-	-	-	-	-	488,835
Insurance	237,591	4,008	-	-	8,315	-	-	249,914
Workers' compensation	230,353	1,694	-	-	-	-	-	232,047
Transportation	119,743	10,193	-	-	-	-	-	129,936
Tools and supplies	114,681	1,069	-	-	-	-	-	115,750
Repairs and maintenance	30,510	8,800	34,214	-	-	-	(8,800)	64,724
Rental equipment	488,500	-	-	-	-	-	(488,500)	-
Other	34,866	-	2,773	-	-	-	-	37,639
	1,932,571	25,764	539,226	-	8,315	-	(497,300)	2,008,576
	$ 30,819,555	$ 723,304	$ 601,265	$ -	$ 8,315	$ -	$ (1,180,096)	$ 30,972,343

WATERLINE INDUSTRIES CORPORATION
AND SUBSIDIARIES

Consolidating Schedule of Selling, General and Administrative Expenses

For the year ended December 31, 2012

	Waterline Industries Corporation	Waterline Services, LLC	Dunke Dreamsbuilders, LLC	Area Realty Trust	Round Four Holdings, LLC	Round Seven Holdings, LLC	Eliminations	Total
Salaries and wages	$ 1,198,735	$ 122,712	$ -	$ -	$ -	$ -	$ -	$ 1,321,447
Research and development	452,215	-	251,654	-	-	-	-	703,869
Insurance	196,016	82	8,254	2,355	-	-	-	206,707
Professional fees	138,996	1,700	18,000	-	1,500	1,500	-	161,696
Computer expense	132,990	-	-	-	-	-	-	132,990
Lease expenses	-	-	118,388	-	-	-	-	118,388
Payroll services and taxes	116,114	279	-	-	-	-	-	116,393
Telephone	104,161	-	-	-	-	-	-	104,161
Depreciation	-	332	-	21,522	40,093	6,830	-	68,777
Rent, office	330,478	5,400	-	-	-	-	(269,386)	66,492
Workers' compensation	52,916	6	-	-	-	-	-	52,922
Training, benefits	28,255	2,000	-	-	-	-	-	30,255
Dues and subscriptions	27,894	300	-	-	-	-	-	28,194
Utilities	27,300	-	-	-	172	31	-	27,503
Travel, meals and entertainment	27,308	-	-	-	-	-	-	27,308
Repairs and maintenance	13,847	-	-	1,992	-	-	-	15,839
Postage	13,942	-	-	-	-	-	-	13,942
Office supplies	13,596	-	-	-	-	-	-	13,596
Bank charges	3,824	-	1,132	-	7,776	10	-	12,742
Real estate taxes	-	-	-	-	-	4,125	-	4,125
Contributions	2,935	-	-	-	-	-	-	2,935
Administrative	-	2,463	-	-	-	-	-	2,463
Advertising	627	1,736	-	-	-	-	-	2,363
Bad debt expense	1,053	-	-	-	-	-	-	1,053
Office expenses	-	-	-	-	103	-	-	103
Miscellaneous	13,004	3,374	17,092	-	-	102	-	33,572
	$ 2,896,206	$ 140,384	$ 414,520	$ 25,869	$ 49,644	$ 12,598	$ (269,386)	$ 3,269,835

SECTION 00410
BID BOND FORM

KNOWN ALL MEN BY THESE PRESENTS, that we, the undersigned, Waterline Industries Corp as Principal, and CorePointe Insurance Company as Surety, are hereby held and firmly bound unto the City of Deltona, Florida as Owner in the penal sum of, (five percent 5%) of the Contract Bid _____ for the payment of which, well and truly to be made, we hereby and severally bind ourselves, successors and assigns to pay Owner upon default of Bidder the penal sum set forth on the face of this Bond. Signed, this 17th day of September, 2013.

The condition of the above obligation is such that whereas the Principal has submitted to the City of Deltona, Florida a certain bid, attached hereto and hereby made a part hereof, to enter into a contract in writing, for **Magdalena Water Treatment Plant Odor Control System.**

NOW THEREFORE,

1. Default of Bidder shall occur upon the failure of Bidder to deliver within the time required by the Bidding Documents the executed Agreement required by the Bidding Documents and any performance and payment bonds required by the Bidding Documents and Contract Documents.

2. This obligation shall be null and void if:

   2.1 Owner accepts Bidder's bid and Bidder delivers within the time required by the Bidding Documents (or an extension thereof agreed to in writing by Owner) the executed Agreement required by the Bidding Documents and any performance and payment bonds required by the Bidding Documents and Contract Documents, or

   2.2 All bids are rejected by Owner, or

   2.3 Owner fails to issue a notice of award to Bidder within the time specified in the Bidding Documents (or any extension thereof agreed to in writing by Bidder and, if applicable, consented to by Surety when required by paragraph 5 hereof).

3. Payment under this Bond will be due and Payable upon default of Bidder and within thirty (30) calendar days after receipt of Bidder and surety of written notice of default from Owner which notice will be given with reasonable promptness, identifying this Bond and the Project and including a statement of the amount due.

4. Surety waives notice of any and all defenses based on or arising out of any time extension to issue notice of award agreed to in writing by Owner and Bidder, providing that the time for issuing notice of award including extensions shall not in the aggregate exceed one hundred twenty (120) days from Bid Due without Surety's written consent.

5. No suite or action shall be commenced under this Bond prior to thirty (30) calendar days after the notice of default required in paragraph 3 above is received by Bidder and Surety, and in no case later than one year after Bid Due Date.

6. Any suite or action under this Bond shall be commenced only in a court of competent jurisdiction located in the state in which the Project is located.

7. Notice required hereunder shall be in writing and sent to Bidder and Surety at their respective addresses shown on the face of this Bond. Such notices may be sent by personal delivery, commercial courier or by United States Registered or Certified Mail, return receipt requested, postage pre-paid, and shall be deemed to be effective upon receipt by the part concerned.

8. Surety shall cause to be attached to this Bond a current and effective Power of Attorney evidencing the authority of the officer, agent or representative who executed this Bond on behalf of Surety to execute, seal and deliver such Bond and bind the Surety thereby.

9. This bond is intended to conform to all applicable statutory requirements. Any applicable requirement of any applicable statute that has been omitted from this Bond shall be deemed to be included herein as if set forth at length. If any provision of the Bond conflicts with any applicable provision of any applicable statute, then the provision of said statute shall govern and the remainder of the Bond that is not in conflict therewith shall continue in full force and effect.

10. The term "bid' as used herein includes a bid, offer or proposal as applicable.

IN WITNESS WHEREOF, the Principal and the Surety have hereunto set their hands and seals, and such of them as are corporations have caused their corporate seals to be hereto affixed and these presents to be signed by their proper officers, the day and year first set forth above.

Principal (Print Full Name):

Waterline Industries Corp.

By: _____ (LS)

Title: PRESIDENT

Attest: _____
Signature and Title

Surety (Print Full Name):

CorePointe Insurance Company (Seal)
Surety's Name and Corporate Seal

By: _____
Signature (attach power of attorney) Mark D. Leskanic

Title: Attorney-In-Fact

Attest: _____
Signature and Title Surety Bond Account Manager

September 17th, 2013
(DATE)

IMPORTANT – Surety companies executing bonds must appear on the Treasury Department's most current list (Circular 570 as amended) and be authorized to transact business in the State of Florida.

00410-2

POWER OF ATTORNEY

COREPOINTE INSURANCE COMPANY

KNOW ALL MEN BY THESE PRESENTS, that **COREPOINTE INSURANCE COMPANY** (the "Company"), a corporation duly organized and existing under the laws of the State of Michigan, having its principal office at 401 S. Old Woodward Ave, Suite 300, Birmingham, Michigan, has made, constituted and appointed, and does by these presents make, constitute and appoint:

Newton S Johnson Oscar B Johnson Mark D Leskanic Amanda L Morgan

its true and lawful Attorney-in-Fact, to sign its name as surety as delineated below and to execute, seal, acknowledge and deliver any and all bonds and undertakings, with the exception of Financial Guaranty Insurance, providing that no single obligation shall exceed **Fifteen Million and 00/100 Dollars ($15,000,000.00),** to the same extent as if such bonds had been duly executed and acknowledged by the regularly elected officers of the Company at its principal office in their own proper persons.

This Power of Attorney shall be construed and enforced in accordance with, and governed by, the laws of the State of Michigan, without giving effect to the principles of conflicts of laws thereof. This Power of Attorney is granted pursuant to the following resolutions, which were duly and validly adopted at a meeting of the Board of Directors of the Company held on December 6, 2012:

> RESOLVED, that all bonds, undertakings, powers of attorney, and other instruments for and on behalf of the Company which it is authorized to execute, may be executed in the name and on behalf of the Company by the Chairman of the Board or the President, jointly with the Secretary or an Assistant Secretary, under their respective designations, except that any one or more officers or attorneys-in-fact designated in any resolution of the Board of Directors, or in any power of attorney executed as provided for in these resolutions, may execute any such bond, undertaking, or other instrument as provided in such resolution or power of attorney.

IN WITNESS WHEREOF, the Company has caused these presents to be signed and attested by its appropriate officers and its corporate seal hereunto affixed this *20th* day of *May*, 2013.

CorePointe Insurance Company

(Seal) By _____
James S. Haan
Its President

Attest:
By _____
Thomas J. O'Brien
Its Secretary

STATE OF MICHIGAN)
) **ss:**
COUNTY OF OAKLAND)

Sworn to before me, a Notary Public in the State of Michigan, this *20th* day of *May*, 2013, by James S. Haan and Thomas J. O'Brien who swore to be the President, and the Secretary, respectively, of CorePointe Insurance Company.

_____
Mark Delia
Notary Public, State of Michigan
My Commission Expires February 21, 2015

(Seal)

I, the undersigned, Assistant Secretary of COREPOINTE INSURANCE COMPANY, DO HEREBY CERTIFY that the foregoing is a true, correct and complete copy of the original Power of Attorney; that said Power of Attorney has not been revoked or rescinded and that the authority of the Attorney-in-Fact set forth therein, who executed the bond or undertaking to which this Power of Attorney is attached, is in full force and effect as of this date.

Given under my hand and seal of the Company, this 17th day of September, 2013.

_____
Steven Coward

(Seal)

AGENDA MEMO

TO: Mayor & City Commission **AGENDA DATE:** 10/21/2013

FROM: William D. Denny, Acting City Manager **AGENDA ITEM:** 7 - D

SUBJECT: Request for approval to purchase playground equipment for Manny Rodriguez Park piggybacking the US Communities Contract #110171.

LOCATION:	Manny Rodriguez Park1570 Overton Street, Deltona, FL. 32725
BACKGROUND:	The County installed the playground equipment at Manny Rodriguez Park 20 years ago and the cost to repair it would be more than the cost of a replacement. The scope of this project consists of the construction/installation of a new playground for ages 5 – 12. The City's Risk Manager has requested that the existing playground equipment be removed as it is unsafe and presents a safety hazard. Kompan Inc. was awarded Contract #1101711 through US Communities for Park and Playground equipment. U.S. Communities is a partnership between the Association of School Business Officials, the National Association of Counties, the National Institute of Governmental Purchasing, the National League of Cities and the United States Conference of Mayors and is the leading national government purchasing cooperative.
ORIGINATING DEPARTMENT:	Parks Recreation
SOURCE OF FUNDS:	Park Projects Fund
COST:	$54,493.95
REVIEWED BY:	Finance Director, City Attorney
STAFF RECOMMENDATION PRESENTED BY:	Steve Moore, Parks and Recreation Director - Recommendation is being made to purchase the attached

playground equipment through Kompan Inc. piggybacking US Communities Contract #110171 at a total cost of $54,493.95.

POTENTIAL MOTION:

"I move to approve the purchase of playground equipment through Kompan Inc. piggybacking US Communities Contract #110171 at a total cost of $54,493.95".

AGENDA ITEM APPROVED BY:

_____

William D. Denny, Acting City Manager

ATTACHMENTS:

- Kompan Proposal and Contract Documents

KOMPAN

COROCORD

SALES PROPOSAL

KOMPAN, INC. * 930 Broadway, Tacoma, WA 98402 * Tel 1-888-579-8223 * Fax 1-888-579-8224 * www.kompan.com

KOMPAN is a proud supplier partner of

U.S. COMMUNITIES
GOVERNMENT PURCHASING ALLIANCE

Date	09/24/13
Expiration Date	11/06/13
Proposal No.	SP27486
Project	Manny Rodriguez Park
Ship to State/Zip	FL 32725
Customer Service Representative	JenChe
Sales Representative	Brent Shryock
Payment Terms	TBD

Site Location: 480107
Manny Rodriguez Park
2345 Providence Blvd
Deltona, 32725
United States

Invoice-to: 480107
Manny Rodriguez Park
2345 Providence Blvd
Deltona, FL 32725
United States

Ship-to:
Manny Rodriguez Park
2345 Providence Blvd
Deltona, FL 32725
United States

Qty.	Item No.	Description	Unit Price	Retail Price	Disc. %	Net Price
		U.S. Communities Contract #110171 Liftgate service required				
1	GXY945010-3717	ASTEROPE	44,270.00	44,270.00	19.00	35,858.70
2	ELE400024-3717BL	Spinner Bowl In Ground COLORS TBD	940.00	1,880.00	19.00	1,522.80
1	GXY801700-3717	Vega In Ground	2,270.00	2,270.00	19.00	1,838.70
1	INSTALLATION	Installation KOMPAN Equipment	12,105.00	12,105.00	5.00	11,499.75
1	FRT-PA	Freight Middletown PA	1,524.00	1,524.00		1,524.00
1	ENG STAMP DRW 2	Engineer Stamp Drawing	1,500.00	1,500.00		1,500.00
1	OTHER SERVICES	Pulling Permits	750.00	750.00		750.00
Total						**54,493.95**

Comments:
Please allow 8-10 weeks for product delivery upon order placement.
This quote includes a charge for liftgate service.
Charges for payment / performance bonding are not included. An appropriate amount will be added if applicable.
The actual cost of the permit will be an additional charge - to be determined at the time the permit is pulled.
Price assumes NO overhead (13'6" or lower) or underground (within 3'6" of surface) obstacles.

Terms for credit will be established upon approval.
Customer is responsible for removal of any existing equipment / obstacles prior to installation.
Customer is responsible to do all site work prior to installation.
This proposal assumes that there is no Prevailing Wage requirement for this job.
Customer is responsible for fall zones and resilient surfacing appropriate to the height of the equipment

Summary:

	Retail Price	Discount	Net Price
Subtotal - KOMPAN Products	48,420.00	9,199.80	39,220.20
Subtotal - Other Products	0.00	0.00	0.00
Subtotal - Surfacing	0.00	0.00	0.00
Subtotal - Installation & Other Services	14,355.00	605.25	13,749.75
Subtotal - Freight	1,524.00	0.00	1,524.00
Subtotal	**64,299.00**	**9,805.05**	**54,493.95**

Estimated Tax Rate	(Applicable sales tax will be added unless a valid tax exemption certificate is provided. This amount is only an estimate of your tax liability.)	0.00
Total		**54,493.95**

Your acceptance of this proposal constitutes a valid order request and includes acceptance of terms and conditions contained within the Master Argeement which is hereby acknowledged. Acceptance of this proposal by KOMPAN is acknowledged by issuance of an order confirmation by an authorized KOMPAN representative. Prices in this quotation are good for 60 days.
This proposal may be withdrawn if not accpeted by 11/05/13.
KOMPAN Products are "Buy American" qualified, and compliant with the Buy American Act of 1933 and the "Buy American"provision of the ARRA of 2009

KOMPAN Authorized Signature:

Accepted By (signature): _____

Accepted By (please print): _____

Date: _____

MANNY RODRIGUEZ PARK KOMPAN®

Project:
Date: 09/09/13
Model: As Noted
PSC:
Rep: KOMPAN - Brent Shryock
Designer: MicNol

SCALE: 1/8" = 1'-0"

INCH 1
CM 1 2

FOR QUOTING ONLY
NOT FOR CONSTRUCTION

Printed in USA by KOMPAN. © 2013 KOMPAN, Inc., Tacoma, WA, USA. 800-426-9788

All composite structures shown require a site grade of 1% maximum.

For surface mount options, the concrete requirements may be up to 5½" of 3,500 psi minimum compressive strength. Contact KOMPAN for specific product requirements.

Site representation is based upon estimated site dimensions and cannot be used as an accurate way of determining site area.

Layout is in accordance with ASTM F1487-11

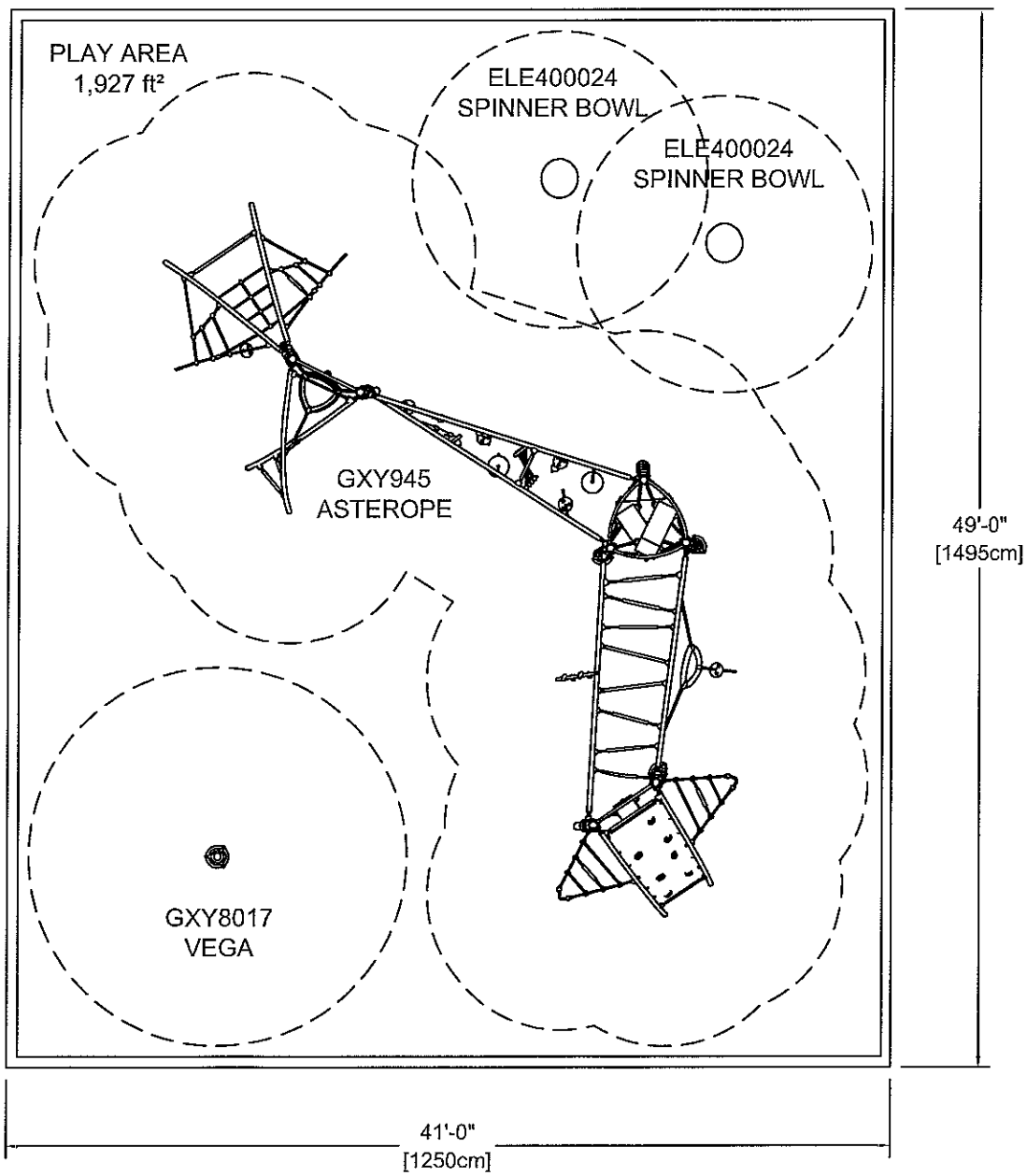

Playground Design #1	BCI Burke	GameTime	Landscape Structures	KOMPAN	Krauss Craft	[illegible]	Miracle Recreation	PlayLand
Play Value	Proposal summary							
Number of kids that can play	113	76-85	50	35-40	74-79	?	65-75	75
Number of play components	29	24	15	7	15	14 ??	16	36
Number of Accessible components	29	24	15	4	4	14 ??	8	34
Creativity		8	8	8				
Total Play Value (60 Pts)	47	56	53	54	51	48	51	51
Asthetics :	Point Value 0-10 (For all 5 designs)							
Color Options/ Decks/Structure Size Uprights								
Total Asthetics (10Pts)	8	9	9	9	7	6	9	9
Durability	Point Value 0-15							
Warranty								
Maintenance								
Total Durability (15 Pts)	13	14	12	13	12	10	13	14
Cost	Point Value 0-5							
Materials/components	$32 674 00	$30,364 68	$34 662 50	$31,845.00	$29,809 68	$34,284.00	$25 502 00	$36 147.06
Installation	$12,849 25	$12 333 12	$10,878 00	$13 724 00	$10 279 20	Not specified	$9 907 00	$12 199.63
Surfacing	$3 710 00	$6,878 88	$5,610 00	$6 950 00	$2,397.00	$2 163.00	$2 306.00	$1,800 00
Freight	$1,528.00	$1,361.86	$1,900.00	$2,094.49	$2,900.00	$3,820.39	$1,532.00	$525.00
Total Cost								
Discounts			-$2,080 00	-$4 565 70				
Grand Totals			$50,970.00	$50,047.79				
Total Cost Value (5 Pts)	10	13	13	12	12	10	12	12
	78	92	87	88	82	74	86	86

	Manufacturer							
Playground Design #2	BCI Burke	GameTime	Landscape Structures	KOMPAN	Krauss Craft	[illegible]	Miracle Recreation	PlayLand
Play Value	Proposal summary							
Number of kids that can play	59 37-40		30 18-20	40-45	??	25-35		39
Number of play components	13	28	9	8	12	13	11	25
Number of Accessible components	13	27	9	3	7	13	3	25
Creativity		8	8	8				
Total Play Value 60 Pts	47	57	53	54	48	48	45	50
Cost	Point Value 0-5							
Materials/components	$16 320 00	$16 808.04	$17 753.00	$18 525 00	$14 914.41	$18 119.00	$14 436 00	$17,427 47
Installation	$7,334 75	$6 759 36	$6 600 00	$7,410 00	$5,657 19 ??		$5 944 00	$5.881 77
Surfacing	$0.00	$0 00	$0 00	$0.00	$0 00			
Freight	$1,212.25	$1,194.66	$1,600.00	$1,201.63	$550.00	$1,600.69	$1,374.00	$1,470.00
Total Cost	[illegible]	[illegible]	[illegible]	[illegible]	[illegible]	[illegible]	[illegible]	[illegible]
Discounts			-$1,065.00	-$2,223 00				
Grand Totals			$24,888.00	$24,913.63				
Total Cost Value (5 Pts)	12	13	10	12	12	12	12	12
	80	93	84	88	79	76	80	85

Playground Design #3	BCI Burke	GameTime	Landscape Structures	KOMPAN	Krauss Craft	[illegible]	Miracle Recreation	PlayLand
	Manufacturer							
Play Value	Proposal summary							
Number of kids that can play	258	197-203	100	70-80	190-200		155-165	168
Number of play components	47	38	21	14	34	24	24	36
Number of Accessible components	38	35	21	14	26	24	24	33
Creativity		8	8	9				
Total Play Value (60 Pts)	53	55	49	48	50	45	50	45
Cost	Cost Value (45)							
Materials/components	$83,551.00	$81,337.28	$83,712.00	$95,673.00	$85,641.93	$91,155.00	$51,750.00	$86,787.72
Installation	$32,857.00	$33,907.39	$38,508.00	$28,702.00	$29,531.70 ??		$20,700.00	$29,124.48
Surfacing	$59,815.52	$104,412.76		$0.00	$68,758.00		$40,802.00	
Freight	$3,415.00	$4,535.12	$3,700.00	$3,852.93	$1,950.00	$6,478.39	$6,618.00	$3,980.00
Total Cost	[illegible]	[illegible]	[illegible]	[illegible]	[illegible]	[illegible]	[illegible]	[illegible]
Discounts			-$6,697.00	-$11,109.80				
Grand Totals			$119,223.00	$117,118.13				
TOTAL COST/VALUE (45 Pts)	13	13	12	12	12	9	10	12
	87	91	82	82	81	70	83	83

Playground Design #4	BCI Burke	GameTime	Landscape Structures	KOMPAN	Krauss Craft	[illegible]	Miracle Recreation	PlayLand
	Manufacturer							
Play Value	Proposal summary							
Number of kids that can play	143	88-92	55	60-70	199-209		90-100	84
Number of play components	27	27	5	15	50	24	17	31
Number of Accessible components	27	23	15	4	14	24	12	31
Creativity		8	8	8				
Total Play Value (60 Pts)	47	55	45	40	48	48	52	45
Cost	Cost Value (45)							
Materials/components	$59,810.00	$57,136.08	$63,191.00	$61,370.00	$56,844.93	$40,993.60	$40,493.00	$62,509.51
Installation	$23,521.00	$23,588.35	$24,013.00	$5,868.00	$19,601.70 ??		$13,498.00	$21,096.69
Surfacing	$0.00			$19,411.00				
Freight	$1,650.00	$2,375.83	$1,500.00	$3,028.99	$2,800.00	$3,733.26	$1,661.00	$1,295.00
Total Cost	[illegible]	$83,100.26	[illegible]	[illegible]	[illegible]	[illegible]	[illegible]	[illegible]
Discounts			-$3,791.00	-$7,694.35				
Grand Totals			$84,913.00	$81,983.64				
TOTAL COST/VALUE (45 Pts)	13	13	10	12	12	9	10	12
	81	91	76	83	79	73	85	80

Playground Design #5	BCI Burke	GameTime	Landscape Structures	KOMPAN	Krauss Craft	[illegible]	Miracle Recreation	PlayLand
	Manufacturer							
Play Value	10							
Number of kids that can play	151-155		100	80-90	160-165	13	155-165	200
Number of play components		34	20	19	30	13	27	47
Number of Accessible components		34	15	9	19		16	43
Creativity		8		8				
Total Play Value (60 Pts)	53	55	48	50	54	45	52	50
Cost	Cost Value (45)							
Materials/components	$73,819.00	$73,710.72	$90,201.00	$73,673.00	$82,859.67 ??		$75,559.00	$82,008.34
Installation	$30,689.00	$30,333.95	$31,570.00	$33,187.00	$29,531.70 ??		$33,249.00	$27,647.44
Surfacing	$12,060.00	$12,061.06	$5,697.00	$15,149.50	$68,758.00 ??		$5,040.00	$8,627.58
Freight	$3,430.00	$3,662.34	$5,100.00	$9,204.15	$1,950.00 ??		$5,578.00	$1,530.00
Total Cost	[illegible]	[illegible]	[illegible]	[illegible]	[illegible]	[illegible]	[illegible]	[illegible]
Discounts			-$12,632.00	-$10,541.60				
Grand Totals			$119,936.00	$120,672.05				
TOTAL COST/VALUE (45 Pts)	13	13	12	12	12	10	12	12
	87	91	81	84	85	71	87	85
TOTAL POINTS ALL DESIGNS	413	458	410	425	406	364	421	419
RANKING (Designs)	5	1	6	2	7	8	3	4
RANKING (Technical)	5	1	3	2	7	8	4	6
Avg Desgin Scores	82.6	91.6	82	85	81.2	72.8	84.2	83.8
Avg Proposal/Technical Scores	82.32	88.08	84.58	87.07	78.52	67.97	83.25	81.32
Grand Total Avg Score	164.92	179.68	166.58	172.07	159.72	140.77	167.45	165.12
FINAL RANKING	**6**	**1**	**4**	**2**	**7**	**8**	**3**	**5**

Playground Design #1	BCI Burke	GameTime	[illegible]	KOMPAN	Krauss Craft	[illegible]	Miracle Recreation	PlayLand
Play Value				Proposal summary				
Number of kids that can play	113	76-85	50	36-40	74-79	?	65-75	75
Number of play components	29	24	15	7	15	14 ??	16	36
Number of Accessible components	29	24	15	4	4	14 ??	8	34
Creativity		8	8	8				
Total Play Value (60 Pts)	47	56	53	51	51	45	51	51
Aesthetics				Point Value 0-10 (For all 5 designs)				
Color Options/ Decks/Structure Size Uprights								
Total Aesthetics (10Pts)	8	8	8	8	7	6	8	8
Reliability				Point Value 0-10				
Warranty								
Maintenance								
Total Reliability (10 Pts)	11	11	11	11	11	10	11	11
Materials/components	$32,674.00	$30,364.68	$34,662.50	$31,845.00	$29,809.68	$34,284.00	$25,502.00	$36,147.06
Installation	$12,849.25	$12,333.12	$10,878.00	$13,724.00	$10,279.20	Not specified	$9,907.00	$12,199.63
Surfacing	$3,710.00	$6,878.88	$5,610.00	$6,950.00	$2,397.00	$2,163.00	$2,306.00	$1,800.00
Freight	$1,528.00	$1,361.86	$1,900.00	$2,094.49	$2,900.00	$3,820.39	$1,532.00	$525.00
Discounts			-$2,080.00	-$4,565.70				
Grand Totals			$50,970.00	$50,047.79				
	10	13	13	12	12	10	12	12
	78	92	87	88	82	74	86	86

Playground Design #2	BCI Burke	GameTime	[illegible]	KOMPAN	Krauss Craft	[illegible]	Miracle Recreation	PlayLand
Play Value				Proposal summary				
Number of kids that can play	59 37-40		30 18-20		40-45	??	25-35	39
Number of play components	13	28	9	8	12	13	11	25
Number of Accessible components	13	27	9	3	7	13	3	25
Creativity		8	8	8				
Total Play Value 60 Pts	47	57	53	54	48	48	45	59
Materials/components	$16,320.00	$16,808.04	$17,753.00	$18,525.00	$14,914.41	$18,119.00	$14,436.00	$17,427.47
Installation	$7,334 75	$6,758.36	$6,600.00	$7,410.00	$5,657 19 ??		$5,944.00	$5,881 77
Surfacing	$0.00	$0.00	$0.00	$0.00	$0.00			
Freight	$1,212.25	$1,194.66	$1,600.00	$1,201.63	$550.00	$1,600.69	$1,374.00	$1,470.00
Discounts			-$1,065.00	-$2,223.00				
Grand Totals			$24,888.00	$24,913.63				
	12	13	10	12	12	12	12	12
	80	93	84	88	79	76	80	85

Playground Design #3	BCI Burke	GameTime	[illegible]	KOMPAN	Krauss Craft	[illegible]	Miracle Recreation	PlayLand
Play Value				Proposal summary				
Number of kids that can play	258 197-203		100 70-80		190-200		155-165	168
Number of play components	47	38	21	14	34	24	24	36
Number of Accessible components	38	35	21	14	26	24	24	33
Creativity		8	8	9				
Total Play Value (60 Pts)	53	55	49	48	54	48	50	48
Materials/components	$83,551.00	$81,337.28	$83,712.00	$95,673.00	$85,641.93	$91,155.00	$61,750.00	$86,787.72
Installation	$32,857.00	$33,907 39	$38,508.00	$28,702.00	$29,531 70 ??		$28,700.00	$29,124 48
Surfacing	$59,815.52	$104,412.76		$0.00	$68,758.00		$40,802.00	
Freight	$3,415.00	$4,535.12	$3,700.00	$3,852.93	$1,950.00	$6,478.39	$6,618.00	$3,980.00
Discounts			-$6,697.00	-$11,109.80				
Grand Totals			$119,223.00	$117,118.13				
	13	13	12	12	12	9	10	12
	87	91	82	82	81	70	83	83

Playground Design #4	BCI Burke	GameTime	[illegible]	KOMPAN	Krauss Craft	[illegible]	Miracle Recreation	PlayLand
Play Value				Proposal summary				
Number of kids that can play	143 88-92		55 60-70		199-209		90-100	84
Number of play components	27	27	5	15	50	24	17	31
Number of Accessible components	27	23	15	4	14	24	12	31
Creativity		8	8	8				
Total Play Value (60 Pts)	47	58	45	49	48	48	42	48
Materials/components	$59,810.00	$57,136.08	$63,191.00	$61,370.00	$56,844.93	$40,993.60	$40,493.00	$62,509.51
Installation	$23,521 00	$23,588.35	$24,013.00	$5,868.00	$19,601.70 ??		$13.498.00	$21,096.69
Surfacing	$0.00			$19,411.00				
Freight	$1,650.00	$2,376.83	$1,600.00	$3,028.99	$2,800.00	$3,733.26	$1,661.00	$1,295.00
		$83,100.26						
Discounts			-$3,791.00	-$7,694.35				
Grand Totals			$84,913.00	$81,983.64				
	13	13	10	12	12	9	10	12
	81	91	76	83	79	73	85	80

Playground Design #5	BCI Burke	GameTime	[illegible]	KOMPAN	Krauss Craft	[illegible]	Miracle Recreation	PlayLand
Play Value				10				
Number of kids that can play	151-155		100 80-90		160-165		13 155-165	200
Number of play components		34	20	19	30	13	27	47
Number of Accessible components		34	15	9	19		16	43
Creativity		8		8				
Total Play Value (60 Pts)	53	54	45	50	54	45	52	60
Materials/components	$73,819.00	$73,710.72	$90,201.00	$73,673.00	$82,859.67 ??		$75,559.00	$82,008.34
Installation	$30,689.00	$30,333.95	$31,570.00	$33,187.00	$29,531 70 ??		$33,249.00	$27,647 44
Surfacing	$12,060.00	$12,061.06	$5,697.00	$15,149.50	$68,758.00 ??		$5,040.00	$8,627.58
Freight	$3,430.00	$3,662 34	$5,100.00	$9,204.15	$1,950.00 ??		$5,578.00	$1,530.00
Discounts			-$12,632.00	-$10,541.60				
Grand Totals			$119,936.00	$120,672.05				
	13	13	12	12	12	10	12	12
	87	91	81	84	85	71	87	85
TOTAL POINTS ALL DESIGNS	413	458	410	425	406	364	421	419
RANKING (Designs)	5	1	6	2	7	8	3	4
RANKING (Technical)	5	1	3	2	7	8	4	6
Avg Design Scores	82.6	91.6	82	85	81.2	72.8	84.2	83.8
Avg Proposal/Technical Scores	82.32	88.03	84.58	87.07	78.52	67.97	83.25	81.32
Grand Total Avg Score	164.92	179.68	166.58	172.07	159.72	140.77	167.45	165.12
FINAL RANKING	6	1	4	2	7	8	3	5

	Company							
Discounts	**Gametime**	**Kompan**	**LCI**	**Krauss**	**Miracle**	**Playcore**	**Burke**	**Playland**
A. Equipment	24%	10%	6%	13%	Various	26%	11%	20%
B. Surfacing	18%	10%	6%	13%	20%	26%	3	10-50%
C. Site Furnishings	6%	12.50%	6%	13%	5% to 15%	26%	11	10%
D. Related Products	3% to 10%	5%	6%	13%	5% to 15%	26%	11	5-20%
e. Services	Net, no discount	5%	0	per state				N/A
Volume Discounts	Add'l discount: 5% on $50 - 75K 10% on $75 - 100k 15% on > $100k	Add'l discount: 2% on $100k - $199,999 5% on $200k - $499,999 10% on > $500k	Add'l discount: 2% on > $80k	Add'l discount:	Add'l discount:	Add'l discount:	Add'l discount:	Add'l discount:
Rebates	none	none	none	none	1% - $250k/yr 2% - $500k/yr 3% - $750k/yr 5% - $1MM/yr			

U.S. COMMUNITIES
GOVERNMENT PURCHASING ALLIANCE

MASTER INTERGOVERNMENTAL COOPERATIVE PURCHASING AGREEMENT

This Master Intergovernmental Cooperative Purchasing Agreement ("Agreement") is made between certain government agencies that execute a Lead Public Agency Certificate (collectively, "Lead Public Agencies") to be appended and made a part hereof and other government agencies ("Participating Public Agencies") that agree to the terms and conditions hereof through the U.S. Communities registration process and made a part hereof.

RECITALS

WHEREAS, after a competitive solicitation and selection process by Lead Public Agencies, in compliance with their own policies, procedures, rules and regulations, a number of suppliers (each, a "Contract Supplier") have entered into Master Agreements with Lead Public Agencies to provide a variety of goods, products and services based on national and international volumes (herein "Products and Services");

WHEREAS, Master Agreements are made available by Lead Public Agencies through U.S. Communities and provide that Participating Public Agencies may purchase Products and Services on the same terms, conditions and pricing as the Lead Public Agency, subject to any applicable local purchasing ordinances and the laws of the State of purchase;

WHEREAS, the parties desire to comply with the requirements and formalities of the Intergovernmental Cooperation Act as may be applicable to the laws of the State of purchase;

WHEREAS, the parties hereto desire to conserve resources and reduce procurement cost;

WHEREAS, the parties hereto desire to improve the efficiency, effectiveness and economy of the procurement of necessary Products and Services;

NOW, THEREFORE, in consideration of the mutual promises contained in this Agreement, and of the mutual benefits to result, the parties agree as follows:

1. That each party will facilitate the cooperative procurement of Products and Services.
2. That the procurement of Products and Services subject to this Agreement shall be conducted in accordance with and subject to the relevant statutes, ordinances, rules and regulations that govern each party's procurement practices.
3. That the cooperative use of solicitations obtained by a party to this Agreement shall be in accordance with the terms and conditions of the solicitation, except as modification of those terms and conditions is otherwise allowed or required by applicable law.
4. That the Lead Public Agencies will make available, upon reasonable request and subject to convenience, information which may assist in improving the effectiveness, efficiency and economy of Participating Public Agencies' procurement of Products and Services.
5. That the Participating Public Agency will make timely payments to the Contract Supplier for Products and Services received in accordance with the terms and conditions of the procurement. Payment, inspections and acceptance of Products and Services ordered by the Participating Public Agency shall be the exclusive obligation of such Participating Public Agency. Disputes between the Participating Public Agency and Contract Supplier are to be resolved in accord with the law and venue rules of the State of purchase.
6. The Participating Public Agency shall not use this Agreement as a method for obtaining additional concessions or reduced prices for similar products or services.
7. The Participating Public Agency shall be responsible for the ordering of Products and Services under this Agreement. A Lead Public Agency shall not be liable in any fashion for any violation by a Participating Public Agency, and the Participating Public Agency shall hold the Lead Public Agency harmless from any liability that may arise from action or inaction of the Participating Public Agency.
8. The exercise of any rights or remedies by the Participating Public Agency shall be the exclusive obligation of such Participating Public Agency.
9. This Agreement shall remain in effect until termination by a party giving thirty (30) days prior written notice to U.S. Communities at 2999 Oak Road, Suite 710, Walnut Creek, CA 94597.
10. This Agreement shall become effective after execution of the Lead Public Agency Certificate or Participating Public Agency registration, as applicable.

Lead Public Agency Certificate

LEAD PUBLIC AGENCY CERTIFICATE

I hereby acknowledge, on behalf of Fresno Unified School District (the "Lead Public Agency") that I have read and agree to the general terms and conditions set forth in the enclosed Master Intergovernmental Cooperative Purchasing Agreement (MICPA) regulating the use of the Master Agreements and purchase of Products that from time to time are made available by Lead Public Agency to Participating Public Agencies nationwide through U.S. Communities. Copies of Master Agreements and any amendments thereto made available by Lead Public Agency will be provided to Suppliers and U.S Communities to facilitate use by Participating Public Agencies.

I understand that the purchase of one or more Products under the provisions of the MICPA is at the sole and complete discretion of the Participating Public Agency.

Authorized Signature, Lead Government Agency

7-31-12

Date

LEAD PUBLIC AGENCY CERTIFICATE

I hereby acknowledge, on behalf of the City of Los Angeles (the "Lead Public Agency") that I have read and agree to the general terms and conditions set forth in the enclosed Master Intergovernmental Cooperative Purchasing Agreement (MICPA) regulating the use of the Master Agreements and purchase of Products that from time to time are made available by Lead Public Agency to Participating Public Agencies nationwide through U.S Communities. Copies of Master Agreements and any amendments thereto made available by Lead Public Agency will be provided to Suppliers and U.S. Communities to facilitate use by Participating Public Agencies

I understand that the purchase of one or more Products under the provisions of the MICPA is at the sole and complete discretion of the Participating Public Agency.

Kenneth F. Desoiwitz

Authorized Signature, Lead Government Agency

12-6-07

Date

LEAD PUBLIC AGENCY CERTIFICATE

I hereby acknowledge, on behalf of the City of Charlotte (Mecklenburg County) (the "Lead Public Agency") that I have read and agree to the general terms and conditions set forth in the enclosed Master Intergovernmental Cooperative Purchasing Agreement (MICPA) regulating the use of the Master Agreements and purchase of Products that from time to time are made available by Lead Public Agency to Participating Public Agencies nationwide through U.S. Communities. Copies of Master Agreements and any amendments thereto made available by Lead Public Agency will be provided to Vendors and U.S. Communities to facilitate use by Participating Public Agencies.

I understand that the purchase of one or more Products under the provisions of the MICPA is at the sole and complete discretion of the Participating Public Agency.

John C. Trunk

Authorized Signature

JOHN C. TRUNK

PROCUREMENT SERVICES DIRECTOR

Name and Title of Signer

10-23-03

Date

Lead Public Agency Certificate

LEAD PUBLIC AGENCY CERTIFICATE

I hereby acknowledge, on behalf of _City of _San Antonio__[LPA] (the "Lead Public Agency") that I have read and agree to the general terms and conditions set forth in the enclosed Master Intergovernmental Cooperative Purchasing Agreement ("MICPA") regulating the use of the Master Agreements and purchase of Products that from time to time are made available by Lead Public Agency to Participating Public Agencies nationwide through U.S. Communities. Copies of Master Agreements and any amendments thereto made available by Lead Public Agency will be provided to Suppliers and U.S. Communities to facilitate use by Participating Public Agencies.

I understand that the purchase of one or more Products under the provisions of the MICPA is at the sole and complete discretion of the Participating Public Agency.

Authorized Signature, Lead Public Agency

Janie B. Cantu
Printed Name

4/10/09
Date

LEAD PUBLIC AGENCY CERTIFICATE

I hereby acknowledge, on behalf of USD 259, Wichita Public Schools, KS (the "Lead Public Agency") that I have read and agree to the general terms and conditions set forth in the enclosed Master Intergovernmental Cooperative Purchasing Agreement (MICPA) regulating the use of the Master Agreements and purchase of Products that from time to time are made available by Lead Public Agency to Participating Public Agencies nationwide through U.S. Communities. Copies of Master Agreements and any amendments thereto made available by Lead Public Agency will be provided to Vendors and U.S. Communities to facilitate use by Participating Public Agencies.

I understand that the purchase of one or more Products under the provisions of the MICPA is at the sole and complete discretion of the Participating Public Agency.

Authorized Signature

Darren C. Muci
RFP 02-04-011 BOE Approval 1/13/03

Name and Title of Signer

Date

Lead Public Agency Certificate

LEAD PUBLIC AGENCY CERTIFICATE

I hereby acknowledge, on behalf of the public agency identified (the "Lead Public Agency") that I have read and agree to the general terms and conditions set forth in the enclosed Master Intergovernmental Cooperative Purchasing Agreement (MICPA) regulating the use of the Master Agreements and purchase of Products that from time to time are made available by Lead Public Agency to Participating Public Agencies nationwide through U.S. Communities. Copies of Master Agreements and any amendments thereto made available by Lead Public Agency will be provided to Suppliers and U.S. Communities to facilitate use by Participating Public Agencies.

I understand that the purchase of one or more Products under the provisions of the MICPA is at the sole and complete discretion of the Participating Public Agency.

Cathy A Muse

Authorized Signature, Lead Government Agency

April 15, 2009

Date

NCSU CONTRACT CONTROL # 19735

LEAD PUBLIC AGENCY CERTIFICATE

(U.S. Communities/Canadian Communities)

I hereby acknowledge, on behalf of North Carolina State University (the "Lead Public Agency") that I have read and agree to the general terms and conditions set forth in the enclosed Master Intergovernmental Cooperative Purchasing Agreement (MICPA) regulating the use of the Master Agreements and purchase of Products that from time to time are made available by Lead Public Agency to Participating Public Agencies nationwide through U.S. Communities and Canadian Communities. Copies of Master Agreements and any amendments thereto made available by Lead Public Agency will be provided to Suppliers, U.S. Communities and Canadian Communities to facilitate use by Participating Public Agencies.

I understand that the purchase of one or more Products under the provisions of the MICPA is at the sole and complete discretion of the Participating Public Agency.

Sheron D. Lassiter, North Carolina State University
Director, Materials Management

12/10/2012
Date

LEAD PUBLIC AGENCY CERTIFICATE

I hereby acknowledge, on behalf of the City/County of Denver (the "Lead Public Agency") that I have read and agree to the general terms and conditions set forth in the enclosed Master Intergovernmental Cooperative Purchasing Agreement (MICPA) regulating the use of the Master Agreements and purchase of Products that from time to time are made available by Lead Public Agency to Participating Public Agencies nationwide through U.S. Communities. Copies of Master Agreements and any amendments thereto made available by Lead Public Agency will be provided to Suppliers and U.S. Communities to facilitate use by Participating Public Agencies.

I understand that the purchase of one or more Products under the provisions of the MICPA is at the sole and complete discretion of the Participating Public Agency.

Authorized Signature, Lead Government Agency

12-1-08

Date

EXAMPLE OF LEAD PUBLIC AGENCY CERTIFICATE

I hereby acknowledge, on behalf of the public agency identified (the "Lead Public Agency") that I have read and agree to the general terms and conditions set forth in the enclosed Master Intergovernmental Cooperative Purchasing Agreement (MICPA) regulating the use of the Master Agreements and purchase of Products that from time to time are made available by Lead Public Agency to Participating Public Agencies nationwide through U.S. Communities. Copies of Master Agreements and any amendments thereto made available by Lead Public Agency will be provided to Suppliers and U.S. Communities to facilitate use by Participating Public Agencies.

I understand that the purchase of one or more Products under the provisions of the MICPA is at the sole and complete discretion of the Participating Public Agency.

Authorized Signature, Lead Government Agency

by:
Joe Sandoval, Division Manager
Purchasing & Contract Services
County of Los Angeles

1-2-06
Date

Ver 1.0

Lead Public Agency Certificate

LEAD PUBLIC AGENCY CERTIFICATE

I hereby acknowledge, on behalf of Cobb County, Georgia (the "Lead Public Agency"), that I have read and agree to the general terms and conditions set forth in the enclosed Master Intergovernmental Cooperative Purchasing Agreement ("MICPA") regulating the use of the Master Agreements and purchase of Products that from time to time are made available by Lead Public Agency to Participating Public Agencies nationwide through U.S. Communities. Copies of Master Agreements and any amendments thereto made available by Lead Public Agency will be provided to Suppliers and U.S. Communities to facilitate use by Participating Public Agencies.

I understand that the purchase of one or more Products under the provisions of the MICPA is at the sole and complete discretion of the Participating Public Agency.

Authorized Signature, Lead Public Agency

RICHARD A. BRUN

Printed Name

7-8-2009

Date

LEAD PUBLIC AGENCY CERTIFICATE
(U.S. Communities/Canadian Communities)

I hereby acknowledge, on behalf of the public agency identified (the "Lead Public Agency") that I have read and agree to the general terms and conditions set forth in the enclosed Master Intergovernmental Cooperative Purchasing Agreement (MICPA) regulating the use of the Master Agreements and purchase of Products that from time to time are made available by Lead Public Agency to Participating Public Agencies nationwide through U.S. Communities and Canadian Communities. Copies of Master Agreements and any amendments thereto made available by Lead Public Agency will be provided to Suppliers, U.S. Communities and Canadian Communities to facilitate use by Participating Public Agencies.

I understand that the purchase of one or more Products under the provisions of the MICPA is at the sole and complete discretion of the Participating Public Agency.

Authorized Signature, Lead Government Agency

7-26-11

Date

LEAD PUBLIC AGENCY CERTIFICATE

I hereby acknowledge, on behalf of the County of Maricopa, Arizona (the "Lead Public Agency") that, I have read and agree to the general terms and conditions set forth in the enclosed Master Intergovernmental Cooperative Purchasing Agreement (MICPA) regulating the use of the Master Agreements and purchase of Products that from time to time are made available by Lead Public Agency to Participating Public Agencies nationwide through U.S. Communities. Copies of Master Agreements and any amendments thereto made available by Lead Public Agency will be provided to Vendors and U.S. Communities to facilitate use by Participating Public Agencies.

I understand that the purchase of one or more Products under the provisions of the MICPA is at the sole and complete discretion of the Participating Public Agency.

Authorized Signature

Name and Title of Signer

5/16/03
Date

LEAD PUBLIC AGENCY CERTIFICATE

(U.S. Communities/Canadian Communities)

I hereby acknowledge, on behalf of Harford County Public Schools (the "Lead Public Agency") that I have read and agree to the general terms and conditions set forth in the enclosed Master Intergovernmental Cooperative Purchasing Agreement (MICPA) regulating the use of the Master Agreements and purchase of Products that from time to time are made available by Lead Public Agency to Participating Public Agencies nationwide through U.S. Communities and Canadian Communities. Copies of Master Agreements and any amendments thereto made available by Lead Public Agency will be provided to Suppliers, U.S. Communities and Canadian Communities to facilitate use by Participating Public Agencies.

I understand that the purchase of one or more Products under the provisions of the MICPA is at the sole and complete discretion of the Participating Public Agency.

Jeffrey LaPorta

Jeff LaPorta, Harford County Public Schools

12-7-12

Date

CALIFORNIA STATEWIDE COMMUNITIES DEVELOPMENT AUTHORITY
CERTIFICATE

I hereby acknowledge, on behalf of the California Statewide Communities Development Authority (the "Lead Public Agency"), that I have read and agree to the general terms and conditions set forth in the enclosed Master Intergovernmental Cooperative Purchasing Agreement ("MICPA") regulating the use of the Master Agreement and purchase of products (in this case, licenses) that from time to time are made available by the Lead Public Agency to Participating Public Agencies through U.S. Communities. Copies of the Master Agreement and any amendments thereto made available by Lead Public Agency will be provided to Supplier and U.S. Communities to facilitate use by Participating Public Agencies.

I understand that the purchase of one or more products (in this case, licenses) under the provisions of the MICPA is at the sole and complete discretion of the Participating Public Agency.

D M Harrison
Authorized Signature, California Statewide Communities Development Authority

Secretary
Title

6/27/07
Date

AGENDA MEMO

TO: Mayor & City Commission **AGENDA DATE:** 10/21/2013

FROM: William D. Denny, Acting City Manager **AGENDA ITEM:** 7 - E

SUBJECT: Request for approval to purchase a Clam Body Truck piggybacking NJPA Contract number 070313-P11.

LOCATION: Parks and Recreation

BACKGROUND: The Commission approved $129,000 in the FY 13/14 Budget for the purchase of a Clam Body Truck. This replacement vehicle is utilized to pick up and haul debris to the landfill and is necessary for daily operations and emergencies of the Parks and Recreation Department. The current vehicle was originally purchased and utilized by Public Works in 1996 and then transferred to the Parks and Recreation Department in 2006. Fleet Maintenance is recommending replacing the vehicle as it is unable to reach a speed higher than 55 MPH and has extreme difficulty with any incline. The vehicle is frequently in Fleet Maintenance for service and has 136,000 miles.

NJPA (National Joint Purchasing Alliance) is a public agency that serves as a member-focused cooperative for over 50,000 member agencies nationally. NJPA offers a multitude of cooperatively contracted products, equipment and service opportunities to education and government entities throughout the country. Award for Ground Maintenance and related supplies was awarded to Petersen Industries.

ORIGINATING DEPARTMENT: Parks Recreation

SOURCE OF FUNDS: Capital Equipment Fund

COST: $128,992.58

REVIEWED BY: Finance Director, City Attorney

STAFF RECOMMENDATION PRESENTED BY:	Steve Moore, Parks and Recreation Director - Recommendation is being made to purchase a Clam Body Truck from Petersen Industries, Inc. piggybacking NJPA Contract #070313-PII at a total cost of $128,992.58.
POTENTIAL MOTION:	"I move to approve the purchase of a Clam Body Truck from Petersen Industries, Inc. piggybacking NJPA Contract #070313-PII at a total cost of $128,992.58. "
AGENDA ITEM APPROVED BY:	_____ William D. Denny, Acting City Manager
ATTACHMENTS:	• Proposal from Petersen Industries

Petersen Industries, Inc.

NJPA AWARDED CONTRACT

Contract#: 070313-PII
Category: Heavy & Utility Equipment
Sub Category: Public Utility Equipment
Description: Knuckle-Boom Loaders
Maturity Date: 09/11/2017

Petersen Industries, Inc., choice manufacturer of knuckle boom loaders since the 1950's, offers a wide variety of equipment capable of meeting public works and bulky waste collection needs. Over 900 municipalities, major waste companies, agricultural, arboricultural and aggregate markets add value to their organizations by utilizing Petersen's Lightning Loader grapple trucks for a multitude of applications.

Manufacturing all major components, Petersen controls every aspect of schedule and quality assurance while serving as the single point of responsibility to customers. Petersen's continued commitment to customers, array of versatile designs, and nationwide dealer network contributes to us remaining the grapple truck industry leader.

Overview
Contract Summary
Pricing
Marketing Materials
NJPA Contact Information

HOW TO PURCHASE
Our step-by-step guide

Vendor Contact Info
Casey Hardee – President
Direct Phone: 813-478-1454
Email Casey
www.petersenind.com

Sam Petersen – Vice President
Direct Phone: 863-287-1673
Email Sam
www.petersenind.com

QUOTATION

Petersen Industries, Inc
4000 State Road 60 W
Lake Wales, FL 33859-8201

PAGE NO
1

QUOTE NO
20130160

NJPA: Contract # 070313-PII

BILL TO: CITY OF DELTONA
2345 PROVIDENCE BLVD.

DELTONA, FL 32725

SHIP TO: CITY OF DELTONA
2345 PROVIDENCE BLVD

DELTONA, FL 32725

End user is DELTONA, CITY OF (FL)

DATE	CUSTOMER NO	SLS RP	PYMNT TERMS	LOC	PPD/COL	SHIP DATE	SHIP VIA
10/1/2013	000000001291	SSP	Net 30	02		A S A P	DRIVE AWAY

Unit completion date: 60-75 days after actual chassis arrival or quoted arrival, whichever is later

QTY	ITEM NO	DESCRIPTION	UOM	UNIT PRICE	DISC	EXTENDED PRICE
	0 TL3	MODEL TL3 BASE LOADER	1 00 EA	36,745 00		
	03 11SAI	HEAVY DUTY SWING MOTOR	1 00 EA	1 931 00		
	01 11MQCA	QUADSTICK MECH CONTROLS (UPGRADE)	1 00 EA	3,927 00		
	07 10SB60	STANDARD BUCKET 60"	1 00 EA	INCL		
	10 04 BUWL	BOOM-UP WARNING LIGHT/AUDIBLE ALARM	1 00 EA	INCL		
	10 01ORWL	O-R WARNING LIGHT W/AUDIBLE ALARM	1 00 EA	631 00		
	11 02	LOADER SINGLE COLOR (ENAMEL) AS DEFINED BELOW	1 00 EA	INCL		
	*	PAINT LOADER: PI ORANGE				
1 00	LOADER	AS CONFIGURED ABOVE	EA	$43,234 00	2 00	$42,369 32
	8 11 1824-TBS	MODEL TB-1824 TRASH BODY STANDARD 18FT X 24 CU YD	1 00 EA	15,356 00		
	8 31 25FP	1/4 FLOOR PLATE BODY UPGRADE	1 00 EA	510 00		
	8 32 CW	CONTINUOUS WELDS - SIDE STAKES UPGRADE	1 00 EA	843 00		
	8 36 PISWLCD	PI SELF-WINDING LOAD COVERING DEVICE (ADD-ON)	1 00 EA	724 00		
	8 40 S-BD	STANDARD BARN DOORS FOR BODY	1 00 EA	INCL		
	8 41 TB TFM	TOOL BOX, TRUCK FRAME MOUNTED UNDER BODY (ADD-ON)	1 00 EA	620 00		
	10 06 SS	SINGLE STROBE MOUNTED ON REAR OF BODY	1 00 EA	366 00		
	10 09 LED	LED TYPE BODY LIGHTS 15 EA	1 00 EA	INCL		
	10 10 LED FLASH	AMBER LED FLASHERS IN REAR CORNER POST	1 00 EA	318 00		
	11 02B	BODY COLOR: BLACK	1 00 EA	INCL		
1 00	8 0 DUMP BODY	AS CONFIGURED ABOVE	EA	$18,737 00	2 00	$18 362 26

Continue Next Page

QUOTATION

Petersen Industries, Inc.
4000 State Road 60 W
Lake Wales, FL 33859-8201

PAGE NO
2

QUOTE NO
20130160

NJPA: Contract # 070313-PII

BILL TO: CITY OF DELTONA
2345 PROVIDENCE BLVD

DELTONA FL 32725

SHIP TO: CITY OF DELTONA
2345 PROVIDENCE BLVD

DELTONA, FL 32725

End user is DELTONA, CITY OF (FL)

DATE	CUSTOMER NO	SLS RP	PYMNT TERMS	LOC	PPD/COL	SHIP DATE	SHIP VIA
10/1/2013	000000001291	SSP	Net 30	02		A S A P	DRIVE AWAY

Unit completion date: 60-75 days after actual chassis arrival or quoted arrival, whichever is later

QTY	ITEM NO	DESCRIPTION	UOM	UNIT PRICE	DISC	EXTENDED PRICE
1 00	CHASSIS-OTHER	* STOCK CHASSIS, CHECK FOR AVAILABILITY 2014 FREIGHTLINER M2 106 ISB 240 HP CUMMINS ALLISON 3500RDS	EA	$69 450 00	2 00	$68 061 00

STEVE MOORE / (386) 878-8902

SUBTOTAL	$128 792 58
DELIVERY	200.00
TAX	0 00
TOTAL QUOTE	**$128,992.58**

Signature

Date

TL-3 Lightning Loader®

Versatility

- *Brush/Yard Waste, Sidewalk Removal, Storm Clean Up, Ditch Clean Up, Move Culverts, Guard Rail Repair, First Response Vehicle, Illegal Dumping and more!*

Safety

- *No need for operator to touch the ground, decrease Workman's Comp exposure*
- *Eliminate Hand-Loading*
- *ANSI 245 Compliant*

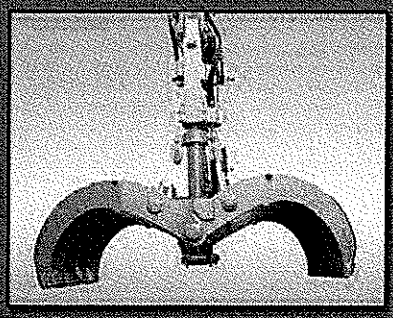

Single Cylinder Continuous Rotation

QUADSTICK® Controls

Efficiency

- *Dramatically lower operating costs*
- *Reach 9 ft below grade*
- *Maximum boom reach of 20 ft with 4 ft tip extension for added manouverability*

4000 SR 60 W • Lake Wales, Florida
800.930.LOAD (5623)

www.petersenind.com

PETERSEN INDUSTRIES

Since 1957

Specifications & Technical Data*

07/12

Note: ***Bold, Italic*** print on diagrams pertains to heavy duty models.

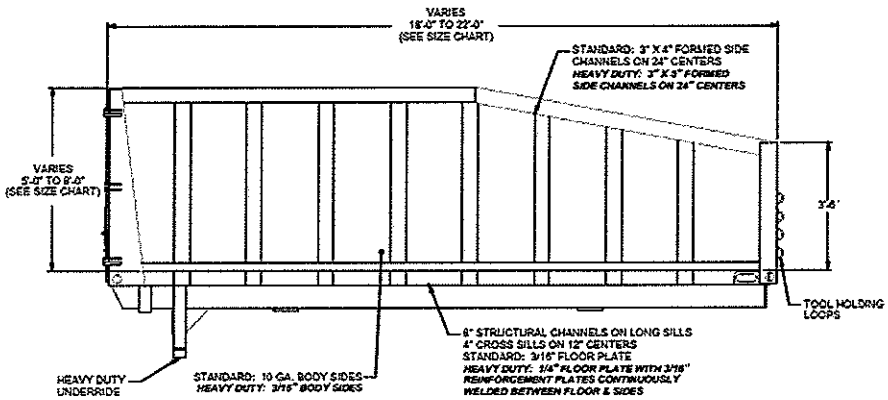

Popular Options

PI Self-Winding Load Cover
Rear Strobe – Mounted on Underride
Amber LED Flashers Mounted on Rear Corner Posts
1/4" Floor Plate
Reinforcement Plates between Floor & Sides
Continuous Welds for Side Posts
Tool Box – Inside Body
Tool Box – Mounted under Body
Dump Body Alarm
LED Lights
Single Door Option

Note: Consult sales representative for a complete listing of available options

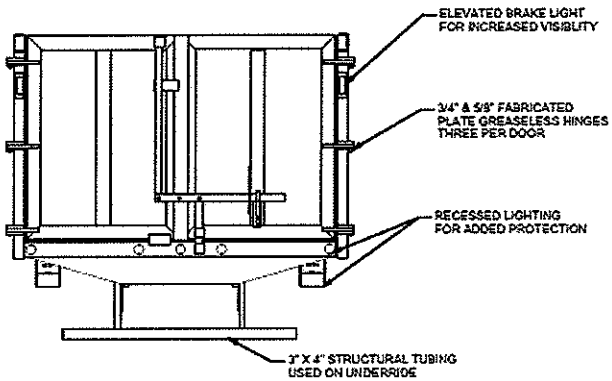

Available Sizes – All Models

Model	Length (ft)	Volume (cu yd)	Side Height (ft)	Length (in)	Min GVWR
1824 TBS	18	24	5	168" C/A	33,000
1828 TBS	18	28	6	168" C/A	33,000
2026 TBS	20	26	5	186" C/A	35,000
2030 TBS	20	30	6	186" C/A	37,000
1824 TBH	18	24	5	168" C/A	33,000
1828 TBH	18	28	6	168" C/A	33,000
2026 TBH	20	26	5	186" C/A	35,000
2030 TBH	20	30	6	186" C/A	37,000
2234 TBH	22	34	6	192" C/A	52,000
2240 TBH	22	40	7	192" C/A	56,000
2245 TBH	22	45	8	192" C/A	56,000

	Standard	Heavy Duty
Body Floor	3/16" single sheet steel plate	1/4" single sheet steel plate, 3/16" reinforcement plates continuously welded between floor and sides
Cross Sills	4" structural channel on 12" centers	4" structural channel on 12" centers
Long Sills	8" structural channel	8" structural channel
Headboard	10 gauge steel continuously welded to the floor, welded loops on front to hold tools	3/16" steel continuously welded to floor, welded loops on front to hold tools
Body Sides	10 gauge steel continuously welded to floor	3/16" steel continuously welded to floor
Side Posts	3" x 4" x 10 gauge formed channels on 24" centers, 1/4" steel plate formed rear corner posts	3 x 5" x 10 gauge formed channel on 24" centers, 1/4" steel plate formed rear corner posts
Barn Doors	Positive locking mechanism on top and bottom, 3 hinges per door with two 5/8" thick straps	Positive locking mechanism on top and bottom, 3 hinges per door with two 5/8" thick straps
Body Hoist	23 ton capacity Venco 6620 dual cylinder hydraulic hoist	23 ton Venco 6620 dual cylinder hydraulic hoist – 22 ft. long body receives a 35 ton Scott LL 3000 telescopic hoist
Body Lights	Meets federal lightning standards, includes elevated brake lights for increased visibility	Meets federal lightning standards, includes elevated brake lights for increased visibility
Paint	High grade primer and enamel finish	High grade primer and enamel finish

**Petersen Industries, Inc. reserves the right to change product design and specifications at any time without notice. There may be more specifications than listed herein. Consult your Petersen dealer for complete specifications.*

PAINT outside of body with 1 coat of high-grade primer and 2 coats of high-grade enamel. Inside of body must receive 1 coat of high-grade primer and 1 coat of high-grade enamel in manufacturer's standard colors. Body to be abrasive blasted prior to paint application.

SAFETY REAR BUMPER constructed of 3 in x 4 in. x 3/16 in. rectangular tubing.

BODY PROP included.

WARRANTY: Three year major structural components.

OPTIONS:

Petersen self winding load covering device
¼ in. floor plate
Tool box – truck frame mounted under body
Single rear strobe
6 in. floor to side slope plates
Tool box – inside body, locking door each side

(Page 2 of 2)

Due to continuing product improvement, specifications are subject to change without notice or obligation. Rev. 012208 BPU

Specifications & Technical Data*

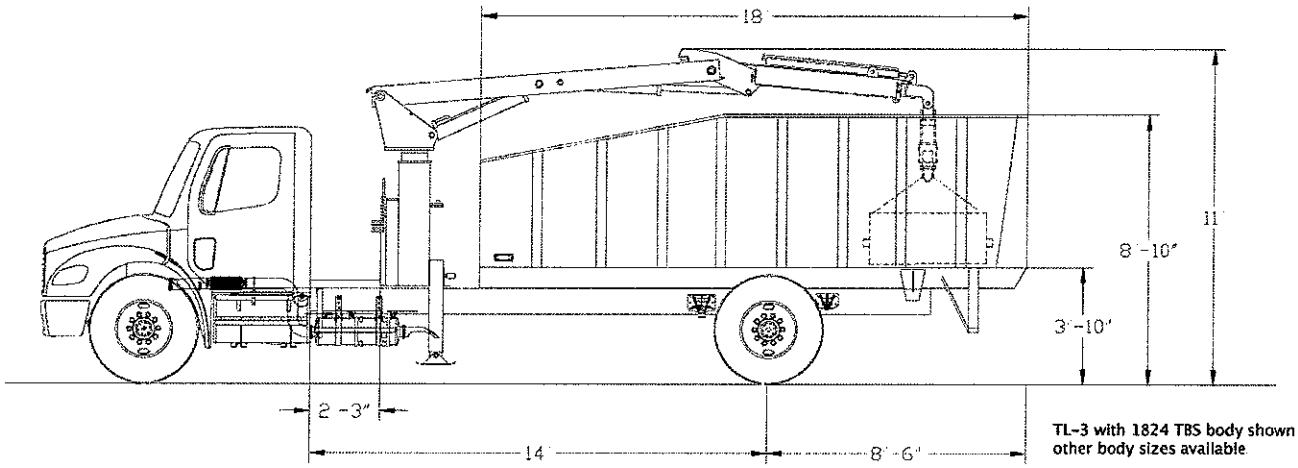

TL-3 with 1824 TBS body shown
other body sizes available

System Description

The model TL-3 Lightning Loader® is a grapple loader mounted to a chassis from behind the cab, equipped with Petersen's standard trash bucket at the end of the boom. The loader operates from a fixed platform located behind the chassis cab.

Control Options

Dual manual controls for outriggers and loader on both sides of the truck for accessibility and visibility come standard on this model. QUADSTICK® mechanically linked dual joystick controls are also an available option on the TL-3. Stationary top-mount control seat is also an option on this model.

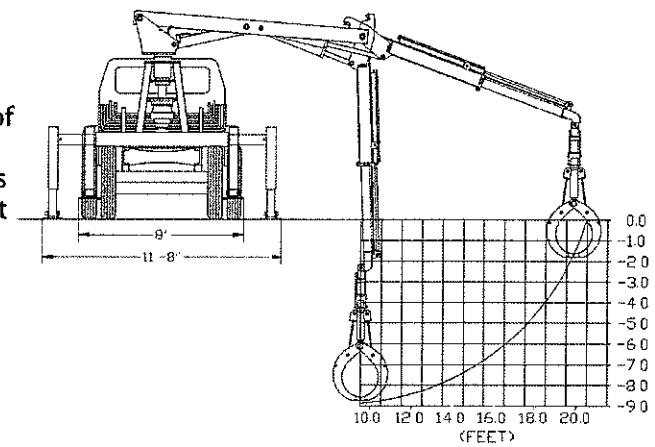

Lift Capacity

Radius	Load Capacity
10 ft radius	7,100 lbs
16 ft radius	4,400 lbs
20 ft radius	3,200 lbs

Note: Weight of attachment not subtracted from above listed lifting capacities. Trash bucket weighs 1,000 lbs. Capacities shown do not exceed 85% vehicle tipping moment (outriggers engaged loader on firm, level ground)

General Specifications

Reach	20 ft
Main Boom & Tip Boom	16 ft
Tip Extension	4 ft
Tare Weight (empty)	23,000 lbs
Outrigger Span	11 ft 8 in
Dump Body Hoist Capacity	23 tons

Recommended Chassis (minimum)

Body Style	Conventional Cab
Cab-to-Axle Dimension	168"
Front Axle Rating	12,000 lbs
Rear Axle Rating	21,000 lbs
GVW Rating	33,000 lbs
Frame	1,500,000 RBM
Frame Thickness	11/32" Minimum
Engine	210 HP Diesel
Transmission	Automatic

**Petersen Industries, Inc. reserves the right to change product design and specifications at any time without notice. There may be more specifications than listed herein. Consult your Petersen dealer for complete specifications.*

TBS/TBH Trash Dump Body

Wide Range of Sizes & Options Available!

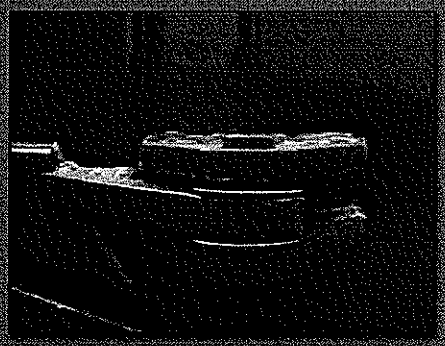

Low Maintenance Door Hinges

- Achieves 45° dump angle without ground contact
- Body design omits 90° angles on lower body sides to avoid rust
- Sloped sides in front give better boom clearance
- 3 year structural warranty
- Self-Winding & Manual Load Cover Options
- ANSI 245 Compliant

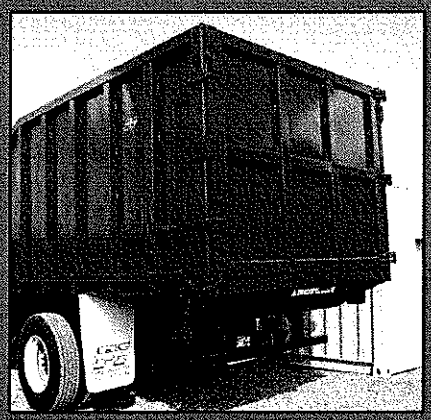

Single Door Option

4000 SR 60 W - Lake Wales, Florida
800.930.LOAD (5623)
www.petersenind.com

PETERSEN INDUSTRIES
Since 1957

- MODEL CL-3
  Citrus Loader

You are here: Products » MODEL TL-3

Model TL-3 Loader & Body

The TL-3 is our most popular and versatile unit. A single operator can load, haul and dump trash with this unit.

- 20 ft. boom reach includes 4 ft. telescoping extension
- Lifts 3,200 lbs. when fully extended at 20 ft.
- At 10 ft. maximum lift capacity is 7,100 lbs.
- All-purpose anti-scalping trash bucket features low maintenance single cylinder design
- Dump body sizes range between 20 and 30 cubic yards
- ANSI Z245 compliant

- Standard Features
- Specifications
- Options
- Watch a Video

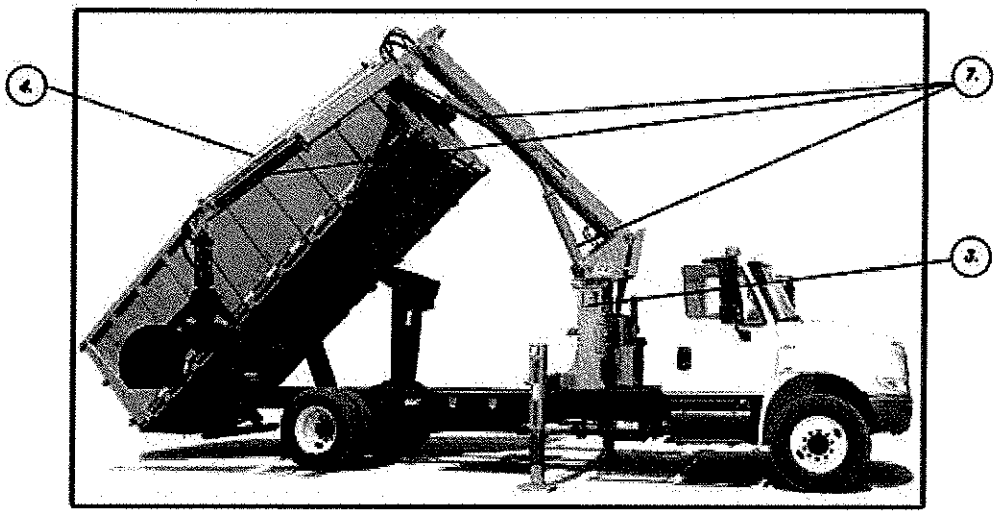

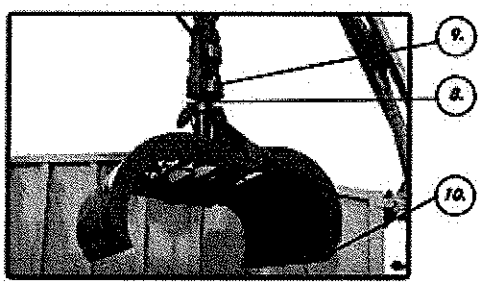

1. **CONTROL OPTIONS:** Greaseless dual walk-thru controls operational from either side of truck. Petersen also offers QUADSTICK® controls and stationary top mount controls with joysticks or valvehandles.
2.
3. **OUTRIGGER STYLE:** Out and down outriggers improve safety in traffic and reduce damage to streets.
4.
5. **NO EXPOSED GEARS:** Boom swing does not have any exposed pinion or bull gears. Petersen's rotary actuator boom swing method is lower maintenance.
6.
7. **TELESCOPIC TIP EXTENSION:** Four foot tip extension adds flexibility and maneuverability. Tip extension hoses are enclosed and protected.
8.
9. **SINGLE POINT OF RESPONSIBILITY:** Petersen Industries manufactures and installs both the grapple loader, including bucket and controls, and the trash dump body.
10.
11. **HEIGHT:** The standard dual walk-thru has an overall height of 11'3".
12.
13. **SAFETY LOCKING VALVES:** Boom cylinders have counterbalance valves, and outrigger down cylinders have pilot operated check valves to prevent leakdown or collapse in the case of hose rupture.
14.
15. **BUCKET ROTATION:** Continuous rotation for convenience.
16.
17. **NO HOSES BELOW BUCKET ROTATOR:** Reduced downtime due to elimination of hoses in bucket jaw area.

18.
19. **ANTI-SCALPING:** Reverse curve motion of bucket helps prevent scalping of lawns.
20.
21. **WARRANTY:** Three year structural, one year hydraulic

---

from Petersen Industries

Page 1 of 17 > >>

May 4, 2012
Dealer of the Year 2011

Congratulations to Best Equipment for ending 2011 with the top sales record, earning them the title of Petersen's Dealer of the Year for 2011!

Pictured: Mike Dahlmann from Best Equipment receiving the award from Sam Petersen during this year's Waste Expo in Las Vegas.

[More]

PETERSEN INDUSTRIES, INC.
4000 SR 60 W
Lake Wales, FL 33859
toll free: 800.930.5623
local: 863.676.1493
fax: 863.676.6844

Dealer Login

- Terms and Conditions
- Privacy Policy

© Copyright 2004-2013 - Petersen Industries, Inc.

PROPOSED VEHICLE/EQUIPMENT REQUEST FORM

Priority No.:	1					
Proposed Item:	Ford Van					
Cost Estimate:	$22,000-$25,000		**Quantity:** 1			
Useful Life:	12 years with a 5-year warranty					
Type of Vehicle:	**Make and Model:** Ford Van			**Fuel:** **Petrol** ☒ **Diesel** ☐		
Other Specs: if required						
Description:	Ford Van					
Justification: - EXAMPLE -	For Safety Reasons, Parks and Recreation Department needs a larger (Ford Van) vehicle in order to haul equipment, Cleaning supplies required for daily operations and emergencies.					
Vehicle to be Replaced (if applicable)	**New** ☐	**Replace** ☒	**Year of Vehicle:** (in-service date) 8 years	**Mileage:** 135,000 miles	**Vehicle ID #:** 0557	**Position using Vehicle:** Parks Maintenance Technician
Type of Vehicle to be Replaced	**Make & Model:** Ford Van		**Maintenance Cost:** $15,000 /year	**Operating Costs:** $5,000	**Estimated Monthly Mileage:** 1,250 miles	
General Overall Condition - EXAMPLE -	During the last year, this vehicle has been in the fleet maintenance shop __ times. The fleet maintenance mechanic recommended that vehicle be replaced since main parts need replacement and it is not financially prudent to continue repairs on vehicle.					
	Explain what will be done with the replaced vehicle if request is approved: The old Van will be returned for reassignment to another department.					
Evaluation Score:	**1. Year:**	**2. Mileage:**	**3. Condition**	**4. Maint. Cost:**	**5. Oper. Cost**	
Approved / **Denied**	Reason:					
Priority No.:						
Proposed Item:						
Cost Estimate:			**Quantity:**			
Useful Life:						
Type of Vehicle:	**Make and Model:**			**Fuel:** **Petrol** ☐ **Diesel** ☐		
Other Specs: if required						
Description:						
Justification:						
Vehicle to be Replaced (if applicable)	**New** ☐	**Replace** ☐	**Year of Vehicle:** (in-service date)	**Mileage:**	**Vehicle ID #:**	**Position using Vehicle:**

Type of Vehicle to be Replaced	**Make & Model:**	**Maintenance Cost:**	**Operating Costs:**	**Estimated Monthly Mileage:**	
General Overall Condition					
	Explain what will be done with the replaced vehicle if request is approved:				
Evaluation Score:	**1. Year:**	**2. Mileage:**	**3. Condition**	**4. Maint. Cost:**	**5. Oper. Cost**
Approved / **Denied**	Reason:				
Priority No.:					
Proposed Item:					
Cost Estimate:		**Quantity:**			
Useful Life:					
Type of Vehicle:	**Make and Model:**	**Fuel:** Petrol ☐ Diesel ☐			
Other Specs: if required					
Description:					
Justification:					
Vehicle to be Replaced (if applicable)	**New** ☐	**Replace** ☐	**Year of Vehicle:** (in-service date)	**Mileage:**	**Vehicle ID #:**	**Position using Vehicle:**
Type of Vehicle to be Replaced	**Make & Model:**	**Maintenance Cost:**	**Operating Costs:**	**Estimated Monthly Mileage:**	
General Overall Condition					
	Explain what will be done with the replaced vehicle if request is approved:				
Evaluation Score:	**1. Year:**	**2. Mileage:**	**3. Condition**	**4. Maint. Cost:**	**5. Oper. Cost**
Approved / **Denied**	Reason:				

	Vehicle/Equipment Evaluation Criteria:
Year of Vehicle	Include "in-service date" of the vehicle.
Mileage	Include the miles of operation or meter hours
General Overall Condition	Include the condition of the body, rust, interior condition, vehicular accident status, anticipated repairs, etc.
Maintenance Cost	The maintenance figure includes all repair and maintenance costs minus any cost associated with accident repairs.
Operating Cost	Include operating cost per mile of the vehicle. Operating costs include gas, preventive maintenance, annual inspections, and accessories (i.e. washer fluid, decals, numbering, radios, strobe lights, etc.)

TL-3 & DL-3 CHASSIS SPECIFICATIONS

Basic Requirements:

1. Exterior grab handles both sides
2. Horizontal exhaust with tailpipe extended at least 6ft past cab*
3. If minimum RBM is 1,500,000 the frame rails must be a minimum thickness of 11/32" (0.3437").
4. Provision for PTO
5. Exhaust system must allow room for PTO and pump installation
6. Body builder wiring package
7. Conventional cab†

---

* In cases where vertical exhaust is used, exhaust must be mounted on side of cab with heat shields. Behind cab vertical exhaust mounting is unacceptable

† Although cab-over trucks can be used, they are not compatible with top mount style controls. 40-45 cy bodies cannot be installed on cab over style trucks

MINIMUM MEASUREMENTS

CHASSIS DIMENSIONS:

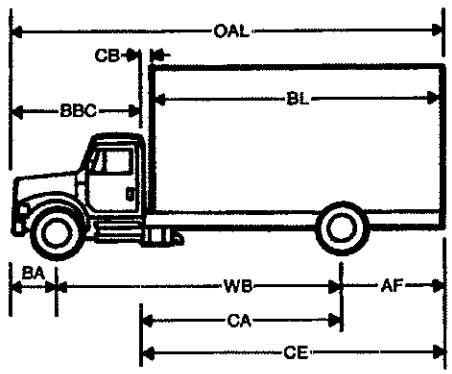

AF — Axle to End of Frame
BA — Bumper to Axle
BBC — Bumper to Back of Cab
BL — Body Length
CA — Cab to Axle
CB — Cab to Body
CE — Cab to End of Frame
FH — Frame Height
OAL — Overall Length
WB — Wheelbase

Model	RBM	GVWR	FRONT	REAR	TAG	CA	AF
1820TBS	1,500,000	33,000 lb	12 K lb	21 K lb		168"	76"
1824TBS	1,500,000	33,000 lb	12 K lb	21 K lb		168"	76"
1828TBS	1,500,000	33,000 lb	12 K lb	21 K lb		168"	76"
2026TBS	1,500,000	35,000 lb	12 K lb	23 K lb		186"	76"
2030TBS	1,500,000	37,000 lb	14 K lb	23 K lb		186"	76"
1820TBH	1,500,000	33,000 lb	12 K lb	21 K lb		168"	76"
1824TBH	1,500,000	33,000 lb	12 K lb	21 K lb		168"	76"
1828TBH	1,500,000	33,000 lb	12 K lb	21 K lb		168"	76"
2026TBH	1,500,000	35,000 lb	12 K lb	23 K lb		186"	76"
2030TBH	1,500,000	37,000 lb	14 K lb	23 K lb		186"	76"
2240TBH	2,500,000	74,000 lb	14 K lb	40 K lb	20,000 lb	172"**	120"
2245TBH	2,500,000	74,000 lb	14 K lb	40 K lb	20,000 lb	172"**	120"

**Requires tandem axle and tag axle

SPECIFICATIONS:
MODEL 1824TBS
18 FOOT, 24 CUBIC YARD TRASH DUMP BODY

(This specification is intended for use with a knuckleboom grapple loader mounted on a 168 in., c/a chassis Additional hydraulics and a different c/a needed for body only application.)

BODY FLOOR to be a single sheet of 3/16 in. smooth steel plate, 91 in. wide and 18 ft. long, continuously welded to the sides and headboard. Multiple floor panels welded together are not acceptable.

HEADBOARD to be 10 gauge smooth steel sheet, 42 in. high (measured inside from floor to top), continuously welded to the floor. Top rail to be a formed 3 in. x 4 in. 10 gauge steel.

SIDES to be of 10 gauge smooth steel sheet, front portion to be 42 in. high (measured inside from floor to top), angling to 60 in. for remainder of body and rear doors. Top of body sides to be formed with a right angle outward bend to be used as part of the top rail construction. A formed 3 in. x 4 in. 10 gauge formed channel is to be layered with this portion of the side and continuously welded to it to form the top rail. The top surface of this rail will be ¼" thick. Side construction must be smooth all the way to the bottom (No 90 degree angles on bottom of exterior body sides.)

SIDE POST to be of 3 in. x 4 in. x 10 gauge formed channel. Total of 3 on the headboard and 8 on each side on 24 in. centers, with 64 in. x 12 in. x 4 in. x 3 in. x ¼ in. formed plate corner post to prevent side flareout. The bottom of each post must be completely open to allow maximum drainage.

CROSS MEMBERS to be 4 in. structural channel on 12 in. centers.

LONGITUDINAL BEAMS to be 8 in. structural channel.

BARN DOORS to be fitted on the rear of the body with a provision to swing each door completely around to the side and latch open for dumping. Each door must have 3 hinges, with each hinge consisting of 3 steel plates, 2 ea. 5/8 in. plate welded on body, 1 ea. 3/4 in. plate welded on door, all connected with a 3/4 in. steel pin. Hinges shall not require lubrication. A positive lock shall be provided at the top and bottom for locking doors closed. Doors to be fabricated from 10 gauge material and must have an all around outside frame with one center upright post per door.

HYDRAULIC HOIST to be scissor type, dual cylinder with 16 ton capacity. Hoist must raise the body to a minimum 45 degree dump angle without the rear of the body touching ground.

LIGHTS, REFLECTORS AND MUDFLAPS must meet Federal standards. There is to be an additional set of brake lights mounted on the upper rear corner post. Clearance lights are to be flush, grommet mounted and shock resistant.

(Page 1 of 2)

Due to continuing product improvement, specifications are subject to change without notice or obligation Rev 012208 BPU

SPECIFICATIONS:
MODEL TL-3 LIGHTNING LOADER®
20 FOOT KNUCKLEBOOM GRAPPLE LOADER

INTENT

It is the intent of these specifications to describe a hydraulically operated, knuckleboom trash loader with telescopic boom to be used in the collection of oversize trash items such as discarded appliances, furniture, brush, leaves, building materials, etc. In this configuration, the loader is intended to be mounted directly behind the cab of a long wheelbase cab chassis, along with a trash dump body. This arrangement provides a complete, one man operated, turn-key system.

VEHICLE

The recommended vehicle for this application has a minimum Gross Vehicle Weight of 33,000 lbs., the cab-to-axle dimension varies depending upon body length (see body specifications), a minimum of 1,500,000 RBM frame rating, a minimum frame thickness of 11/32" and 76 in. of after frame. Cab must have exterior grab handle on both sides.

PEDESTAL ASSEMBLY

To be an open A-frame type to allow flexing under repeated load shocks. Total height not to exceed 7 ft. from mounting plate to top of pedestal/main boom connection point.

Spindle to be single piece high strength solid steel (ASTM 4140) turning in (ASTM-D4020-81) cast nylon bearings. Welded spindle/head assembly is to be stress relieved prior to installation.

Boom rotation to be accomplished by a direct drive 270 degree hydraulic rotary actuator, Model HA-36, with a maximum torque rating of 72,000 in. lbs. This rotary actuator eliminates the need for any type of gear reduction, thereby eliminating the metal-to-metal wear found in open, exposed pinion and bull gear designs. To prevent spindle bending moments from being transmitted to rotary actuator, the actuator must be mounted by means of a torque arm assembly.

Due to continuing product improvement, specifications are subject to change without notice or obligation Rev 062212 MLK

BOOM CONSTRUCTION

Main boom to be comprised of two ea., 4 in. x 8 in. x 3/8 in. thick steel tubes connected to each other only at their center line to allow a shock absorbing flexing action of the boom. Main boom hydraulic cylinder must have a minimum of 1200psi down pressure for compacting loads.

Tip boom to have an extendible/retractable telescopic section controllable from the operator's platform. Must have mechanical stops to prevent cylinder stress. The inner and outer sleeves of the telescopic section must be separated by replaceable cast nylon wear blocks on all sides to prevent metal-to-metal wear. Hydraulic hoses for the telescopic section must be enclosed in steel box for protection. No exposed tip extension hoses shall be permitted.

LIFT CAPACITY

Load radius is measured from the center of boom rotation to the center of the bucket rotation.

Capacities shown must not exceed 85% of vehicle tipping moment, with outriggers fully extended on firm, level ground. *Weight of bucket and/or attachments to boom must be subtracted from lift capacities shown.

Boom Radius	Lift Capacity
10 ft.	7,100 lbs.
16 ft.	4,400 lbs.
20 ft.	3,200 lbs.

*Standard bucket weighs approximately 1,000 lbs.

BOOM CONNECTION POINTS

Boom connection points must be equipped with replaceable cast nylon or bronze bushings and a 2 in. bolt with castellated nut to prevent spreading of the connection pivot point.

Due to continuing product improvement specifications are subject to change without notice or obligation Rev 062212 MLK

TRASH BUCKET

To be a special municipal trash bucket actuated by a single double-acting cylinder. The bucket shall be capable of continuous rotation with no need for physical stops. Bucket rotation to be accomplished by a continuous rotation bucket motor, Model RE, with 5,500 in. lbs. torque rating. Bucket must have the capability to be rolled over on the load without damage to any components. This allows a maximum load and keeps boom height within acceptable limits. Bucket must also have a minimum reach of 9 feet below grade.

The bucket must incorporate:

- 3/16 in. plate, smooth steel clamshell scoop for leaves and sand.
- End plates are to be a minimum 5\8 in. thick and of A-572 grade 50, 50,000psi steel.
- Minimum of 5 ribs per side to handle branches, logs and appliances
- Trample ram in the center for compressing trash in body.
- Replaceable bolt-on bucket blades made of high impact tempered steel

The bucket must be 4 ft. long with an opened width of 5 ft. between pickup blades. Anti-scalping bucket sides are pivot mounted to provide a horizontal closing action rather than a vertical digging motion. Sides are mechanically linked to single hydraulic cylinder to ensure both sides close and open together. No hydraulic hoses below bucket rotator.

POWER SOURCE

To be a transmission mounted power take off coupled directly to the hydraulic pump (no drive shafts).

For vehicles with an automatic transmission, the power source shall be a "Hot Shift" PTO. "Hot Shift" automatically disengages the PTO when the truck is placed in gear, and reengages when the truck is placed back in neutral (ready for hydraulic operation). This eliminates the possibility of damage to the hydraulic components that could result if the operator drives the vehicle with the PTO in gear. Also provides for smooth engagement of PTO with no gnashing or grinding of gears.

For vehicles with a manual transmission and air brakes, the power source must be an "Air Shift" PTO.

For vehicles with a manual transmission and hydraulic brakes, the power source must be a "Cable Shift" PTO.

Must be equipped with overspeed protection (with the exception of a manual transmission). Over-speeding the pump causes the hydraulic fluid to overheat. Overspeed protection prevents damage to the hydraulic system. All electrical connections are to be to chassis manufacturer's specifications.

Due to continuing product improvement, specifications are subject to change without notice or obligation Rev 062212 MLK

HYDRAULIC COMPONENTS

Reservoir:	40 gallon baffled tank with suction and return filters and cutoff valves for easy servicing. Includes a sight gauge with a thermometer and a vent filter.
Cylinders:	Double acting with chromed rods and aluminum pistons.
Main Boom:	5 in. x 32 in. with a 2 ½ in. shaft.
Tip Boom:	5 in. x 32 in. with a 2 ½ in. shaft.
Tip Extension:	2 in. x 48 in. with a 1 ¼ in. shaft.
Bucket:	4 in. x 12 in. with a 2 in. shaft
Control Valves:	Gresen stack type with port reliefs
Safety Locking Valves:	Counter balance valves to be installed on main boom, tip boom, and tip extension cylinders and pilot operated check valves on outriggers to prevent a leakdown or collapse in case of a hydraulic hose rupture.
Pump:	Single Commercial Intertech P-20
Hydraulic Lines:	JIC mechanical tubing, 12,000 PSI working pressure. High tensile steel wire braided hoses, 4000 PSI working pressure.
Pressure:	Main relief set at 2,500 PSI maximum.

ENGINE CONTROL

Engine is to be programmed for the proper RPM level and activated by a marine type switch at the operator's station.

OPERATOR CONTROLS

DUAL CONTROLS: Control platform to be located directly behind conventional cab at the same height as the top of the truck frame to allow operator access from the truck cab without ever having to touch the ground. A single bank of control valves to be mounted at the mid-point of loader, with control handles accessible from the operator platform on either side of truck. Control handle pattern must be the same on both sides of the truck for superior visibility. Control handles shall not require lubrication. A "Grip Strut" serrated steel walk platform is included.

Due to continuing product improvement, specifications are subject to change without notice or obligation Rev 062212 MLK

OUTRIGGER STABILIZERS

MODEL 3: Outriggers to be constructed with hydraulically powered telescoping rectangular tubing.

Outriggers to be equipped with large steel pads to minimize damage to street. Outriggers must telescope out and down to reach a horizontal distance of 11 ft. 8 in. between outer edges.

Horizontal stabilizer movement of each stabilizer to be powered by a hydraulic cylinder with a bore of 2 in. and a stroke of 20 in. Horizontal telescopic outrigger components to be separated by cast nylon bearings on all four sides to eliminate metal to metal contact and reduce wear.

Vertical movement to be provided by two hydraulic cylinders with a bore of 3 in. and a stroke of 22 in. These cylinders must be fully enclosed for protection, and equipped with pilot operated check valves.

PAINT

Loader must receive 1 coat of high-grade primer and 2 coats of high-grade enamel (manufacturer's standard colors). Bucket to be painted PI standard black.

MISCELLANEOUS

Includes boom up sensor with indicator light and audible alarm (light in cab with audible alarm warns the driver of excessive boom height), tail pipe extended past operator platform and back-up alarm.

One operator/service/parts manual included.

One hour training videotape for operators/mechanics included.

Current model must have been in production at least fifteen years.

WARRANTY

Three year major structural and one year hydraulic warranty for loader and body. (See Warranty Sheet**)**

Due to continuing product improvement, specifications are subject to change without notice or obligation Rev 062212 MLK

Recommended TL-3 Package
TL3-1824TBS

This is our most popular package. The configuration is as follows:

CHASSIS

Medium duty chassis with a conventional cab (Class 7). Cab to axle dimension should be 168 in. (varies with body length) with 76 in. of after frame. The frame RBM rating should be no less than 1,500,000 and a minimum frame thickness of 11/32". GVWR should be 33,000 (12K front and 21K rear). Exterior grab handles on both sides. Horizontal exhaust extended at least 6 ft. past cab. We will not knowingly mount this package on a chassis that does not meet these minimum requirements.

LOADER

TL-3 - Although numerous options are available, the most important will be the selection of your actuator (boom swing motor). Our standard is the HA-36 (max. torque rating of 72,000 in.lbs.). This motor will serve the customer well unless the terrain is hilly or mountainous. In these areas it will be necessary to add the option of our SAI hydraulic motor (max. torque rating of 150,000 in. lbs.).

BODY

1824TBS - This is our 18 ft. 24 cu.yd. body. This unit has a 16 ton dump hoist as standard. There are numerous options available for this body, including some inexpensive options, which could noticeably increase the life span. See your price list for options.

Due to continuing product improvement specifications are subject to change without notice or obligation Rev 090412 JAC

OPTIONAL EQUIPMENT
MODEL TL-3 LIGHTNING LOADER®

PEDESTAL ASSEMBLY

Hydraulic Motor:

Model SAI 1250/150: Boom rotation to be accomplished by a direct drive 270 degree planetary gearbox with radial piston hydraulic motor. Model SAI 1250/150, with a maximum torque rating of 150,000 in. lbs. This enclosed gearbox must be 100% oil bath which eliminates the lubrication labor and the metal-to-metal wear found in open, exposed pinion and bull gear designs. To prevent spindle bending moments from being transmitted to enclosed gearbox, the gearbox must be mounted by means of a torque arm assembly.

OPERATOR CONTROLS:

Top-Mount: Operator station is located on a stationary platform above the truck cab. The control valves are mounted under the seat, with the control handles between the operator's legs for easy access. A ladder, safety railing, padded seat with arm rests and seat belt are provided. Please note that if top mount controls are selected, your rotation is limited to 195 degrees.
Optional: Foot pedal to control boom swing

Joystick (dual walk-thru): Petersen mechanical QUADSTICK® controls. Each of the four joysticks has six functions to control loader operation. Outriggers are controlled by two joysticks at the center of the operator platform. Body dump is controlled by a single lever at the center of the operator platform.

Joystick (top mount): Two mechanical six function joysticks located on either side of the operator seat control loader operation. Outrigger and body dump controls are located to the left of the operator seat.

MISCELLANEOUS

Outrigger Warning Light and Audible Alarm: Dash mounted red light remains lit and audible alarm sounds until the outriggers are fully raised.

Dual Top Strobe: Dual strobe lights mounted in a single housing.

Rubber Street Pads: Mounted on outrigger feet.

Outrigger Strobes: Mount one on top of each outrigger.

Reflective Tape: Applied to outrigger legs.

Paint Bucket: Colors other than black

(Page 1 of 1)
Due to continuing product improvement, specifications are subject to change without notice or obligation Rev 062212 MLK

Steve Moore

From: Sam Petersen <spetersen@petersenind.com>
Sent: Thursday, May 09, 2013 5:33 PM
To: Steve Moore
Subject: Lightning Loader Budget Quote
Attachments: deltona fl pi direct njpa tl3 1824tbs m2 106 050913 pdf; 1824TBS.pdf; TL-3 Specs.pdf; Petersen Industries 2014 TL3 020131 pdf

Steve,

Attached is the quote and general specs for this unit. Please make note of our NJPA contract number in the upper right corner. This needs to be on all purchasing information so that there is a clear paper trail from quote to order to invoice. The following link is for our page on NJPA's website. It has all the information that the purchasing department should need as well as the contact information for our NJPA contract manager, Jeremy Schwartz.

http://www.njpacoop.org/contract-purchasing-solutions/contracts/contract-details?itemplate=details&pageId=41&lcommtypeid=10&item_id=687&category=&subcategory

Feel free to call with any questions.

Thanks,

Samuel S. Petersen
V/P Sales & Marketing
Petersen Industries, Inc.
Office: 863-676-1493 Ext 256
Cell: 863-287-1673
Fax: 863-676-6844
Email: spetersen@petersenind.com

********** NOTICE **********

This e-mail, including any attachments, is intended only for the receipt and use by the addressee(s) listed above and may contain privileged, confidential, work product and/or trade secrets or other information of a proprietary and confidential nature. If you are not an intended recipient of this e-mail, you are respectfully requested to inform the sender of your unintended receipt and are hereby notified that any unauthorized use or distribution of this e-mail, including any attachment, is strictly prohibited.

AGENDA MEMO

TO: Mayor & City Commission **AGENDA DATE:** 10/21/2013

FROM: William D. Denny, Acting City Manager **AGENDA ITEM:** 10 - A

SUBJECT: Request for approval of budget amendment to cover the cost of the Emergency Generator for Fire Station 64.

LOCATION:	Fire Station 64
BACKGROUND:	A budget amendment of $30,930.50 is requested to cover the cost of the Emergency Generator for Fire Station 64. Originally, funds were budgeted in the 2012/2013 Fiscal Year. The manufacturer of the generator, Catepilllar will not be able to deliver the generator until early December 2013. This is a transfer of funds from FY 2012/2013 to FY 2013/2014. There is no increase in cost for this request.
ORIGINATING DEPARTMENT:	Fire Administration
SOURCE OF FUNDS:	Capital Equipment Replacement Fund
COST:	30,930.50
REVIEWED BY:	Finance Director, City Attorney
STAFF RECOMMENDATION PRESENTED BY:	Robert Staples, Fire Chief - Recommendation is being made to approve a budget amendment to cover the cost of the Emergency Generator for Fire Station 64 at a cost not to exceed $30,930.50.
POTENTIAL MOTION:	"I move to approve a budget amendment to cover the cost to replace the Emergency Generator at Fire Station 64 at a cost not to exceed $30,930.50."
AGENDA ITEM APPROVED BY:	_____

	William D. Denny, Acting City Manager
ATTACHMENTS:	• Budget Amendment Form • Proposal from Ring Power • Generator Specifications • Contract

City of Deltona

Budget Amendment

Amendment #: 2014-01 Date: October 21, 2013

Fund: Capital Equip Replacement Agenda Item:

			Increase	Decrease
Account #:	501 640500	Amount:	30,930	
Description:	E/Q & MACHINERY			
Account #:		Amount:		
Description:				
Account #:		Amount:		
Description:				
Account #:		Amount:		
Description:				
Account #:		Amount:		
Description:				
Account #:		Amount:		
Description:				
Account #:		Amount:		
Description:				
Account #:		Amount:		
Description:				
Account #:		Amount:		
Description:				
Account #:		Amount:		
Description:				

Description: This amendment results in a net decrease in Budgetary Fund Balance of $30,930.

Reason: **Purchase replacement emergency generator at Fire Station 64.**

ATTEST:

John C. Masiarczyk, Sr., Mayor

Joyce Raftery, City Clerk

Ring Power CAT

OLYMPIAN™ GENERATORS

CAT Power Systems

Your North and Central Florida Caterpillar Dealer

ST. AUGUSTINE	TALLAHASSEE	OCALA	ORLANDO	TAMPA
500 World Commerce Prkwy	4752 Capital Circle NW	6202 N US 301/441	9901 Ringhaver Dr.	9797 Gibsonton Dr
St. Augustine, FL 32092	Tallahassee, FL 32303	Ocala, FL 34475	Orlando, FL 32824	Riverview, FL 33569
904-737-7730	**850-562-1622**	**352-732-4600**	**407-855-6195**	**813-671-3700**

SALES ***SERVICE*** ***PARTS*** ***LEASING*** ***RENTALS***

QUOTATION / SALES AGREEMENT / SECURITY AGREEMENT

DATE: 6/13/13

QUOTATION NO: JB13049

CUSTOMER NAME: City of Deltona
ADDRESS: 2345 Providence Blvd.
CITY/STATE/ZIP: Deltona, FL 32725
CONTACT: Kate Krauss
PHONE: (386) 878-8570

ESTIMATED SHIPPING LEAD TIME: **18 weeks after approved submittal**
SHIPPING VIA/FOB: Jobsite
ESTIMATED SUBMITTAL LEAD TIME: **3-4 weeks**
JOBSITE ADDRESS: 236 Port Smith Blvd.
CITY/STATE/ZIP: Deltona FL
PROJECT NAME: City of Deltona Fire Station 60kW

TERMS: *Full payment is due from buyer within 10 days of delivery or pickup of the equipment.*

DESCRIPTION OF MATERIAL	UNIT PRICE	EXTENSION
Please ensure quote meets your expectations. One (1) New Caterpillar Diesel Generator – Next Gen Compact Model D60-8S (Lean), Rated 60 kw standby at 0.8 PF, 120/240 Volts, Single Phase, 4 Wire, 60 Hz at 1800 RPM, with following options: • UL Listed 2200 Packaged Genset , NFPA 110 upgrade • Main UL 250 Amp circuit breaker, shunt trip generator mounted, Aux Contact Included • CAT EMCP 4.2 Control panel with safety shutdowns, Engine controls and gauges • Voltage regulator • Anti-Condensation Heater • Alternator Upgrade • ADEM Governor		

Quotation Accepted By: _____ Date: _____ Tax No.: _____

Customer: _____ Salesman's Signature: *Jake Bechtol*

Jake Bechtol, EPG & Industrial Engine Sales.

TERMS

- This offer to sell is made subject to buyer's acceptance within ten (10) days from this date (noted above).
- All quoted prices are subject to change without notice. Those in effect on the date of shipment shall prevail.
- Subject to credit approval.
- Used equipment is subject to prior sale.
- A 25% restocking fee will be assessed for all canceled orders or returned materials.
- No retainage to be withheld. Ring Power Systems is an equipment supplier and is not a sub-contractor. Our terms are Net 10 days.
- No sales tax is included.
- Buyer grants to seller a security interest in all equipment as described in this agreement until such time as payment is made in full in accordance with the terms and conditions of this agreement and in accord with the seller's credit application.
- Ring Power requires a purchase order to secure this sales agreement.

.

DESCRIPTION OF MATERIAL	UNIT PRICE	EXTENSION
• PMG excitation		
• Jacket water heater, 120VAC input		
• Battery charger UL 10 amp, 120 VAC input		
• Batteries with Rack and Cables		
• CAT Standard 2 Year 1000 hour limited Warranty		
• Caterpillar Factory Steel Enclosure with Sound Attenuation		
Total LIST Price for Above for CAT Items		**$ 30,855.00**
NJPA DISCOUNT – 30% off of List Price		($9,256.50)
CAT Genset Price with NJPA Discount		**$21,598.50**
CAT DEALER ADDITIONS – All receive 5% off List Price per NJPA		
• Freight		$2,350.00
• Startup, 4 hour load test and Instruction to Personnel		$1,750.00
• 72 Hour Sub-Base Fuel tank Provided by Phoenix Products		$5,232.00
TOTAL NET PRICE PER NJPA CONSORTIUM CONTRACT# 092409		**$30,930.50**

Exceptions:

NOTE:

1. The above price includes start-up, testing, and customer training (during normal business hours, Monday-Friday, 8 AM - 4PM). Equipment installation must complete and equipment ready to start-up.
2. No installation (including shipped loose accessories), labor, conduit, wire, equipment off loading, anchor bolts, pad, fuel or fuel piping is included
3. No sales tax included
4. Proposal is based on information supplied by the Customer.
5. No specifications, drawings, or diagrams were received or reviewed. General exception is taken to any other specifications and drawings not available at time of quotation. Equipment supplied will be limited to that described in this proposal.
6. Ring Power will be supplying equipment as described in the attached documentation.
7. No equipment will be ordered without an approved Purchase Order.
8. Equipment shipped will be invoiced for at the time of delivery.
9. **Ring Power will not release equipment for production until we have received the signed sales agreement and signed and approved submittal from our customer. This is done to insure that we are providing quality equipment that fits our customer's needs.** If you need any assistance, please contact your sales representative.

Thank you for considering Ring Power Systems for your generator needs

Jake Bechtol

Jake Bechtol

Ring Power Corporation
Electric Power Generation & industrial Engine Sales
(407) 472-6242 Office – (407) 438-0922 Fax - (321) 288-1242 Cell
jake.bechtol@ringpower.com

DIESEL GENERATOR SET

Image shown may not reflect actual package.

STANDBY
60 ekW 60 kVA

PRIME
55 ekW 55 kVA

60 Hz 1800 rpm 240/120 Volts

Caterpillar is leading the power generation marketplace with Power Solutions engineered to deliver unmatched flexibility, expandability, reliability, and cost-effectiveness.

FEATURES

FUEL/EMISSIONS STRATEGY

- EPA Certified for Stationary Emergency Application (EPA Tier 3 emissions levels)

FULL RANGE OF ATTACHMENTS

- Wide range of bolt-on system expansion attachments, factory designed and tested
- Flexible packaging options for easy and cost effective installation

SINGLE-SOURCE SUPPLIER

- Fully prototype tested with certified torsional vibration analysis available

WORLDWIDE PRODUCT SUPPORT

- Cat dealers provide extensive post sale support including maintenance and repair agreements
- Cat dealers have over 1,800 dealer branch stores operating in 200 countries
- The Cat S•O•S℠ program cost effectively detects internal engine component condition, even the presence of unwanted fluids and combustion by-products

Cat® Model D60-8S, Single Phase

CAT C4.4 DIESEL ENGINE

- Reliable, rugged, durable design
- Field-proven in thousands of applications worldwide
- Four-stroke diesel engine combines consistent performance and excellent fuel economy with minimum weight
- Electronic engine control

GENERATOR SET

- Complete system designed and built at ISO 9001 certified facilities
- Factory tested to design specifications at full load conditions

CAT EMCP 4 CONTROL PANELS

- Simple user friendly interface and navigation
- Scalable system to meet a wide range ofcustomer needs
- Integrated Control System and Communications Gateway

SEISMIC CERTIFICATION

- Seismic Certification available
- Anchoring details are site specific, and are dependent on many factors such as generator set size, weight, and concrete strength.
  IBC Certification requires that the anchoring system used is reviewed and approved by a Professional Engineer
- Seismic Certification per Applicable Building codes:
  IBC 2000, IBC 2003, IBC 2006, IBC 2009, IBC 2012
  CBC 2007, CBC 2010
- Pre-approved by OSHPD and carries an OSP-0321-10 for use in healthcare projects in California

STANDBY 60 ekW 60 kVA
PRIME 55 ekW 55 kVA
60 Hz 1800 rpm 240/120 Volts

FACTORY INSTALLED STANDARD & OPTIONAL EQUIPMENT

System	Standard	Optional
Air Inlet	• Dry replaceable paper element type with restriction indicator	
Cooling	• Radiator and cooling fan complete with protective guards • Standard ambient temperatures up to 50°C (122°F)	[ ] Radiator stone guard [ ] Radiator transition flange
Exhaust		[ ] Industrial [ ] Residential [ ] Critical mufflers [ ] Overhead silencer mounting kit
Fuel	• Flexible fuel lines to base with NPT connections	[ ] Sub-base dual wall UL listed 24 hr fuel tank [ ] Sub-base dual wall UL listed 48 hr fuel tank [ ] Emergency vent 12ft extension [ ] 5 gallon spill containment
Generator	• Class H insulation • Drip proof generator air intake (NEMA 2,IP23) • Electrical design in accordance with with BS5000 Part 99, EN61000-6, IEC60034-1, NEMA MG-1.33 • IP23 Protection	[ ] Generator upgrade 1 size [ ] Permanent magnet excitation [ ] Internal excitation [ ] Anti-condensation space heater
Power Termination	• Circuit breakers, UL/CSA listed, 3 pole (100% rated) • Power center houses EMCP controller and control terminations (CB) • Segregated low voltage wiring termination panel • NEMA 1 steel enclosure, vibration isolated • Electrical stub-up area directly below circuit breaker	[ ] Auxiliary contacts [ ] Shunt trip [ ] Overload shutdown via breaker
Governor	• ADEM™A4	
Control Panels	• EMCP 4.2 digital control panel • Vibration isolated NEMA 1 enclosure with lockable hinged door • DC and AC Wiring harnesses	[ ] NFPA110 upgrade [ ] Control panel chassis
Lube		[ ] Lube oil heater
Mounting	• Heavy-duty fabricated steel base with lifting points • Anti-vibration pads to ensure vibration isolation • Complete OSHA guarding • Stub-up pipe ready for connection to silencer pipework	[ ] IBC Seismic and OSHPD certification per Applicable Building Codes: IBC2000, IBC2003, IBC2006, IBC 2009, IBC 2012, CBC 2007, CBC 2010
Starting/Charging	• 12 volt starting motor • Batteries with rack and cables	[ ] Battery charger – UL 10 amp [ ] Battery disconnect switch [ ] Battery removal (does not remove rack and cables) [ ] Coolant Heater
General	• High gloss polyurethane paint, Caterpillar Yellow except rails and radiators gloss black • Anticorrosive paint protection • All electroplated hardware	[ ] CSA Certified [ ] Weather protective enclosure Industrial/Critical [ ] Sound attenuated protective enclosure [ ] Caterpillar tool set [ ] Caterpillar White paint

STANDBY 60 ekW 60 kVA
PRIME 55 ekW 55 kVA
60 Hz 1800 rpm 240/120 Volts

SPECIFICATIONS

STANDARD CAT GENERATOR	
Frame size	LCB2014H
Excitation	Self excitation
Pitch	0.6667
Number of poles	4
Number of bearings	Single bearing
Number of leads	4
Insulation	Class H
IP Rating	IP23
Overspeed capability (%)	125
Wave form deviation (%)	2
Voltage regulation	+/- 1.0% (steady state)
CAT DIESEL ENGINE	
C4.4 In-line 4, 4-cycle diesel	
Bore	105.0 mm (4,13 in)
Stroke	127.0 mm (5.0 in)
Displacement	4.4 L (268.5 in^3)
Compression ratio	16.2:1
Aspiration	T
Fuel system	Common rail
Governor type	Electronic
EMISSIONS (Nominal[1])	
NOx + HC g/kWhr	4.33
CO g/kWhr	1.15
PM g/kWhr	0.18

[1]The nominal emissions data shown is subject to instrumentation, measurement, facility and engine to engne variations. Emissions data is based on 100% load.

CAT EMCP 4 SERIES CONTROLS

EMCP 4 controls including:
- Run / Auto / Stop Control
- Speed and Voltage Adjust
- Engine Cycle Crank
- 12 volt DC operation
- Environmental sealed front face
- Text alarm/event descriptions

Digital indication for:
- RPM
- DC volts
- Operating hours
- Oil pressure (psi, kPa or bar)
- Coolant temperature
- Volts (L-L & L-N), frequency (Hz)
- Amps (per phase & average)
- ekW, kVA, kVAR, kW-hr, %kW, PF

Warning/shutdown with common LED indication of:
- Low oil pressure
- High coolant temperature
- Overspeed
- Emergency stop
- Failure to start (overcrank)
- Low coolant temperature
- Low coolant level

Programmable protective relaying functions:
- Generator phase sequence
- Over/Under voltage (27/59)
- Over/Under frequency (81 o/u)
- Reverse power (kW) (32)
- Reverse reactive power (kVAr) (32RV)
- Overcurrent (50/51)

Communications:
- Six digital inputs
- Four relay outputs (Form A)
- Two relay outputs (Form C)
- Two digital outputs
- Customer data link (Modbus RTU)
- Accessory module data link
- Serial annunciator module data link
- Emergency stop pushbutton

Compatible with the following:
- Digital I/O module
- Local annunciator
- Remote CAN annunciator
- Remote serial annunciator

STANDBY 60 ekW 60 kVA
PRIME 55 ekW 55 kVA
60 Hz 1800 rpm 240/120 Volts

TECHNICAL DATA

Open Generator Set – 1800 rpm/60 Hz/480 Volts	P3468A		P3468B	
Tier 3	**STANDBY**		**PRIME**	
Generator Set Package Performance				
Genset power rating @ 0.8 pf	60.0 kVA		55.0 kVA	
Genset power rating with fan	60.0 ekW		55.0 ekW	
Fuel Consumption				
100% load with fan	19.5 L/hr	5.2 gal/hr	18.7 L/hr	4.9 gal/hr
75% load with fan	16.7 L/hr	4.4 gal/hr	15.8 L/hr	4.2 gal/hr
50% load with fan	12.8 L/hr	3.4 gal/hr	12.0 L/hr	3.2 gal/hr
Cooling System[1]				
Air flow restriction (system)	0.12 kPa	0.48 in. water	0.12 kPa	0.48 in. water
Engine coolant capacity with radiator/exp. tank	16.5 L	4.4 gal	16.5 L	4.4 gal
Engine coolant capacity	9.5 L	2.5 gal	9.5 L	2.5 gal
Radiator coolant capacity	7.0 L	1.8 gal	7.0 L	1.8 gal
Inlet Air				
Combustion air inlet flow rate	5.9 m³/min	208.4 cfm	5.9 m³/min	208.4 cfm
Exhaust System				
Exhaust stack gas temperature	547.0°C	1017 °F	525.0°C	977 °F
Exhaust gas flow rate	14.7 m³/min	519 cfm	14.4 m³/min	509 cfm
Exhaust flange size (internal diameter)	63.5 mm	2.5 in	63.5 mm	2.5 in
Exhaust system back pressure	15 kPa	60.2 in. water	15 kPa	60.2 in. water
Heat Rejection				
Heat rejection to coolant (total)	49.6 kW	2821 Btu/min	46.7 kW	2656 Btu/min
Heat rejection to exhaust (total)	66.9 kW	3805 Btu/min	65.9 kW	3742 Btu/min
Heat rejection to atmosphere from engine	14.9 kW	847.3 Btu/min	10.8 kW	614.2 Btu/min
Heat rejection to atmosphere from generator	6.1 kW	346.9 Btu/min	5.4 kW	307.1 Btu/min
Alternator[2]				
Motor starting capability @ 30% voltage dip	163 skV		163 skV	
Frame	LC2014HF		LC2014HF	
Temperature rise	105°C	189°F	105°C	189°F
Lubrication System				
Total oil capacity	8.4 L	2.2 gal	8.4 L	2.2 gal
Oil pan	6.9 L	1.8 gal	6.9 L	1.8 gal

[1]For ambient and altitude capabilities consult your Cat dealer. Airflow restriction (system) is added to existing restriction from factory.
[2]Generator temperature rise is based on a 40°C (104°F) ambient per NEMA MG1-32.

STANDBY 60 ekW 60 kVA
PRIME 55 ekW 55 kVA
60 Hz 1800 rpm 240/120 Volts

RATING DEFINITIONS AND CONDITIONS

Applicable Codes and Standards: AS1359, CSA C22.2 No 100-04, UL142, UL489, UL601, UL869, UL2200, NFPA 37, NFPA 70, NFPA 99, NFPA 110, IBC, IEC60034-1, ISO3046, ISO8528, NEMA MG 1-22, NEMA MG 1-33, 72/23/EEC, 98/37/EC, 2004/108/EC.

Standby – Output available with varying load for the duration of the interruption of the normal source power. Average power output is 70% of the standby power rating. Typical operation is 200 hours per year, with maximum expected usage of 500 hours per year.

Prime – Output available with varying load for an unlimited time. Average power output is 70% of the prime power rating. Typical peak demand of 100% of prime-rated eKW with 10% of overload capability for emergency use for a maximum of 1 hour in 12. Overload operation cannot exceed 25 hours per year.

Ratings are based on SAE J1349 standard conditions. These ratings also apply at ISO3046 standard conditions.

Fuel rates are based on fuel oil to specification EPA 2D 89.330-96 with a density of 0.845 – 0.850 kg/L (7.052 – 7.094 lbs/U.S. gal.) @ 15°C (59°F) and fuel inlet temperature 40°C (104°F). Additional ratings may be available for specific customer requirements, contact your Cat representative for details. For information regarding Low Sulfur fuel and Biodiesel capability, please consult your Cat dealer.

STANDBY 60 ekW 60 kVA
PRIME 55 ekW 55 kVA
60 Hz 1800 rpm 240/120 Volts

DIMENSIONS

Package Dimensions		
Length	1932 mm	76 in
Width	1110 mm	44 in
Height	1767 mm	46 in

NOTE: For reference only – do not use for installation design. Please contact your local dealer for exact weight and dimensions. (General Dimension Drawing #3989305).

Performance No.: P3468A/B

Feature Code: NAC141P

Gen. Arr. Number: 3932521

Source: U.S. Sourced

LEHE0428-01 (04/13)

www.Cat-ElectricPower.com

2013 Caterpillar
All rights reserved.

Materials and specifications are subject to change without notice. The International System of Units (SI) is used in this publication.

CAT, CATERPILLAR, their respective logos, "Caterpillar Yellow," the "Power Edge" trade dress, as well as corporate and product identity used herein, are trademarks of Caterpillar and may not be used without permission.

Back To Contract Index

NJPA AWARDED CONTRACT

CATERPILLAR®

Heavy Construction Equipment

Caterpillar, Inc. - #060311-CAT

Caterpillar has grown to be the largest manufacturer of construction and mining equipment, diesel and natural gas engines, and industrial gas turbines in the world. Team Caterpillar is proud to be providing our products to the NJPA membership by way of contract #060311.

Through Caterpillar's extensive dealer network, NJPA members will be able to select from over 120 models spanning from 14 product families. In addition to the breath of products, Caterpillar's dealer network will deliver the exceptional service and support our customers have grown to expect.

Find a CAT Dealer

Contact

Jason Walker
Office: 309-675-4095
Walker_Jason_C@cat.com
www.govbidspec.com

NJPA Contract Manager: Jeremy Schwartz
Direct Phone: 218-894-5488
Email

CAT Heavy Equipment - Contract Summary

Marketing Documents

Caterpillar, Inc. Customer Flyer
Caterpillar Sustainability Report

Contract Documentation (#060311-CAT)

Request for Proposal (RFP)
Bidders Response
Bid Acceptance & Award

Documentation of Competitive Bidding Process

Affidavit of Advertisement
Bid Opening Witness Page
Bid Evaluation
Bid Comment & Review
Board Minutes 7-19-11

Documentation of Contract Maintenance

Renewal Extension 10/19/12

Back To Contract Index

About NJPA
Our Board
Careers
NJPA Staff
Contact Us
Become a Vendor

Contract Purchasing
Search Contracts
Legal Authority
Procurement Process
Contract FAQs

Regional Programs
Region 5 Members
Academic Programs
Student Recognition
Early Childhood Center
Low Incidence
Health & Safety
Shared Services
Rebates

NJPA News
News RSS Feed
NJPA Newsletter
Newsletter Request

Member Benefits
Become A Member
Contact NJPA

888-894-1680 | info@njpacoop.org | 202 12th Street NE P.O. Box 219 Staples MN 56479
© Copyright 2012 National Joint Powers Alliance | Minnesota Web Design

United States / Canada [change] Find A Dealer Contact

CAT

Search

HOME | PRODUCTS | APPLICATIONS | PARTS & SERVICE | RENTAL | NEWS & EVENTS | ABOUT THE COMPANY

Find A Dealer

English

FIND A DEALER

Need help finding a Cat dealer near you? To use the Cat dealer locator below, simply enter your address and select the type of equipment you're looking for. Or, if you already know the name of the dealer you're searching for, you can type in the dealer's name for a list of locations.

Your Location

Print

Dealer Name

Address, City State or Postal Code

32725

Country

usa

>> For longitude and latitude search

Show this type of location

Sales | Parts & Services | Rental

For this type of Equipment

- Machines
- Electric Power
- Industrial and Rail Engines
- Oil & Gas
- Marine Engines
- Vocational Trucks
- On-Highway Truck Engines

Find Locations

Highlighted Locations Represent Home Dealer for Your Area

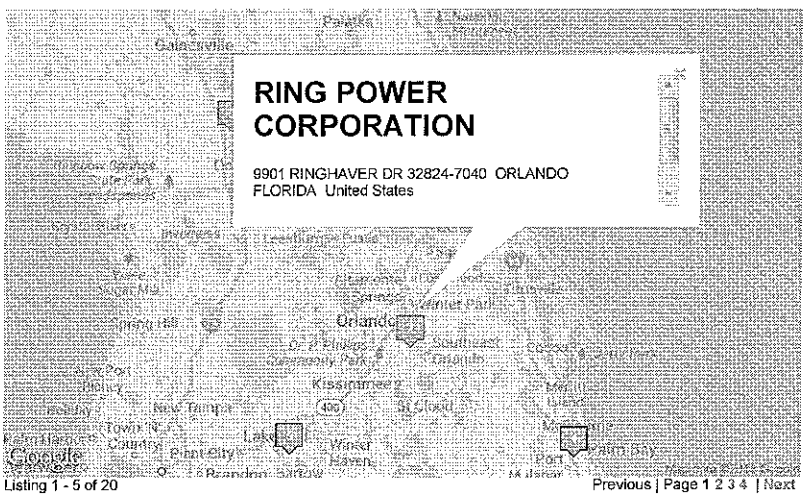

Listing 1 - 5 of 20

Previous | Page 1 2 3 4 | Next

If the location result is not correct please search again with more information

Location	Dealership	Services Offered
1 21 5 Miles 34 4 Kilometers Driving directions	RING POWER CORPORATION 401 N TOMOKA FARMS RD DAYTONA BEACH FLORIDA 32124-1067 3126 3306 C-10 3406 3116 C-12 3176 Phone numbers: 1 386 947-3363 GENERAL INFO 1 386 947-4990 GENERAL INFO (FAX) SERVICE STORE HOURS: MONDAY 0730-2300, TUESDAY 0730-2300, WEDNESDAY 0730-2300 THURSDAY 0730-2300 FRIDAY 0730-2300 E-Mails: information@ringpower com GENERAL INFO Web: http://www.ringpower.com	Truck Engine Svc Machine Sls/Svc Marine Engine Sls/Svc Power Systems Dist
2 33 Miles 52 8 Kilometers Driving directions	RING POWER CORPORATION 9901 RINGHAVER DR ORLANDO FLORIDA 32824-7040 C-10 C-12 3306 3208 3116 3408 3176 3406 Phone numbers: 1 407 855-6195 GENERAL INFO 1 407 438-0922 SERVICE (FAX) 1 407 857-1592 FAX-1 (FAX) SERVICE STORE HOURS: MONDAY 0730-2000, TUESDAY 0730-2000, WEDNESDAY 0730-2000 THURSDAY 0730-2000 FRIDAY 0730-2000 E-Mails: information@ringpower com GENERAL INFO Web: http://www.ringpower.com	Truck Engine Sls/Svc Machine Sls/Svc Marine Engine Sls/Svc On-Highway Truck Sales On-Highway Truck Product Support Power Systems Dist
	RING POWER CORPORATION 6200 N US HIGHWAY 441	

OCALA FLORIDA 34475-1592

3

60.6 Miles
96.9 Kilometers
Driving directions

Phone numbers:
1 352 732-2800 GENERAL INFO
1 352 732-4536 GENERAL INFO (FAX)

E-Mails:
information@ringpower.com GENERAL INFO

Web: http://www.ringpower.com
RING POWER CORPORATION
415 COMMUNITY COLLEGE PKWY SE
PALM BAY FLORIDA 32909-2210

3408 3208 3406 C-10 3116 3306 C-12 3176

Truck Engine Svc
07 ACERT Approved
Machine Sls/Svc

4

72.5 Miles
116.0 Kilometers
Driving directions

Phone numbers:
1 321 952-3001 GENERAL INFO
1 321 952-3007 GENERAL INFO (FAX)

SERVICE STORE HOURS:
MONDAY 0800-2300, TUESDAY 0800-2300, WEDNESDAY 0800-2300, THURSDAY 0800-2300 FRIDAY 0800-2300 SATURDAY 0700-1200

E-Mails:
information@ringpower.com GENERAL INFO

Web: http://www.ringpower.com
RING POWER CORPORATION
3425 REYNOLDS RD
LAKELAND FLORIDA 33803-8331

Truck Engine Svc
Machine Sls/Svc
Marine Engine Sls/Svc
On-Highway Truck Sales
On-Highway Truck Product Support
Power Systems Dist

5

72.9 Miles
116.7 Kilometers
Driving directions

Phone numbers:
1 863 606-0512 GENERAL INFO
1 863 606-0514 GENERAL INFO (FAX)

E-Mails:
information@ringpower.com GENERAL INFO

Web: http://www.ringpower.com

Machine Sls/Svc
On-Highway Truck Sales
On-Highway Truck Product Support
Machine Rental

Cat Products & Services
The Cat equipment product line, consists of more than 300 products for the construction and mining equipment, diesel and natural gas engines, industrial gas turbines, and has a wide offering of related services.

Products
» Attachments
» Machines
» Engines
» Generators
» Merchandise
» Used Equipment
» Technology
» Machine Comparison

Support
» Dealer Locator
» Forums
» Parts
» Financing
» Maintenance
» Training
» Safety
» Warranty
» FAQs

Cat News & Events
» Trade Press Releases
» News Feeds
» Events

About Caterpillar Inc.
Caterpillar is the world's leading manufacturer of construction and mining equipment, diesel and natural gas engines, industrial gas turbines and diesel-electric locomotives.
Learn more about:
- Company
- Brands
- Sustainability
- Innovation
- News
- Investors
- Visitors Center
- Careers

Visit Caterpillar.com

Social Media © Caterpillar All Rights Reserved Legal Notices Site Map Print Version Contact

ANNUAL RENEWAL OF AGREEMENT

made by and between

Caterpillar, Inc. (Vendor)
100 NE Adams Street
Peoria, IL 61629
and

National Joint Powers Alliance® (NJPA)
f/k/a North Central Service Cooperative (NCSC)
200 First Street NE
Staples, Minnesota 56479
Phone: (218) 894-5482 Fax: (218) 894-5495

Whereas:

"Vendor" and "NJPA" have entered into 1) an "Acceptance of Bid and IFB Award #092409-CAT", and 2) with an effective date of October 7, 2009, a maturity date of October 7, 2013, and which are subject to annual renewals at the option of both parties.

Now therefore:

"Vendor" and "NJPA" hereby desire and agree to extend and renew the above defined contracts for the period of October 7, 2011 through October 7, 2012.

National Joint Powers Alliance®(NJPA) f/k/a North Central Service Cooperative (NCSC)

By: _____, Its: Executive Director

Name printed or typed: Todd Lysco

Date 10/25/11

Caterpillar, Inc.

By: _____, Its: WEST REGION MANAGER

Name printed or typed: Neil McDougall

Date October 24, 2011

If you do not want to extend contract, please sign below and return this agreement.
Discontinue: We desire to discontinue the contract.

Signature: _____ Date: _____

AGENDA MEMO

TO: Mayor & City Commission **AGENDA DATE:** 10/21/2013

FROM: William D. Denny, Acting City Manager **AGENDA ITEM:** 10 - B

SUBJECT: Request for approval of budget amendment for Sidewalk Funds.

LOCATION: N/A

BACKGROUND:

A Budget Amendment of $6,158.00 is requested to cover the difference between the actual construction costs of the Acadian Sidewalk project ($48,323.00) and the amount being funded by the FDOT LAP agreement ($42,165.00).

Additionally, a Budget Amendment of $106,161.00 is being requested to reappropriate unexpended funds from the previous FY12/13. These funds will be used in the City's Sidewalk Prioritization Plan for the construction of sidewalks along roadways with pedestrian traffic en route to elementary and middle schools in the current FY13/14.

These two Budget Amendments will result in a net decrease in Budgetary Fund Balance of $112,319.00.

ORIGINATING DEPARTMENT: Finance

SOURCE OF FUNDS: Sidewalk and Bike Paths

COST: $112,319.00

REVIEWED BY: Public Works Director, Finance Director

STAFF RECOMMENDATION PRESENTED BY:

Gerald Chancellor, Public Works Director - That the City Commission approve the budget amendment in the amount of $112,319.00 to cover the difference in the cost of the Acadian Sidewalk Construction project not covered by the FDOT LAP agreement ($6,158.00) and the costs associated with the City wide sidewalks designated within the

Sidewalk Prioritization Plan.

POTENTIAL MOTION:

"I move to approve the budget amendment in the amount of $112,319.00 to pay for the difference in the cost of the Acadian Sidewalk Construction project not covered by the FDOT LAP agreement ($6,158.00) and the costs associated with the City wide sidewalks designated within the Sidewalk Prioritization Plan.."

AGENDA ITEM APPROVED BY:

William D. Denny, Acting City Manager

ATTACHMENTS:

- Budget Amendment and breakdown

City of Deltona

Budget Amendment

Fiscal Year 2013-2014

Amendment #: 2014-02 Date: October 21, 2013

Fund: 001-General Fund Agenda Item:

			Increase	Decrease
Account #:	001414 631001	Amount:	106,161	
Description:	SIDEWALKS & BIKE PATHS			
Account #:	001414 631001	Amount:	48,323	-
Description:	SIDEWALKS & BIKE PATHS			
Account #:	001 331201	Amount:	42,165	-
Description:	FEDERAL GRANT-TRANSPORTATIOIN			
Account #:		Amount:		
Description:				
Account #:		Amount:		
Description:				
Account #:		Amount:		
Description:				
Account #:		Amount:		
Description:				
Account #:		Amount:		
Description:				
Account #:		Amount:		
Description:				
Account #:		Amount:		
Description:				

Description: This amendment results in a net decrease in Budgetary Fund Balance of $112,319.

Reason: **City wide sidewalks and LAP project (Acadian sidewalk)**

ATTEST:

John C. Masiarczyk, Sr., Mayor

Joyce Raftery, City Clerk

Item 10B

192

Proposed Budget Amendment Explanation

Budgeted Cost FY 12/13	$613,000.00
Budgeted LAP Revenue FY 12/13	($45,000.00)
Net Amount to Spend FY 12/13	$568,000.00
Spent FY 12/13	$455,681.00
Available at year end FY 12/13	$112,319.00
LAP Revenue FY 13/14	($42,165.00)
Acadian Sidewalk Construction Cost	$48,323.00
City wide sidewalks FY 13/14	$106,161.00
Budget Amendment FY 13/14	$112,319.00
Difference between Available at year end FY 12/13 and Budget Amendment FY 13/14	$0.00

AGENDA MEMO

TO: Mayor & City Commission **AGENDA DATE:** 10/21/2013

FROM: William D. Denny, Acting City Manager **AGENDA ITEM:** 10 - C

SUBJECT: Request to authorize the Acting City Manager to begin negotiations with Capitol Insight for Government Relations and Lobbying Services and approval of a budget amendment for $50,000

LOCATION: N/A

BACKGROUND: An RFP was issued for a Consultant for State Government Relations and Lobbying. The Selection Committee short-listed four companies to present and interview with the Commission on October 15, 2013. Afterwards the Commission ranked the firms one through four with one being the firm they would like to begin negotiations with. The initial ranking was as follows:

1. Capitol Alliance and Capitol Insight, LLC (Tied)
2. Ballard Partners, Inc.
3. Louis C. Rotundo

On the initial ranking, two firms tied score. They were Capitol Alliance and Capitol Insight. The Commission did a final ranking of these two firms and Capitol Insight, LLC was the firm that was ranked number one. The initial and final ranking sheets are attached.

ORIGINATING DEPARTMENT: City Manager's Office

SOURCE OF FUNDS: General Fund-Fund Balance

COST: Not to exceed $50,000

REVIEWED BY: William D. Denny, Acting City Manager

STAFF RECOMMENDATION PRESENTED BY:	William D. Denny, Acting City Manager - Recommendation is being made to authorize the Acting City Manager to begin negotiations with the Capitol Insight, LLC and enter into an agreement not to exceed $50,000, to include all expenses, upon successful negotiations. If unable to come to an agreement, negotiations will be terminated and negotiations will take place with the Capitol Alliance and continue until an agreement is reached and award is made. A budget amendment for $50,000 from Fund Balance is required for these services.
POTENTIAL MOTION:	"I move to authorize a budget amendment from Fund Balance for $50,000 and for the Acting City Manager to begin negotiations with the Capitol Insight, LLC and enter into an agreement not to exceed $50,000, to include all expenses, upon successful negotiations. If unable to come to an agreement, negotiations will be terminated and negotiations will take place with the Capitol Alliance and continue until an agreement is reached and award is made."
AGENDA ITEM APPROVED BY:	_____ William D. Denny, Acting City Manager
ATTACHMENTS:	• INITIAL RANKING SHEETS • FINAL RANKING SHEETS • Budget Amendment

RFP#14001 CONSULTANT FOR STATE GOVERNMENT RELATIONS SERVICES AND LOBBYING

INITIAL RANKING SHEETS FOR LOBBYING SERVICES				
	Ballard Partners, Inc.	Capitol Alliance	Capitol Insight, LLC	Louis C. Rotundo
Mayor Masiarczyk	1	3	2	4
Commissioner Schleicher	4	1	2	3
Commissioner Nabicht	2	3	4	1
Commissioner Herzberg	3	1	2	4
Commissioner Denizac	1	3	2	4
Commissioner Lowry	2	3	1	4
Commissioner Barnaby	3	1	2	4
	16	**15**	**15**	**24**

RATING SHEET FOR:

RFP #14001 FOR CONSULTANT FOR STATE GOVERNMENT RELATIONS SERVICES AND LOBBYING

Rank the following companies 1 through 4 with 1 being your top choice.

COMPANY	RANKING
Ballard Partners, Inc.	1
Capitol Alliance	3
Capitol Insight, LLC	2
Louis C. Rotundo	4

Please turn this sheet in to the City Clerk. The final ranking will be brought to the Commission for approval at the October 21, 2013 meeting.

Signature

RATING SHEET FOR:

RFP #14001 FOR CONSULTANT FOR STATE GOVERNMENT RELATIONS SERVICES AND LOBBYING

Rank the following companies 1 through 4 with 1 being your top choice.

COMPANY		RANKING	
Ballard Partners, Inc.	4		4
Capitol Alliance	1		1
Capitol Insight, LLC	2		3
Louis C. Rotundo	3		2

Please turn this sheet in to the City Clerk. The final ranking will be brought to the Commission for approval at the October 21, 2013 meeting.

Nancy Schenck
Signature

RATING SHEET FOR:

RFP #14001 FOR CONSULTANT FOR STATE GOVERNMENT RELATIONS SERVICES AND LOBBYING

Rank the following companies 1 through 4 with 1 being your top choice.

COMPANY	RANKING
Ballard Partners, Inc.	2
Capitol Alliance	3
Capitol Insight, LLC	4
Louis C. Rotundo	1

Please turn this sheet in to the City Clerk. The final ranking will be brought to the Commission for approval at the October 21, 2013 meeting.

Signature

RATING SHEET FOR:

RFP #14001 FOR CONSULTANT FOR STATE GOVERNMENT RELATIONS SERVICES AND LOBBYING

Rank the following companies 1 through 4 with 1 being your top choice.

COMPANY	RANKING
Ballard Partners, Inc.	3
Capitol Alliance	1
Capitol Insight, LLC	2
Louis C. Rotundo	4

Please turn this sheet in to the City Clerk. The final ranking will be brought to the Commission for approval at the October 21, 2013 meeting.

Signature

RATING SHEET FOR:

RFP #14001 FOR CONSULTANT FOR STATE GOVERNMENT RELATIONS SERVICES AND LOBBYING

Rank the following companies 1 through 4 with 1 being your top choice.

COMPANY	RANKING
Ballard Partners, Inc.	1
Capitol Alliance	3
Capitol Insight, LLC	2
Louis C. Rotundo	4

Please turn this sheet in to the City Clerk. The final ranking will be brought to the Commission for approval at the October 21, 2013 meeting.

Signature

RATING SHEET FOR:

RFP #14001 FOR CONSULTANT FOR STATE GOVERNMENT RELATIONS SERVICES AND LOBBYING

Rank the following companies 1 through 4 with 1 being your top choice.

BH	DB	CB	COMPANY	RANKING
2	3	3	Ballard Partners, Inc.	2
1	1	1	Capitol Alliance	3
1	4	2	Capitol Insight, LLC	1
4	2	4	Louis C. Rotundo	4

Please turn this sheet in to the City Clerk. The final ranking will be brought to the Commission for approval at the October 21, 2013 meeting.

Signature

RATING SHEET FOR:

RFP #14001 FOR CONSULTANT FOR STATE GOVERNMENT RELATIONS SERVICES AND LOBBYING

Rank the following companies 1 through 4 with 1 being your top choice.

COMPANY	RANKING
Ballard Partners, Inc.	3
Capitol Alliance	1
Capitol Insight, LLC	2
Louis C. Rotundo	4

Please turn this sheet in to the City Clerk. The final ranking will be brought to the Commission for approval at the October 21, 2013 meeting.

Signature

RFP#14001 CONSULTANT FOR STATE GOVERNMENT RELATIONS SERVICES AND LOBBYING

FINAL RANKING SHEETS FOR LOBBYING SERVICES		
	Capitol Alliance	Capitol Insight, LLC
Mayor Masiarczyk	2	1
Commissioner Schleicher	1	2
Commissioner Nabicht	1	2
Commissioner Herzberg	1	2
Commissioner Denizac	2	1
Commissioner Lowry	2	1
Commissioner Barnaby	2	1
	11	**10**

RATING SHEET FOR:

RFP #14001 FOR CONSULTANT FOR STATE GOVERNMENT RELATIONS SERVICES AND LOBBYING

Rank the following companies 1 through 4 with 1 being your top choice.

COMPANY	RANKING
~~Ballard Partners, Inc.~~	
Capitol Alliance	2
Capitol Insight, LLC	1
~~Louis C. Rotundo~~	

Please turn this sheet in to the City Clerk. The final ranking will be brought to the Commission for approval at the October 21, 2013 meeting.

John Mason

Signature

RATING SHEET FOR:

RFP #14001 FOR CONSULTANT FOR STATE GOVERNMENT RELATIONS SERVICES AND LOBBYING

Rank the following companies 1 through 4 with 1 being your top choice.

COMPANY	RANKING
~~Ballard Partners, Inc.~~	
Capitol Alliance	1
Capitol Insight, LLC	2
~~Louis C. Rotundo~~	

Please turn this sheet in to the City Clerk. The final ranking will be brought to the Commission for approval at the October 21, 2013 meeting.

Nancy Schlecker
Signature

RATING SHEET FOR:

RFP #14001 FOR CONSULTANT FOR STATE GOVERNMENT RELATIONS SERVICES AND LOBBYING

Rank the following companies 1 through 4 with 1 being your top choice.

COMPANY	RANKING
~~Ballard Partners, Inc.~~	
Capitol Alliance	1
Capitol Insight, LLC	2
~~Louis C. Rotundo~~	

Please turn this sheet in to the City Clerk. The final ranking will be brought to the Commission for approval at the October 21, 2013 meeting.

Signature

RATING SHEET FOR:

RFP #14001 FOR CONSULTANT FOR STATE GOVERNMENT RELATIONS SERVICES AND LOBBYING

Rank the following companies 1 through 4 with 1 being your top choice.

COMPANY	RANKING
~~Ballard Partners, Inc.~~	
Capitol Alliance	1
Capitol Insight, LLC	2
~~Louis C. Rotundo~~	

Please turn this sheet in to the City Clerk. The final ranking will be brought to the Commission for approval at the October 21, 2013 meeting.

Signature

RATING SHEET FOR:

RFP #14001 FOR CONSULTANT FOR STATE GOVERNMENT RELATIONS SERVICES AND LOBBYING

Rank the following companies 1 through 4 with 1 being your top choice.

COMPANY	RANKING
~~Ballard Partners,~~ Inc.	
Capitol Alliance	2
Capitol Insight, LLC	1
~~Louis C. Rotundo~~	

Please turn this sheet in to the City Clerk. The final ranking will be brought to the Commission for approval at the October 21, 2013 meeting.

Signature

RATING SHEET FOR:

RFP #14001 FOR CONSULTANT FOR STATE GOVERNMENT RELATIONS SERVICES AND LOBBYING

Rank the following companies 1 through 4 with 1 being your top choice.

COMPANY	RANKING
~~Ballard Partners~~, Inc.	
Capitol Alliance	2
Capitol Insight, LLC	1
~~Louis C. Rotundo~~	

Please turn this sheet in to the City Clerk. The final ranking will be brought to the Commission for approval at the October 21, 2013 meeting.

Signature

RATING SHEET FOR:

RFP #14001 FOR CONSULTANT FOR STATE GOVERNMENT RELATIONS SERVICES AND LOBBYING

Rank the following companies 1 through 4 with 1 being your top choice.

COMPANY	RANKING
~~Ballard Partners, Inc.~~	
Capitol Alliance	2
Capitol Insight, LLC	1
~~Louis C. Rotundo~~	

Please turn this sheet in to the City Clerk. The final ranking will be brought to the Commission for approval at the October 21, 2013 meeting.

W Landry

Signature

City of Deltona

Budget Amendment

Amendment #: 2014-03 Date: October 21, 2013

Fund: 001-General Fund Agenda Item:

			Increase	Decrease
Account #:	001110 523101	Amount:	50,000	
Description:	PROFESSIONAL SERVICES - OTHER			
Account #:		Amount:		
Description:				
Account #:		Amount:		
Description:				
Account #:		Amount:		
Description:				
Account #:		Amount:		
Description:				
Account #:		Amount:		
Description:				
Account #:		Amount:		
Description:				
Account #:		Amount:		
Description:				
Account #:		Amount:		
Description:				
Account #:		Amount:		
Description:				

Description: This amendment results in a net decrease in Budgetary Fund Balance of $50,000.

Reason: **Fund Lobbying Services for FYE '14 as discussed in October 15th workshop.**

ATTEST:

John C. Masiarczyk, Sr., Mayor

Joyce Raftery, City Clerk

AGENDA MEMO

TO: Mayor & City Commission **AGENDA DATE:** 10/21/2013

FROM: William D. Denny, Acting City Manager **AGENDA ITEM:** 10 - D

SUBJECT: Update re: Scrub Jay Mitigation Project.

LOCATION:	N/A
BACKGROUND:	Acting City Manager to provide an update to the City Commision on the Scrub Jay Mitigation Project.
ORIGINATING DEPARTMENT:	City Manager's Office
SOURCE OF FUNDS:	N/A
COST:	N/A
REVIEWED BY:	Acting City Manager
STAFF RECOMMENDATION PRESENTED BY:	N/A - For discussion and direction to staff as necessary.
POTENTIAL MOTION:	N/A - For discussion and direction to staff as necessary.
AGENDA ITEM APPROVED BY:	William D. Denny, Acting City Manager