Solicitation Documents and Technical Specifications for Construction of:

<u>TIPTON DRIVE IMPROVEMENTS</u>

City of Deltona Bid # PW 13-06
Tetra Tech #200-08534-12007

February 2013

For the City of Deltona, Florida

TABLE OF CONTENTS
FOR THE

TIPTON DRIVE IMPROVEMENTS

BIDDING, CONTRACT DOCUMENTS AND SPECIFICATIONS
CITY OF DELTONA BID #PW 13-06

DIVISION 0 – BIDDING AND CONTRACT REQUIREMENTS

Section	Title
00020	Advertisement for Bids
00110	Bidders Contact and Information Form
00300	Bid Response Form
00300A	Schedule of Base Bid Manufacturers / Suppliers Form
00300B	Substitution of Manufacturers / Suppliers Form
00301	Questionnaire Form
00301A	Subcontractor Listing Form
00301B	References Form
00410	Bid Bond Form
00420	Corporate Resolution
00430	Hold Harmless and Indemnity Agreement
00460	Proposer's Certification Form
00470	Public Entity Crimes Form
00480	Non-Collusion Affidavit
00490	Trench Safety Affidavit
00500	Sample Agreement
00610	Performance Bond
00620	Payment Bond
00700A	General Information and Instructions to Bidders
00700B	General Conditions
00800	Supplementary Conditions
00843	Change Order Form
00844	Application for Payment Form
00845	Schedule of Values
00846	Materials Stored On Site Form
00847	Shop Drawing Submittal Form
00848	Certificate of Substantial Completion Form
00849	Final Release of Lien Form
00850	Field Order Form
00851	Contractor Request for Information Form
00853	Pressure Test Form
00861	Work Directive Form
00863	Change Proposal Summary Form
00864	Request for Proposal Change Form

DIVISION 1 – GENERAL REQUIREMENTS

Section	Title
01025	Measurement and Payment
01065	Permits and Fees
01100	Special Project Procedures
01340	Shop Drawings, Working Drawings, and Samples
01410	Testing and Testing Laboratory Services
01568	Temporary Erosion and Sedimentation Control
01720	Project Record Documents

DIVISION 2 – SITEWORK

Section	Title
02080	Removal and Disposal of Existing Pipe Removed from Service
02100	Site Preparation
02140	Dewatering
02221	Trenching, Backfilling, and Compaction
02509	Concrete Sidewalks
02574	Pavement Removal and Replacement
02922	Seeding and Mulching
02934	Solid Sodding

DIVISION 3 – CONCRETE

Section	Title
03100	Concrete Formwork
03200	Concrete Reinforcement
03262	Concrete Joints
03300	Cast-In-Place Concrete
03410	Precast Concrete Structures
03600	Grouting
03612	Reinforced Concrete Pipe and Fittings

DIVISION 9 – COATINGS

Section	Title
09905	Piping, Valve, and Equipment Identification System

DIVISION 15 – MECHANICAL

Section	Title
15044	Pressure Testing of Piping
15050	Utility Piping, Fittings, Valves and Accessories

DIVISION 0

BIDDING AND CONTRACT REQUIREMENTS

Bid Advertisement
For
THE CITY OF DELTONA
PUBLIC WORKS DIVISION

ITB # PW 13-06
Tipton Drive Improvements

NOTICE IS HEREBY GIVEN: That sealed bids will be received by the City of Deltona, Public Works Division, at 255 Enterprise Road, Deltona, Florida 32725; until Wednesday, March 13, 2013 at 2:00 p.m.

Any bids received after the above time will not be accepted under any circumstances. Bids will not be accepted at any other location within the City except for the address above. Bids will not be accepted at City Hall. Any uncertainty regarding the time a bid is received will be resolved against the Bidder.

Bid opening will be promptly at 2:00 p.m. on Wednesday, March 13, 2013 at the Deltona Water Administration 2nd floor Conference Room, 255 Enterprise Road, Deltona, Florida 32725, at which time all bids received will be publicly opened and read aloud.

MANDATORY PRE-BID CONFERENCE: A mandatory pre-bid conference will be held at the City of Deltona Water Department located at 255 Enterprise Road, Deltona, Florida 32725, 2nd floor training room on Tuesday, February 26, 2013 at 10:00 a.m. Representatives of the City will be present to discuss the Project. Bidders must attend the conference for your bid to be considered. City will transmit to all prospective Bidders of record such Addenda as City considers necessary in response to questions arising at the conference. Oral statements made by the City may not be relied upon and will not be binding or legally effective.

DESCRIPTION OF WORK: All work for the Project shall be constructed in accordance with the Drawings and Specifications prepared by Tetra Tech, Inc. and the proposed improvements will be awarded and constructed, if award is made, under one Contract. Bids shall be submitted for furnishing, delivering and installing all materials, equipment and services, including labor, for the Work, which generally involves:

- Construction of a permanent storm conveyance system from the drainage retention area (DRA) along Tradewinds Drive to Lake Louise.

Engineers Estimate for this project is $260,000.00.

Bid bond is required.

Payment and Performance bond is required.

To obtain a copy of the Bidding Documents, requestors shall contact in writing:

Kate Krauss, CPPO, CPPB, SPSM
Purchasing Manager for the City of Deltona
255 Enterprise Road, Deltona, Florida 32725
Email at kkrauss@deltonafl.gov
Phone number: 386-878-8570

Vendor's who receive the bidding documents from the Purchasing Agent directly, shall be added as a planholder on Demandstar and shall receive all corresponding documents through the Demandstar website.

Bids shall be prepared from complete Bidding Documents. Addendum will be sent via DemandStar to all holders of complete solicitation Bidding Documents up to forty eight (48) hours before bid time. Brief addendums may be issued between forty eight (48) hours and twenty-four (24) hours before bid time by facsimile to all holders of complete Bidding Documents.

The City reserves the right to reject any or all proposals, to waive informalities in the proposals and to re-advertise for proposals. The City also reserves the right to separately accept or reject any item or items of a proposal and to award and/or negotiate a contract in the best interest of the City.

All questions are to be directed, IN WRITING, to Kate Krauss at kkrauss@deltonafl.gov or faxed to (386) 878-8571 seven calendar days prior to due date in order to issue an addenda.

CONTACT:
All prospective proposers are hereby instructed not to contact any member of the City of Deltona Commission, City Manager, City of Deltona Staff members or Engineers contracted by the City for this project, other than the noted contact person OR a member of the Purchasing staff regarding this Item to Bid or their response at any time during the Bid process. Any such contact shall be cause for rejection of your submittal.

- Questions regarding this bid are to be addressed in writing to:
  Kate Krauss, CPPO, CPPB, SPSM
  Purchasing Manager
  255 Enterprise Road
  Deltona, FL 32725
  E-Mail Address: kkrauss@deltonafl.gov
  Or Fax: (386) 878-8571

General Conditions, Instructions and Information for Bidders

CONTACT: All prospective Applicants (Bidders) are hereby instructed not to contact any member of the City of Deltona City Commission, City Manager, City of Deltona (City) staff members or Engineers contracted by the City of Deltona, other than the noted contact person regarding this solicitation or their bid submittal at any time during the solicitation process. Any such contact shall be cause for rejection of your bid submittal.

PUBLIC OPENING: Bid submittals shall be received at the City of Deltona Public Works Division, 255 Enterprise Road, Deltona, Florida 32725 on or before Wednesday, March 13, 2013 at 2:00 p.m. Bid submittals shall be opened publically and shall be read aloud at that time. Persons with disabilities needing assistance to participate in the Public Opening should contact Kate Krauss at 386-878-8570 or at kkrauss@deltonafl.gov at least 72 hours in advance of the Public Opening.

DELAYS: The City, at its sole discretion, may delay the scheduled due dates indicated above if it is to the advantage of the City to do so. The City will notify Bidders of all changes in scheduled due dates by posting the notification in the form of addenda on www.demandstar.com.

EXECUTION OF BID: Bid must contain a manual signature, in ink, of an authorized representative, who has the legal ability to bind the Bidder in contractual obligations in the space provided on the Bid Response Form. Failure to properly sign the Bid shall invalidate same, and it shall not be considered for award. Bid must b type or legibly printed in ink. Use of erasable ink is not permitted. All corrections made by Bidder to any part of the bid document must be initialed in ink. The original bid conditions and specifications cannot be changed or altered in any way. Altered bids will not be considered. Clarification of bids submitted shall be in letter form, signed by bidders and attached to the bid.

BID SUBMISSION AND WITHDRAWAL: The City shall receive Bid submittals at the above address, on the date and at the time specified above. Submittals sent to any other location shall not be accepted. Proposals shall not be submitted to City Hall, nor will they be accepted at City Hall. The outside of the envelope/container must be identified with the Bid number and title as stated above. The envelope/container must also include the Bidder's name and return address. Reciept of the Bid submittal in the Public Works Division after the time and date specified due to failure by the Bidder to provide the above information on the outside of the envelope/container shall result in the rejection of the bid submittal.

Bid submittals received at another location, other than the location noted above, or received after the specified time and date shall be returned unopened. The time and date will be scrupulously observed. The City shall not be responsible for late deliveries or delayed mail. The time/date stamp clock located in the Purchasing Agents office at the Public Works Division, located at 255 Enterprise Road, Deltona, Florida 32725, shall serve as the official authority to determine lateness of any bid submittal. It is the Bidders sole responsibility to assure that his/her bid is complete and delivered at the proper time and place of the bid opening. Bids which for any reason are not so delivered will not be considered. Offers by facsimile, telegram or telephone are not acceptable. A bid may NOT be altered by the Bidder after opening of the bids.

The City cautions Bidders to assure actual delivery of mailed or hand-delivered Bid submittals prior to the deadline set for receiving Bid submittals. Telephone confirmation of timely receipt of the Bid submittal may be made by calling (386) 878-8955, before the 2:00 p.m. deadline.

Bidders shall submit five (5) COMPLETE SETS (one [1] original, three [3] copies and one [1] electronic copy (CD)) of the Bid submittal with all supporting documentation in a sealed envelope/container marked as noted above. The CD should be an exact duplicate of the hard copies and should be one complete file (PDF preferred), not a series of files. The Bidder may submit the Bid submittal in person or by mail. Bids that are hand delivered shall be dropped off at the receiving door, under the metal stairs, on the north end of the Deltona Water Building at 255 Enterprise Road, Deltona, Florida 32725.

Bidders may withdraw their Bid submittals by notifying the City in writing at any time prior to the time set for the Bid deadline. Bidders may withdraw their bid submittals in person or through an authorized representative. Bidders and authorized representatives must disclose their identity and provide a signed receipt for the bid submittal. Bid submittals, once opened, become the property of the City and will not be returned to the Bidders.

No additional information may be submitted, or follow-up made, by any Bidder after the stated due date, unless requested by the City. At the time of opening and immediate review of the bid submittals, the City reserves the right to request all required forms/attachments that may have not been submitted at the time of submittal. The respondent shall have twenty four (24) hours to supply this information to the City for their bid submittal to be considered valid.

INQUIRIES / INTERPRETATIONS / CLARIFICATION / ADDENDA: All Bidders shall carefully examine the bid documents. Any ambiguities or inconsistencies shall be brought to the attention of the Public Works Division Purchasing Agent in writing prior to the due date; failure to do so, on the part of the Bidder, will constitute an acceptance by the Bidder of any subsequent decision. Any question concerning the intent, meaning and interpretations of the bid documents including the attached draft agreement, shall be requested in writing, and received by the Public Works Division Purchasing Agent at least seven (7) business days prior to the due date. Any inquiry or request for interpretation received seven (7) or more calendar days prior to the date fixed for opening of responses will be given consideration. All such changes or interpretations will be made in writing in the form of an addendum, if issued. Each Respondent shall acknowledge receipt of such addenda in the space provided therefore in the bid form. In case any Respondent fails to acknowledge receipt of such addenda or addendum, his response will nevertheless be construed as though it had been received and acknowledged and the submission of his response will constitute acknowledgment of the receipt of same. All addenda are a part of the contract documents and each Respondent will be bound by such addenda, whether or not received by him. It is the responsibility of each Respondent to verify that he has received all addenda issued before responses are opened.

The City shall not be responsible for any oral instructions made by any employee(s) of the City in regard to this bid. All inquiries shall be in writing and directed to the Purchasing Manager, Kate Krauss, at Fax No. (386) 878-8571 or email to kkrauss@deltonafl.gov . Oral statements given before the Proposal Due Date will not be binding.

ADDENDA: The City will record its responses to inquiries, any supplemental instructions, and / or necessary revisions to Bid Documents, in the form of a written addendum. Should revisions to the bid documents become necessary; the City shall post addenda information on the Onvia website at www.demandstar.com which will

go out to all Bidders who received a bid package through Demandstar. All addenda are posted to the Demandstar website and current planholders are notified that an addendum has been issued. Bidders who obtain Bid Documents from third party sources, such as plans rooms, must officially register with the City's Public Works Divisions Purchasing Agent in order to be placed on the Demandstar website as a bid holder in order to receive any forthcoming addenda or other official communications. Failure to register as a prospective Bidder may cause your bid to be rejected as non-responsive if you have failed to submit a bid without an addendum acknowledgment for the most current addendum. All Bidders should check the Demandstar website at least forty-eight (48) hours before the date fixed to verify information regarding Addenda. Failure to do so could result in rejection of the bid submittal as unresponsive. Bidder shall sign, date and return all addenda with their bid submittal.

All addenda will be posted on www.demandstar.com. It is the sole responsibility of the Bidder to ensure he/she obtains information related to Addenda. It is the vendor's responsibility to check the Demandstar website in order to be sure latest addendum and any prior addendum have been received.

PREPARATION COSTS: Neither the City nor its representatives shall be liable for any expenses incurred in connection with preparation of a response to this bid.

ACCURACY OF BID SUBMITTAL INFORMATION: Any Bidder that submits in his/her bid submittal to the City any information which is determined to be substantially inaccurate, misleading, exaggerated, or incorrect, shall be disqualified from consideration.

INSURANCE: Misrepresentation of any material fact, whether intentional or not, regarding the Bidder's insurance coverage, policies or capabilities may be grounds for rejection of the bid submittal and rescission of any ensuing contract. An endorsement of the City of Deltona being additionally insured and a copy of the insurance certificate shall be furnished to the City prior to final execution of the contract.

LICENSES: Bidders, both corporate and individual, must be fully licensed and certified for the type of work to be performed in the State of Florida at the time of submittal of bid. Should the Bidder not be fully licensed and certified, his/her bid submittal shall be rejected. Any permits, licenses, or fees required shall be the responsibility of the Bidder. No separate or additional payment will be made for these costs. Adherence to all applicable code regulations, Federal, State, City, etc., are the responsibility of the Bidder.

POSTING OF BID AWARD: Recommendation for award will be posted for review by interested parties on www.demandstar.com prior to submission through the appropriate approval process. Failure to file protest to the Purchasing Manager within the time prescribed in the City's Purchasing Policy and Procedures shall constitute a waiver of proceedings.

PROTESTS: Any Bidder who disputes the selection or contract award recommendation shall file such protest according to the bid protest procedures. These procedures are available upon request from the City.

PUBLIC RECORDS: Upon award recommendation or ten (10) days after receiving, RFP submittals become "public records" and shall be subject to public disclosure with Chapter 119, Florida Statutes. Bidders must invoke the exemptions to disclosure provided by law in the response to the RFP, and must identify the data or other materials to be protected, and must state the reasons why such exclusion from public disclosure is necessary.

PROHIBITION AGAINST CONTINGENT FEES: The Bidder warrants that he/she has not employed or retained any company or person, other than a bona fide employee working solely for the Bidder, to solicit or secure this Agreement and that the Bidder has not paid, or agreed to pay, any person, company, corporation, individual or firm, other than a bona fide employee working solely for the Bidder, any fee, commission, percentage, gift, or other consideration contingent upon, or resulting from, award or making of this Agreement. For the breach or violation of this provision, the City shall have the right to terminate this Agreement at its sole discretion, without liability, and to deduct from the Agreement price, or otherwise recover, the full amount of such fee, commission, percentage, gift or consideration.

ACCEPTANCE / REJECTION: The City reserves the right to accept or reject any or all RFP submittals and to make the award to those Bidders, who in the opinion of the City will be in the best interest of and/or the most advantageous to the City. The City also reserves the right to reject the RFP submittal of any vendor who has previously failed in the proper performance of an award or to deliver on time contracts of a similar nature or who, in the City's opinion, is not in a position to perform properly under this award. The City reserves the right to inspect all facilities of Bidders in order to make a determination as to the foregoing. The City reserves the right to waive any irregularities, informalities, and technicalities and may at its discretion, request a re-procurement.

EQUIVALENT MATERIALS AND EQUIPMENT: Whenever materials or equipment are specified or described in the specifications by using the name of a proprietary item or the name of a particular supplier, the naming of the item is intended to establish the type, function and quality required. Unless the name is followed by words indicating that no substitution is permitted, materials or equipment of other suppliers may be accepted by the City if sufficient information is submitted by Bidder to allow the City to determine that the material or equipment proposed is equivalent to that named.

Requests for review of substitute items of material and equipment will not be accepted by the City from anyone other than Bidder. If Bidder wishes to furnish or use a substitute item of material or equipment, Bidder shall indicate this action within this solicitation, make written application to the City for acceptance thereof, certifying that the proposed substitute will perform adequately the functions called for by the general design, be similar and of equal substance to that specified and be suited to the same use and capable of performing the same function as that specified.

All variations of the proposed substitute from that specified shall be identified in the solicitation and the Bidder is responsible for any expense incurred by the City from evaluation and acceptance of the proposed substitute, including claims of other Bidders affected by the resulting substitute, all of which will be considered by the City in evaluating the proposed substitute.

Bidder assumes sole responsibility for verifying that the proposed substitute items are in accordance with the requirements of the contract documents, and that the specifications and all other features of substitute items are suitable for the intended purpose.

ADDITIONAL TERMS AND CONDITIONS: Unless expressly accepted by the City, the following conditions shall apply: No additional terms and conditions included with the bid submittal shall be considered. Any and all such additional terms and conditions shall have no force and effect, and are inapplicable to this bid if submitted either purposely through intent or design, or inadvertently appearing separately in transmittal letters, specifications, literature, price lists or warranties. It is understood and agreed that the general and/or any special conditions in these Bid Documents are the only conditions applicable to this bid submittal and the Bidder's authorized signature on the Bid Response Form attests to this. Exceptions to the terms and conditions will not be accepted.

PURCHASING CODE: The City of Deltona Purchasing Policy and Procedures apply in its entirety with respect to this solicitation.

AFFIRMATION: By submission of an bid submittal, Bidder affirms that his/her bid submittal is made without prior understanding, agreement or connection with any corporation, firm, or person submitting a proposal for the same materials, supplies, equipment or services, and is in all respects fair and without collusion or fraud. Bidder agrees to abide by all conditions of these bid documents and the resulting contract.

MISTAKES IN PROPOSAL: Bidders are expected to examine the terms and conditions, specifications, delivery schedule, prices, extensions and all instructions pertaining to supplies and services. FAILURE TO DO SO WILL BE AT BIDDER'S RISK. In the event of extension error(s), the unit price will prevail and the Bidder's total offer will be corrected accordingly. Written amounts shall take precedence over numerical amounts. In the event of addition errors(s), the unit price, and extension thereof, will prevail and the Bidder's total offer will be corrected accordingly. Bid submittals having erasures or corrections must be initialed in ink by the Bidder.

DISQUALIFICATION OF BIDDER: More than one bid submittal from an individual, firm, partnership, corporation, or association under the same or different names shall not be considered. Reasonable grounds for believing that a Bidder is involved in more than one bid submittal will be cause for rejection of all bid submittals in which such Bidders are believed to be involved. Any or all bid submittals will be rejected if there is reason to believe that collusion exists between Bidders. Bid submittals in which the prices obviously are unbalanced will be subject to rejection.

JOINT VENTURES: Proposals submitted by firms under "joint venture" arrangements or other multi-party agreements must submit a power of attorney delegating authority to one principal with authority to negotiate and execute any/all contract documents resulting from negotiations/award of this solicitation.

CERTIFICATES: The City reserves the right to require proof that the bidder is an established business and is abiding by the Ordinances, Regulations, and Laws of their Community and the State of Florida such as but not limited to: Occupational Licenses, Business Licenses, Florida Sales Tax Registration, and Federal Employee Identification Number.

FACILITIES: The City reserves the right to inspect the Bidder's facilities at any reasonable time, during normal working hours, to determine that Bidder has a bona fide place of business, and is a responsible Bidder.

CONFLICT OF INTEREST: All Bidders must disclose with their bid the name of any officer, director, or Agent who is also an employee of the City. All Bidders must disclose the name of any City employee who owns, directly or indirectly, an interest of five percent (5%) or more in the Bidder's firm or any of its branches.

QUANTITIES: The City shall not be held to any maximum or minimum purchase quantities as a result of this solicitation and/or resulting contract. The City reserves the right to purchase any, all or none of its requirements form vendors awarded a contract as a result of this solicitation. All quantities as shown are approximate and no guarantee is made that any materials will be purchased.

DISCOUNTS: Cash discounts for prompt payment shall not be considered in determining the lowest net cost for bid evaluation purposes.

AWARD: As the best interest of the City may require, the right is reserved to make award(s) by individual item, group of items, "All or None", or a combination thereof; with one or more suppliers; to reject any or all bids, or waive any minor irregularity or technicality in bids received, award or eliminate any portion of the bid, and may, at its sole discretion, request a re-bid, or abandon the project in its entirety. Bidders are cautioned to make no assumption until the City has entered into a contract or issued a purchase order.

ASSIGNMENT: Any purchase order or contract issued pursuant to this Invitation to Bid and the monies which may become due hereunder are not assignable except with the prior written approval of the City, through the Finance Department.

CONTRACTUAL AGREEMENT: The contents of this Bid and all provisions of the successful bid proposal deemed pertinent by the City may be incorporated into a contract and become legally binding. A separate contract document, other than the purchase order, may or may not be issued. Any and all legal action necessary to enforce a contract or purchase order will be interpreted according to the laws of Florida. The venue shall be County of Volusia, Florida.

AWARD TERM: This bid shall remain open for a period of one year from date of award.

DRUG FREE WORKPLACE: Preference shall be given to business with Drug-Free Work Place (DFW) programs. Whenever two or more bids which are equal with respect to price, quality, and service are received by the City for the procurement of commodities or contractual services, a bid received from a business that completes the attached DFW form certifying that it is a DFW shall be given preference in the award process.

GOVERNMENTAL RESTRICTIONS: In the event that any governmental restrictions are imposed which would necessitate alteration of the material quality, workmanship or performance of the items offered on this bid prior to their delivery, it shall be the responsibility of the Bidder to notify the Purchasing Agent at once, indicating in his/her letter the specific regulation which required an alteration, including any price adjustments occasioned thereby. The City reserves the right to accept such alteration or to cancel the contract or purchase order at no further expense to the City.

PATENTS AND COPYRIGHTS: The Bidder, without exemption, shall indemnify and save harmless, the City, its employees and/or any of its Commissioners from liability of any nature or kind, including cost and expenses for or on account of any copyrighted, patented, or unpatented invention, process, or item manufactured by the Bidder. Further, if such a claim is made, or is pending, the Bidder may, at its option and expense, procure for the City the right to use, replace or modify the item to render it non-infringing. If none of the alternatives are reasonably available, the City agrees to return the article on request to the Bidder and receive reimbursement. If the Bidder used any design, device, or materials covered by letters, patent or copyright, it is mutually agreed and understood, without exception, that the bid submittal prices shall include all royalties or cost arising from the use of such design, device, or materials in any way involved in the work.

COMPLIANCE WITH OCCUPATIONAL SAFETY AND HEALTH: Bidder certifies that all material, equipment, etc., contained in his/her bid meets all applicable O.S.H.A. requirements. Bidder further certifies that, if he/she is the successful Bidder, and the material, equipment, etc., delivered is subsequently found to be defective in any applicable O.S.H.A. requirement in effect on the date of delivery, all costs necessary to comply with the requirements shall be borne by the Bidder.

RESPONSIBILITY: A Bidder shall have at the time of bid opening, a company in operation, (if applicable) or be a fully authorized Agent or representative of the product bid, and capable of producing or providing the items bid, and follow-up parts and service, including any warranty services as applicable, and so provide such certification upon request.

PURCHASING AGREEMENTS WITH OTHER GOVERNMENT AGENCIES: All Bidders submitting a response to this solicitation agree that such response also constitutes a bid submittal to all governmental agencies, under the same conditions, for the same contract price, and for the same effective period as this RFP submittal, should the Bidder feel it is in their best interest to do so.

Each governmental agency desiring to accept these bid submittals, and makes an award thereof, shall do so independently of any other governmental agency. Each agency shall be responsible for its own purchases and each shall be liable only for materials and/or services ordered and received by it, and no agency assumes any liability by virtue of this bid.

This agreement in no way restricts or interferes with the right of any governmental agency to Re-Request for Proposal any or all items.

ADVERTISING: In submitting a bid, Bidder agrees not to use the results therefrom as a part of any commercial advertising, without the express written approval, by the appropriate level of authority within the City.

NON-APPROPRIATION OF FUNDS: In the event that insufficient funds are appropriated and budgeted or funding is otherwise unavailable in any fiscal period for this bid, the City shall have the unqualified right to terminate the Work Order(s) or Agreement upon written notice to the Consultant, without any penalty or expense to the City. No guarantee, warranty or representation is made that any particular work or any project(s) will be assigned to any firm(s).

TAXES: The City is exempt from Federal Excise and State Sales Taxes on direct purchases of tangible personal property. The City's exemption numbers are on the face of the purchase order. If requested, the Purchasing Agent will provide an exemption certificate to the awarded proposal(s). Vendors/contractors doing business with the City shall not be exempted from paying sales tax to their suppliers for materials to fulfill contractual obligations with the City nor shall any Vendor/Contractor be authorized to use the City's Tax Exemption Number in securing such materials.

EVIDENCE OF INSURANCE: The awarded Contractor shall be required to provide an endorsement from their Insurance Company showing proof of the City of Deltona being additionally insured. The endorsement is to be signed by a person authorized by that insurer to bind coverage on its behalf. The City of Deltona is to be specifically included as an additional insured on all policies. In the event the insurance coverage expires prior to the completion of the project, a renewed endorsement shall be issued 30-days prior to said expiration date. The policy shall provide a 30-day notification clause in the event of cancellation or modification to the policy. All endorsements of insurance must be on file with and approved by the City of Deltona before the commencement of any work activities. Failure to provide these documents by the awarded Contractor shall not result in a contract. Documents shall be provided prior to a contract being signed between the awarded Contractor and the City of Deltona.

PERMITS / LICENSES / FEES: Any permits, licenses, or fees required for these services shall be paid for and obtained by the Contractor and the responsibility of the Contractor. No separate or additional payment will be made by the City. Adherence to all applicable code regulations (Federal, State, City) are the responsibility of the Contractor.

LEGAL REQUIREMENTS: Bidders are required to comply with all provisions of Federal, State, City and local laws and ordinances, rules and regulations that are applicable to the items being bid. Lack of knowledge by the Bidder shall in no way be a cause for relief from responsibility, or constitute a cognizable defense against the legal effect thereof.

EEO STATEMENT: The City is committed to assuring equal opportunity in the award of contracts, and, therefore complies with all laws prohibiting discrimination on the basis of race, color, religion, national origin, age or sex.

PUBLIC RECORDS: Upon award recommendation or ten (10) days after opening, whichever is earlier, bids become “public records” and shall be subject to public disclosure consistent with Chapter 119.07(3)(o), Florida Statutes. Bidders must invoke the exemptions to disclosure provided by law in the response to the Bid, and must identify the data or other materials to be protected, and must state the reasons why such exclusion from public disclosure is necessary. Bids may be reviewed at City Hall, 2345 Providence Blvd., Deltona, Florida 32725

ADJUSTMENTS / CHANGES / DEVIATIONS: No adjustments, changes or deviations shall be accepted on any item unless conditions or specifications of a bid expressly so provide. Any other adjustments, changes or deviations shall require prior written approval, and shall be binding ONLY if issued by the City's Finance Department. The Bidder shall bear sole responsibility for any and all costs of claims arising from any adjustments, changes or deviations not properly executed as required herein.

ADDITIONAL GOODS: Products, Materials and Goods not specifically identified in this bid request may be added to any resultant contract upon mutual consent of the contracting parties. The City of Deltona reserves the right to add or delete products or materials of similar nature, within the family of products of Utility Supplies and their commodity codes, to those items requested in this Bid.

DEFAULT PROVISIONS: In the event of default by the bidder, the City of Deltona reserves the right to procure the item(s) bid from other sources and holds the bidder responsible for excess costs incurred as a result.

DELIVERY: All deliveries are to be F.O.B. Destination, City of Deltona, as specified on a Purchase Order.

TERMINATION FOR CAUSE: If the successful Bidder fails to provide the items bid or if deliveries are not made in a timely manner or if the product supplied does not meet the specifications of the items listed in this Invitation to Bid or shall in any manner commit a breach of contract and fails to remedy within five (5) days after notification from the City of Deltona, the City may terminate the contract resulting from this bid without further notice to the successful contractor. Any and all costs or other expenses incurred by the City of Deltona as a direct result of the aforesaid termination shall be the direct liability of the successful contractor. The City of Deltona shall have all remedies available at law or equity. In addition, the City of Deltona may terminate the contract, without cause, upon thirty (30) days notice.

SELLING, TRANSFERRING OR ASSINGING CONTRACTS: No contract awarded under these terms, conditions and specifications shall be sold, transferred or assigned without the written approval of the City of Deltona.

DELIVERY SLIPS AND INVOICE BILLING REQUIREMENTS:

1. Awarded vendor(s) shall insure that all delivery slip shall accompany the items delivered. Delivery slips shall clearly state the purchase order number, date of delivery, carrier method of delivery, total count delivered, item description, quantity delivered and quantity backordered.
2. Awarded vendor(s) shall insure that all invoices clearly state the purchase order number, delivery dates, quantities, item descriptions, the manufacturer's list price per item, the Single fixed percentage discount and the total discounted price of the items sold.
2. Please be advised that the City of Deltona will not prepay for products. Invoices may be submitted upon completion and acceptance of deliverables and will be paid upon submission of a complete invoice to the Department of Finance and Internal Services, 2345 Providence Blvd., Deltona, FL 32725.

QUALIFICATIONS OF BIDDERS: Bids shall only be considered from firms that have been engaged in providing products to those specified herein for a period of not less than five (5) years and who are presently engaged in the sale of these products. Pre-award inspection of the bidder's facility may be made prior to award of the contract. Bidders may be required to demonstrate proof of experience in the management and administration of an organization of the magnitude required for the performance of this contract.

Bids shall only be considered from manufacturers of the products herein or their authorized distributors. The authorized distributor shall be actively engaged in the sale of this type of products. A representative of the City of Deltona may examine such stock and facilities at any time either before award is made or during the life of the contract.

The City of Deltona shall have the right to investigate the financial condition and experience record of each prospective bidder and determine to its satisfaction the competency of each to undertake the project.

EXTRA WORK: The City, without invalidating this AGREEMENT, may order changes in the operation within the general scope of this AGREEMENT consisting of additions, deletions, or other revisions, price and time may be adjusted accordingly. All such changes in the AGREEMENT may be authorized by a written Change Order to the AGREEMENT and may be executed under the applicable conditions of the AGREEMENT. If the contractor plans to make a claim for an increase in the price or any changes in Product, machinery, or service, he/she must submit said change request in writing. This may be forwarded to the City Manager, if necessary, for approval or rejection.

CANCEL AGREEMENT: The City has the right to cancel this AGREEMENT for convenience in accordance with, but not limited to, the terms of default as specified herein. In any of the following events the City at any time hereafter shall have the right to immediately terminate the AGREEMENT.

In the event the contractor fails to keep and perform or shall violate any of the terms, covenants and conditions of the AGREEMENT on its part to be kept and performed, and the contractor shall not have cured or corrected such failure or violation within 10 days after written notice thereof shall have been given to the contractor; or immediately should the violation affect the health, safety and welfare of the contractor's employees, City employees or the public.

In the event the contractor shall, after 3-separate occasions during the term of this AGREEMENT, fail to keep and perform or shall violate any of the terms, covenants and conditions of this AGREEMENT, then the City has the right to terminate this AGREEMENT with no penalties to the City.

If the contractor shall make an assignment for the benefit of creditors, or shall file a petition in bankruptcy or shall be adjudged a bankrupt, or the interest of the contractor under this AGREEMENT shall be levied upon and sold upon execution or shall be operation of law become vested in another person, firm or corporation because of the insolvency of the contractor; or in the event that a receiver or trustee shall be appointed for the contractor or the interest of the contractor under this AGREEMENT.

In the event the contractor shall cease to operate the business awarded herein, or shall vacate or abandon said premises or not service, or if contractor allows his licenses or permits to expire without renewing as required, contract will be declared null and void.

SEVERABILITY: If any term or provision of the resulting AGREEMENT, or the application thereof to any person or circumstances shall, to any extent, be held invalid or unenforceable, to remainder of the AGREEMENT or the application of such terms or provisions, to persons or circumstances other than those as to which it is held invalid or unenforceable, shall not be affected, and every other term and provision of the AGREEMENT shall be deemed valid and enforceable to the extent permitted by law.

CERTIFICATION OF INDEPENDENT PRICE DETERMINATION: By submission of this bid, the Bidder certifies, and in the case of a joint bid each party thereto certifies as to its own organization, that in connection with this procurement:

1. The prices in this bid have been arrived at independently, without consultation, collusion, communication, or agreement for the purpose of restricting competition, as to any matter relating to such prices with any other bidder or with any competitor.

2. Unless otherwise required by law, the prices which have been quoted in this bid have not been knowingly disclosed by the Bidder and will not knowingly be disclosed by the Bidder prior to opening, directly or indirectly to any other Bidder or to any competitor; and,

3. No attempt has been made or will be made by the Bidder to induce any other person or firm to submit or not to submit a bid for the purpose of restricting competition.

4. Bidder agrees that supplies/services furnished regarding this offer, if awarded, shall be covered by the most favorable commercial warranties the Bidder gives to any customer for such supplies services and that rights and remedies provided herein are in addition to and do not limit any rights offered to the City by any other provision of the bid award.

REFERENCES: Bidder must submit with the bid, three (3) references (form attached) for projects of similar scope to include: Point of contact and telephone number. Failure to provide this information with the bid may result in bid being declared non-responsive.

DETERMINATION OF AWARD: In order to meet the needs and to serve the best interest of the City of Deltona, award will be made to a responsive and responsible bidder who offers the lowest single fixed price and comply with all the specifications, terms and conditions of this bid. The City of Deltona reserves the right to reject any or all bids and subject to the restrictions herein stated. The City of Deltona may review and consider experience and past performance in its award. The City of Deltona reserves the right to accept all or any part of the bid. The City also reserves the right to waive any informality in any bid. The City reserves the right to reject all bids, and to re-advertise for bids. Award may be made by manufacturer / brand or as may be deemed in the best interests of the City of Deltona.

SUBMITTALS: All submittals are REQUIRED and shall be submitted with the bid package at the time of the bid opening to be considered a responsive bidder. Faxed or Electronically submitted Bids shall not be accepted. Bidding companies shall submit five (5) COMPLETE SETS (one [1] original, three [3] copies and one [1] electronic copy (CD)) of the Bid submittal with all supporting documentation. Bidders shall submit a detailed statement of explanation for each item where the product deviates from the specifications requested in this bid. Failure to comply may be cause for rejection

- Questions regarding this bid are to be addressed IN WRITING to:

  Kate Krauss, CPPO, CPPB, SPSM
  Purchasing Manager
  255 Enterprise Road.
  Deltona, FL 32725
  E-Mail Address: kkrauss@deltonafl.gov
  Or Fax: (386) 878-8571

The City of Deltona further reserves the right to be the final judge of what is considered equal and hold the bid open for a 90-day period if award is not made on the date specified.

CONTACT: All prospective proposers are hereby instructed not to contact any member of the City of Deltona Commission, City Manager, or City of Deltona Staff members or Engineers contracted by the City of Deltona, other than the noted contact person OR a member of the Purchasing staff regarding this Item for Bid or their response at any time during the BID process. Any such contact shall be cause for rejection of your submittal.

NO BID: If not submitting a bid, respond by returning only the Statement of No Bid, and give the reason in the space provided.

ANY AND ALL SPECIAL TERMS AND CONDITIONS, TECHNICAL REQUIREMENTS, SCOPE OF WORK OR SPECIFICATIONS ATTACHED HERETO WHICH VARY FROM THESE GENERAL CONDITIONS SHALL HAVE PRECEDENCE.

BIDDER'S CONTACT AND INFORMATION FORM
(SECTION 00110)

<table>
<tr><td>Bidder (Company) Name:</td><td>F. E. I. N. or SS Number:</td></tr>
<tr><td>Mailing Address:</td><td>Street Address:</td></tr>
<tr><td>City, State, Zip:</td><td>City, State, Zip:</td></tr>
<tr><td>Type of Entity: (Circle one)
Corporation Partnership Proprietorship
Joint Venture</td><td rowspan="2">I hereby certify that this bid is made without prior understanding, agreement, or connection with any corporation, firm, or person submitting a bid for the same materials, supplies or equipment, and is in all respects fair and without collusion or fraud. I agree to abide by all conditions of this bid and certify that I am authorized to sign this bid for the Bidder.

X _____
Authorized Signature (Manual)

Typed or Printed Name:</td></tr>
<tr><td>Incorporated in the State of: Year:</td></tr>
<tr><td>Telephone Number: ( )</td><td>Title:</td></tr>
<tr><td colspan="2">Fax Number: ( )</td></tr>
<tr><td colspan="2">Email contact info:</td></tr>
</table>

SECTION 00300

BID RESPONSE FORM

Proposal of _____, hereinafter called "Bidder", a _____ doing business as _____ to the City of Deltona, Florida hereafter called "Owner". The Bidder, in compliance with the Owner's invitation for bids for the construction of:

City of Deltona

ITB #PW-13-06

TIPTON DRIVE IMPROVEMENTS

having examined the plans and specifications with related documents and the site of the proposed work, and being familiar with all of the conditions surrounding the construction of the proposed project including the availability of materials and labor, hereby proposes to furnish all labor, materials, and supplies; and to construct the project in accordance with the Contract Documents, within the time set forth herein, and at the prices stated below. These prices are to cover all expenses incurred in performing the work required under the Contract Documents, of which this proposal is a part.

Bidder accepts all of the terms and conditions of the Advertisement for Bids and General Conditions, Instructions, and Information for Bidders.

Bidder hereby agrees to commence work under contract on or before a date to be specified in a written "Notice to Proceed" of the Owner and to substantially complete the Project within 120 consecutive calendar days and to fully complete the Project within 150 consecutive calendar days thereafter as stipulated in the specifications. Bidder further agrees to pay any liquidated damages, as specified in the Agreement, for each consecutive calendar day thereafter.

Bidder has examined and carefully studied the Bidding Documents and the following addendum receipt of which is hereby acknowledged:

No. _____	Dated: _____	No. _____	Dated: _____
No. _____	Dated: _____	No. _____	Dated: _____
No. _____	Dated: _____	No. _____	Dated: _____
No. _____	Dated: _____	No. _____	Dated: _____

BASE PROPOSAL: Bidder agrees to perform all of the work described in the specifications and shown on the plans for the sum shown in the schedule below:

Item No.	Description	Qty	Unit	Unit Price	Total Price
General Administrative					
1	Mobilization/Demobilization	1	LS	$	$
2	General Requirements, Bonds, Permits, etc.	1	LS	$	$
3	Indemnification	1	LS	$	$
4	Testing Allowance (Roadway and Pipe Compaction)	1	LS	$	$
Stormwater Sitework					
5	Layout and As-Built Survey	1	LS	$	$
6	Temporary Erosion Protection	1	LS	$	$
7	Maintenance of Traffic	1	LS	$	$
8	Clearing and Grubbing	1	LS	$	$
9	Site Grading	1	LS	$	$
10	Remove and Dispose Existing Drainage Inlets	4	EA	$	$
11	Remove and Dispose Existing Drainage Culverts	225	LF	$	$
12	Remove and Replace Driveway	90	SY	$	$
13	Remove and Replace Pavement	550	SY	$	$
14	Furnish and Install 14" x 23" Elliptical RCP	55	LF	$	$
15	Furnish and Install 18" Reinforced Concrete Pipe	55	LF	$	$
16	Furnish and Install 36" Reinforced Concrete Pipe (<10-ft depth)	775	LF	$	$
17	Furnish and Install 36" Reinforced Concrete Pipe (>10-ft depth)	275	LF	$	$
18	Type "C" Inlet	3	EA	$	$
19	Type "D" Inlet - 6-ft Alternate B	2	EA	$	$
20	Type "J" Manhole - 6-ft Alternate A (<10-ft depth)	2	EA	$	$
21	Type "J" Manhole - 6-ft Alternate A (>10-ft depth)	2	EA	$	$
22	Modified Type "H" Outfall Structure	1	EA	$	$
23	Furnish and Install 36" Headwall	1	EA	$	$
24	Furnish and Install Rip Rap	110	SY	$	$
Water Main Conflict					
25	45º Bend (FLG.)	4	EA	$	$
26	Furnish and Install PVC C900 Pipe (restrained joint)	35	LF	$	$
27	Remove and Replace Pavement Related to Water Main Conflict	40	SY	$	$
			TOTAL BASE BID	**$**	

TOTAL BASE BID IN WORDS:

_____DOLLARS AND ____/100 CENTS

The unit prices provided above shall include all labor, materials, bailing, shoring, removal, overhead, profit, insurance, etc., to cover the finished work of the several kinds required. Any changes to the Work after issuance of the Notice of Award shall be processed in accordance with Articles 10, 11, and 12 of the General Conditions (Section 00700) and Article 5 of the Agreement with the Owner.

Bidder understands that the Owner reserves the right to reject any or all bids and to waive any informalities in the bidding.

A bid security, attached in the sum of five (5) percent of the Total Bid Amount, is to become the property of the Owner in the event contract and bond are not executed within thirty (30) days of the Owner issuing a Notice of Award, as liquidated damages for the delay and additional expense to the Owner caused thereby.

Respectfully submitted:

By: _____
(Business Name)

(SEAL - if bid is by corporation)

_____
(Business Address)

_____
(Business City, State, Zip Code)

_____
(Signature)

_____
(Printed Name)

_____
(Title)

SCHEDULE OF BASE BID MANUFACTURERS/SUPPLIERS
(SECTION 300A)

The Contract Documents are based upon the equipment or products available from the manufacturers/suppliers denoted as "A", "B", etc. However, the Bidder must indicate in his Bid which Base Bid manufacturer/supplier he intends to use for each item of equipment listed by circling one (1) of the listed manufacturers/suppliers. Should the Bidder fail to circle a named supplier, he hereby agrees to provide the item listed as "A". After receipt of bids, the Bidder may not substitute for any manufacturer or supplier circled. Listed manufacturers/suppliers identified as deductive alternates will be considered as a deductive alternate as presented in the Deductive Alternate Section of the Bid Form.

If the Bidder desires to propose one (1) or more substitution or "or equal" manufacturers/suppliers, he may write in the name of such substitution or "or equal" in the spaces provided on the pages following the lists, but he must, nevertheless, also circle one of the listed manufacturers/suppliers. All substitutions or "or equal" items must be identified at the time of Bid (see paragraph 6.7 of the General Conditions as amended by the Supplementary Conditions). Substitutions or "or equal" items will **not** be considered when determining the Apparent Lowest Bidder. Substitutions or "or equal" items will **not** be evaluated or considered until after the "Effective Date" of the Agreement. The Bidder shall base his Bid on providing one of the listed manufacturers/suppliers and shall assume for bidding purposes that all substitutions or "or equal" items will not be accepted.

If the proposed substitution or "or equal" manufacturer/supplier is determined "not equivalent" by the Engineer, the Bidder must use the circled manufacturer/supplier. If the Bidder fails to indicate which listed manufacturer/supplier he intends to use or if a substitution or an "or equal" is rejected, he must use the manufacturer/supplier listed as "A". Also, if the Bidder circles more than one listed manufacturer/supplier, he must use the first manufacturer/supplier circled (unless a substitution or "or equal" is approved).

Each proposed substitution or "or equal" will be evaluated in accordance with Paragraph 6.7 of the General Conditions as amended by the Supplementary Conditions following the Effective Date of the Agreement.

In addition to the reimbursement required under Paragraph 6.7 of the General Conditions, the Contractor shall also reimburse the Owner for any engineering costs directly attributable to the change in manufacturers/suppliers, caused by the acceptance of proposed substitution or "or equal" items, such as; additional field trips for the Engineer, additional redesign costs, and additional review costs, etc. Other costs directly attributable to the change in manufacturers/suppliers caused by the acceptance of proposed substitution or "or equal" items such as increased electrical requirements, larger building, modifications to structures, additional pumps, piping or tankage, etc., shall be borne by others and not by the Owner. Bidder further agrees that the use of substitute equipment offered will not affect the completion date.

The Owner may request, and the Bidder shall supply, complete information on proposed substitution or "or equal" items prior to the Notice of Award.

Category I - **SCHEDULE OF BASE BID MANUFACTURERS / SUPPLIERS (SECTION 300A)**

Item No.	Equipment Item or Material	Specification Section No.	Manufacturer/Supplier
1.			
2.			
3.			
4.			
5.			
6.			
7.			

SUBSTITUTION LIST OF MANUFACTURERS / SUPPLIERS
(SECTION 00300B)

Bidder proposes the following substitutions and "or equal" items of alternate manufacturers/suppliers for the equipment of material categories so identified:

	Equipment Item Material	Drawing No.	Spec. Section	Substitute/"or equal" Manufacturer/Supplier (List One Only)	Proposed Price Deduct
1.					
2.					
3.					
4.					
5.					
6.					
7.					
9.					
10.					

SUBSTITUTIONS AND "OR EQUAL"

The above signed as Bidder agrees that substitutions or "or equal" items will not be considered until after the "Effective Date of the Agreement" and will be evaluated in accordance with Paragraphs 6.7, 6.7.1 and 6.7.2, of the General Conditions as amended by the Supplementary Conditions. If Bidder intends to propose substitutions or "or equal" items after the "Effective Date of the Agreement", it is agreed that these items will be listed on the Substitution List included with the Bid (form provided herein). Only the proposed substitutions or "or equal" items listed on the Substitution List will be evaluated by the Engineer in accordance with the General Conditions.

QUESTIONNAIRE FORM
(SECTION 00301)

DATE:_____

PROJECT IDENTIFICATION **City of Deltona – Public Works Division**
TIPTON DRIVE IMPROVEMENTS

NAME OF BIDDER: _____

BUSINESS ADDRESS: _____

TELEPHONE NO: _____

CONTRACTOR'S FLORIDA LICENSE NO: _____

The signed bidder warrants the truth and accuracy of all statements and answers herein contained. Include additional sheets if necessary.

1. How many years has your organization been in business as a General Contractor? _____

2. Have you ever failed to complete work awarded to you? If so, where and why?
_____
_____

3. Name three (3) municipalities or government entities for which you have performed similar projects as this one and to which you refer?
_____
_____
_____

4. Have you personally inspected the site of the proposed Work? Describe any anticipate problems with the site and your proposed solutions.
_____
_____
_____

5. Will you Subcontract any part of this Work? If so, describe which portion(s).
_____
_____
_____
_____

6. What equipment do you own that is available for the Work? (attach additional sheets if necessary)

_____

_____

7. What equipment will you purchase for the Work?

_____

_____

8. What equipment will you rent for the Work?

_____

_____

9. The following is given as a summary of the Financial Statement of the undersigned: (List Assets and Liabilities and use insert sheet if necessary.)

_____

_____

_____

_____

_____

_____

_____

_____

10. State the true and exact, correct, and complete name under which you do business.
Bidder is: _____

SUB-CONTRACTORS AND AFFILIATES FORM
(SECTION 00301A)

The following are a list of Sub Contractors or Affiliates that will be utilized in this project. Use additional sheets if necessary.

1. **Firm Name:** _____
   Trade: _____
   Firm Owner: _____
   Firm Address: _____
   Firm Phone Number: _____

2. **Firm Name:** _____
   Trade: _____
   Firm Owner: _____
   Firm Address: _____
   Firm Phone Number: _____

3. **Firm Name:** _____
   Trade: _____
   Firm Owner: _____
   Firm Address: _____
   Firm Phone Number: _____

4. **Firm Name:** _____
   Trade: _____
   Firm Owner: _____
   Firm Address: _____
   Firm Phone Number: _____

5. **Firm Name:** _____
   Trade: _____
   Firm Owner: _____
   Firm Address: _____
   Firm Phone Number: _____

REFERENCES FORM
(SECTION 00301B)

The City of Deltona is seeking Contractors who have proven past, positive experiences in projects of similar and same size of scope of work. These references are required with your submittals. References shall contain the Owners contact information for the projects referenced. References with another Contractor listed as the Owner shall not be accepted. Contractors not having past, positive experiences in projects of similar and same size of scope of work, as the Prime Contractor, will not be considered. References which are located in foreign countries are not acceptable.

1. **Project Name:** _____

Project Value: _____

Project Description: _____

Project Owner: _____

Owner contact information: _____

Project Location: _____

Project Start and End Dates: _____

2. **Project Name:** _____

Project Value: _____

Project Description: _____

Project Owner: _____

Owner contact information: _____

Project Location: _____

Project Start and End Dates: _____

3. **Project Name:** _____

Project Value: _____

Project Description: _____

Project Owner: _____

Owner contact information: _____

Project Location: _____

Project Start and End Dates: _____

4. **Project Name:** _____

Project Value: _____

Project Description: _____

Project Owner: _____

Owner contact information: _____

Project Location: _____

Project Start and End Dates: _____

REFERENCES FORM
(SECTION 00301B CONTINUED)

5. **Project Name:** _____

Project Value: _____

Project Description: _____

Project Owner: _____

Owner contact information: _____

Project Location: _____

Project Start and End Dates: _____

6. **Project Name:** _____

Project Value: _____

Project Description: _____

Project Owner: _____

Owner contact information: _____

Project Location: _____

Project Start and End Dates: _____

7. **Project Name:** _____

Project Value: _____

Project Description: _____

Project Owner: _____

Owner contact information: _____

Project Location: _____

Project Start and End Dates: _____

8. **Project Name:** _____

Project Value: _____

Project Description: _____

Project Owner: _____

Owner contact information: _____

Project Location: _____

Project Start and End Dates: _____

BID BOND FORM
(SECTION 00410)

KNOWN ALL MEN BY THESE PRESENTS, that we, the undersigned, _____ as Principal, and _____ as Surety, are hereby held and firmly bound unto the City of Deltona, Florida as Owner in the penal sum of, (five percent 5%) of the Contract Bid _____ for the payment of which, well and truly to be made, we hereby and severally bind ourselves, successors and assigns to pay Owner upon default of Bidder the penal sum set forth on the face of this Bond. Signed, this _____ day of _____, 20____.

The condition of the above obligation is such that whereas the Principal has submitted to the City of Deltona, Florida a certain bid, attached hereto and hereby made a part hereof, to enter into a contract in writing, for the **TIPTON DRIVE IMPROVEMENTS.**

NOW THEREFORE,

1. Default of Bidder shall occur upon the failure of Bidder to deliver within the time required by the Bidding Documents the executed Agreement required by the Bidding Documents and any performance and payment bonds required by the Bidding Documents and Contract Documents.

2. This obligation shall be null and void if:

   2.1 Owner accepts Bidder's bid and Bidder delivers within the time required by the Bidding Documents (or an extension thereof agreed to in writing by Owner) the executed Agreement required by the Bidding Documents and any performance and payment bonds required by the Bidding Documents and Contract Documents, or

   2.2 All bids are rejected by Owner, or

   2.3 Owner fails to issue a notice of award to Bidder within the time specified in the Bidding Documents (or any extension thereof agreed to in writing by Bidder and, if applicable, consented to by Surety when required by paragraph 5 hereof).

3. Payment under this Bond will be due and Payable upon default of Bidder and within thirty (30) calendar days after receipt of Bidder and surety of written notice of default from Owner which notice will be given with reasonable promptness, identifying this Bond and the Project and including a statement of the amount due.

4. Surety waives notice of any and all defenses based on or arising out of any time extension to issue notice of award agreed to in writing by Owner and Bidder, providing that the time for issuing notice of award including extensions shall not in the aggregate exceed one hundred twenty (120) days from Bid Due without Surety's written consent.

5. No suite or action shall be commenced under this Bond prior to thirty (30) calendar days after the notice of default required in paragraph 3 above is received by Bidder and Surety, and in no case later than one year after Bid Due Date.

6. Any suite or action under this Bond shall be commenced only in a court of competent jurisdiction located in the state in which the Project is located.

7. Notice required hereunder shall be in writing and sent to Bidder and Surety at their respective addresses shown on the face of this Bond. Such notices may be sent by personal delivery, commercial courier or by United States Registered or Certified Mail, return receipt requested, postage pre-paid, and shall be deemed to be effective upon receipt by the part concerned.

8. Surety shall cause to be attached to this Bond a current and effective Power of Attorney evidencing the authority of the officer, agent or representative who executed this Bond on behalf of Surety to execute, seal and deliver such Bond and bind the Surety thereby.

9. This bond is intended to conform to all applicable statutory requirements. Any applicable requirement of any applicable statute that has been omitted from this Bond shall be deemed to be included herein as if set forth at length. If any provision of the Bond conflicts with any applicable provision of any applicable statute, then the provision of said statute shall govern and the remainder of the Bond that is not in conflict therewith shall continue in full force and effect.

10. The term "bid' as used herein includes a bid, offer or proposal as applicable.

IN WITNESS WHEREOF, the Principal and the Surety have hereunto set their hands and seals, and such of them as are corporations have caused their corporate seals to be hereto affixed and these presents to be signed by their proper officers, the day and year first set forth above.

Principal (Print Full Name):

_____

By:_____ (LS)

Title:_____

Attest:_____
Signature and Title

Surety (Print Full Name):

_____ (Seal)
Surety's Name and Corporate Seal

By:_____
Signature (attach power of attorney)

Title:_____

Attest:_____
Signature and Title

_____
(DATE)

IMPORTANT – Surety companies executing bonds must appear on the Treasury Department's most current list (Circular 570 as amended) and be authorized to transact business in the State of Florida.

CORPORATE RESOLUTION FORM
(SECTION 00420)

I, _____, Secretary of _____, a corporation organized and existing under the laws of the State of _____, hereby certify that at a meeting of the Board of Directors of the Corporation duly called and held on _____, 20___ at which a quorum was present and acting throughout, the following resolutions were adopted and are now in full force effect:

RESOLVED that the following individuals of this corporation are authorized to execute on behalf of this corporation A Bid and Agreement to _____ for the construction of _____ _____.

I further certify that the names of the officers of this corporation and any other persons authorized to act under this resolution and their official signatures are as follows:

NAME	OFFICE	OFFICIAL SIGNATURE
_____	_____	_____
_____	_____	_____
_____	_____	_____
_____	_____	_____

IN WITNESS THEREOF, I have hereunto subscribed my name as Secretary and affixed the seal of the corporation this _____ day of _____, 20 _____

HOLD HARMLESS AND INDEMNITY AGREEMENT
(SECTION 00430)

_____, agrees through the signing of this document by an authorized party or agent that it shall defend, indemnify and hold harmless the City of Deltona, and its agents, employees, and public officials from and against all suits, losses, claims, demands, judgments of every name and description arising out of or incidental to the performance of this contract or work performed thereunder, whether or not due to or caused by the negligence of the City of Deltona, its agents, employees, and public officials excluding only the sole negligence of the City of Deltona, its agents, employees, and Public Officials.

This provision shall also pertain to any claims brought against the City of Deltona, its agents, employees, and public officials by an employee of the named Contractor, any Sub-contractor, or anyone directly or indirectly employed by any of them.

The Contractor's obligation to indemnify the City of Deltona, its agents, employees and public officials under this provision shall be limited to $1,000,000 per occurrence which the parties agree bears a reasonable commercial relationship to the contract.

The Contractor agrees to accept, and acknowledges as adequate remunerations, the consideration of $10, which is part of the agreed bid price, the promises contained herein, and other good and valuable consideration, the receipt of which is hereby acknowledged, for agreement to enter into this Hold Harmless and Indemnity Agreement.

_____
CONTRACTOR

_____
DATE

DRUG-FREE WORKPLACE FORM
(SECTION 00440)

The undersigned Bidder in accordance with Florida Statute 287.087, hereby certifies that

_____ does:
(*Name of Business*)

1. Publish a statement notifying employees that the unlawful manufacture, distribution, dispensing, possession, or use of a controlled substance is prohibited in the workplace and specifying the actions that will be taken against employees for violations of such prohibition.

2. Inform employees about the dangers of drug abuse in the workplace, the business's policy of maintaining a drug-free workplace, any available drug counseling, rehabilitation, and employee assistance programs, and the penalties that may be imposed upon employees for drug abuse violations.

3. Give each employee engaged in providing the commodities or contractual services that are proposed a copy of the statement specified in subsection (1).

4. In the statement specified in subsection (1), notify the employees that, as a condition of working on the commodities or contractual services that are under bid, the employee will abide by the terms of the statement and will notify the employer of any conviction of, or plea of guilty or nolo contendere to, any violation of Chapter 893 or of any controlled substance law of the United States or any state, for a violation occurring in the workplace no later than five (5) days after such conviction.

5. Impose a sanction on, or require the satisfactory participation in a drug abuse assistance or rehabilitation program if such is available in the employee's community, by any employee who is so convicted.

6. Make a good faith effort to continue to maintain a drug-free workplace through implementation of this section.

As the person authorized to sign the statement, I certify that this firm complies fully with the above requirements.

X _____
Bidder's Signature

_____
Date

PROPOSER'S CERTIFICATION FORM
(SECTION 00460)

I have carefully examined the Request for Proposal, Instructions to Proposers, General and/or Special Conditions, Vendor's Notes, Specifications, proposed agreement and any other documents accompanying or made a part of this Request for Proposal.

I hereby propose to furnish the goods or services specified in the Request for Proposal at the prices and rates quoted in my Proposal. I agree that my Proposal will remain firm for a period of up to one hundred twenty (120) days in order to allow the City adequate time to evaluate the Proposal.

I agree to abide by all conditions of the Proposal and understand that a background investigation may be conducted by the City of Deltona prior to award.

I certify that all information contained in this Proposal is truthful to the best of my knowledge and belief. I further certify that I am a duly authorized to submit this Proposal on behalf of the vendor / contractor as its act and deed and that the vendor / contractor is ready, willing and able to perform if awarded the contract.

I further certify, under oath, that this Proposal is made without prior understanding, agreement, connection, discussion, or collusion with any other person, firm or corporation submitting a Proposal for the same product or service; no officer, employee or agent of the City of Deltona Government or of any other Proposer interested in said Proposal; and that the undersigned executed this Proposer's Certification with full knowledge and understanding of the matters therein contained and was duly authorized to do so.

Name of Business

By:
_____
Signature

_____
Name & Title, Typed or Printed

_____
Mailing Address

_____
City, State, Zip Code

(____)_____
Telephone Number

Sworn to and subscribed before me

This _____ day of

_____, 20___

_____
Signature of Notary

Notary Public, State of _____

Personally known
-OR-
Produced Identification _____

SWORN STATEMENT UNDER SECTION 287.133(3)(A), FLORIDA STATUTES, ON PUBLIC ENTITY CRIMES (SECTION 00470)

THIS FORM MUST BE SIGNED IN THE PRESENCE OF A NOTARY PUBLIC OR OTHER OFFICER AUTHORIZED TO ADMINISTER OATHS.

This sworn statement is submitted to the City of Deltona by _____
(Individual's name and title)

For _____
(Name of entity submitting sworn statement)

Whose business address is _____

_____

And (if applicable) its Federal Employer Identification Number (FEIN) is _____
(if the entity has no FEIN, include the Social Security Number of the individual signing this sworn statement)

1. I understand that a "public entity crime" as defined in Section 287.133(1)(g), Florida Statutes, means a violation of any State or Federal law by a person with respect to and directly related to the transaction of business with any public entity or with an agency or political subdivision of any other state or with the United States, including, but not limited to, any bid or contract for goods or services to be provided to any public entity or an agency or political subdivision of any other state or a of the United States and involving antitrust, fraud, theft, bribery, collusion, racketeering, conspiracy, or material misrepresentation.

11. I understand that "convicted" or "conviction" as defined in Paragraph 287.133(1)(b), Florida Statutes, means a finding of guilt or a conviction of a public entity crimes, with or without an adjudication of guilt, in any Federal or State trial court of record relating to charges brought by indictment or information after July 1, 1989, as a result of a jury verdict, non-jury trial, or entry of a plea of guilty or nolo contendere.

12. I understand that an "affiliate' as defined in Section 287.133(1)(a), Florida Statutes, means:

    A predecessor or successor of a person convicted of a public entity crime: or an entity under the control of any natural person who is active in the management of the entity and how has been convicted of a public entity crime. The term "affiliate" includes those officers, directors, executives, partners, shareholders, employees, members, and agents who are active in the management of an affiliate. The ownership by one (1) person of shares constituting a controlling interest in another person, or a pooling of equipment or income among persons when not for fair market value under an arm's length agreement, shall be a prima facie case that one person controls another person. A person who knowingly enters into a joint venture with a person who has been convicted of a public entity crime in Florida during the preceding thirty-six (36) months shall be considered an affiliate.

13. I understand that a "person" as defined in Section 287.133(1)(e), Florida Statutes, means any natural person or entity organized under the laws of any state or of the United States with the legal power to enter into a binding contract and which bids or applies to bid on contracts for the provision of goods or services let by a public entity, or which otherwise transacts or applies to transact business with a public entity. The term "person" includes those officers, directors, executives, partners, shareholders employees, members, and agents who are active in management of an entity.

14. Based on information and belief, the statement which I have marked below is true in relation to the entity submitting this sworn statement. (You must indicate which statement applies.)

(SECTION 00470 Continued)

_____ Neither the entity submitting this sworn statement, nor any officers, directors, executives, partners, shareholders, employees, members, or agent who is active in management of the entity, nor the affiliate of the entity has been charged with and convicted of a public entity crime subsequent to July 1, 1989.

_____ The entity submitting this sworn statement, or one or more of the officers, directors, executives, partners, shareholders, employees, members or agent who are active in management of the entity, or an affiliate of the entity, has been charged with and convicted of a public entity crime subsequent to July 1, 1989.

_____ The entity submitting this sworn statement, or one or more of the officers, directors, executives, partners, shareholders, employees, members or agents who are active in management of the entity, or an affiliate of the entity, has been charged with and convicted of a public entity crime subsequent to July 1, 1989. However, there has been a subsequent proceeding before an Administrative Law Jury of the State of Florida, Division of Administrative Hearings and the Final Order entered by the Administrative Law Jury determined that it was not in the public interest to place the entity submitting this sworn statement on the convicted vendor list. (You must attach a copy of the final order).

I UNDERSTAND THAT THE SUBMISSION OF THIS FORM TO THE CITY OF DELTONA IS FOR THE CITY ONLY AND, THAT THIS FORM IS VALID THROUGH DECEMBER 31, OF THE CALENDAR YEAR IN WHICH IT IS FILED. I ALSO UNDERSTAND THAT I AM REQUIRED TO INFORM THE CITY PRIOR TO ENTERING IN TO A CONTRACT IN EXCESS OF THE THRESHOLD AMOUNT PROVIDED IN SECTION 287.017, FLORIDA STATUTES, FOR CATEGORY TWO OF ANY CHANGE IN THE INFORMATION CONTAINED IN THIS FORM.

_____
SIGNATURE

_____
DATE

State of _____
County of _____

Personally appeared before me, the undersigned authority, _____(name of individual signing) who, after first being sworn by me, affixed his/her signature in the space provided above on the ____ day of _____, 20 ___.

_____
NOTARY PUBLIC

My commission expires:

NON COLLUSION AFFIDAVIT FORM
(SECTION 00480)

STATE OF FLORIDA

COUNTY OF VOLUSIA

_____, being first duly sworn deposes and says that:

i. He/She is the _____, of _____, the Bidder that has submitted the attached Bid;

ii. He/She is fully informed respecting the preparation and contents of the attached Bid and of all pertinent circumstances respecting such Bid;

iii. Such Bid is genuine and is not a collusive or sham Bid;

iv. Neither the said Bidder nor any of its officers, partners, owners, agents, representatives, employees, or parties in interest, including this affidavit, have in any way, colluded, conspired, connived or agreed, directly or indirectly, with any other Bidder, firm or person to submit a collusive or sham Bid in connection with the Contract for which the attached Bid has been submitted; or to refrain from bidding in connection with such Contract; or have in any manner, directly or indirectly, sought by agreement or collusion,, or communication, or conference with any Bidder, firm, or person to fix the price or prices in the attached Bid or of any other Bidder, or to fix any overhead, profit, or cost elements of the Bid price or the Bid price of any other Bidder, or to secure through any collusion, conspiracy, connivance, or unlawful agreement any advantage against (Recipient), or any person interested in the proposed Contract;

v. The price or prices quoted in the attached Bid are fair and proper and are not tainted by any collusion, conspiracy, connivance, or unlawful agreement on the part of the Bidder or any other of its agents, representatives, owners, employees or parties in interest, including this affidavit.

By _____

Sworn and subscribed to before me this ____ day of _____, 20___, in the State of _____, County of _____.

_____ Notary Public

My Commission expires:

TRENCH SAFETY AFFIDAVIT FORM
(SECTION 00490)

(FAILURE TO COMPLETE THIS FORM MAY RESULT IN THE BID BEING DECLARED NON-RESPONSIVE)

_____ (NAME OF CONTRACTOR) hereby provides written assurance that compliance with applicable Trench Safety Standards identified in the Occupational Safety & Health Administration's Excavation Safety Standards (OSHA) 29 C.F.R.S. 1926.650 Subpart P will be adhered to during trench excavation in accordance with Florida Statutes 553.60 through 533.64 inclusive (1990) "Trench Safety Act".

The specific methods of compliance with applicable Trench Safety Standards, and the associated cost of compliance (costs included in the Bid Price), are as follows (attach additional sheets if necessary):

Item and Safety Measure	Cost
_____	$ _____
_____	$ _____
_____	$ _____
_____	$ _____
_____	$ _____
_____	$ _____
_____	$ _____
TOTAL	$ _____

By the signature of its undersigned authorized representatives, the Bidder hereby assures the CITY OF DELTONA that any such excavation performed by the Bidder will be performed in compliance with all applicable trench safety standards.

By _____

Sworn and subscribed to before me this ____ day of _____, 20____, in the State of _____, County of _____.

_____ Notary Public

My Commission expires:

SAMPLE CONTRACT (FOR INFORMATION PURPOSES ONLY)

SECTION 00500

AGREEMENT BETWEEN CITY OF DELTONA AND
{CONTRACTOR}
PER ITB NO. {#}

THIS AGREEMENT is made and entered into this ____ day of _____, 2011 by and between the CITY OF DELTONA, a municipality of the State of Florida, whose address is 2345 Providence Boulevard, Deltona, Florida 32725, hereinafter called the "City" and {NAME OF COMPANY}, duly authorized to conduct business in the State of Florida, whose principal address is {ADDRESS}, hereinafter called the "Contractor".

WHEREAS, the City desires to obtain services related to {PROJECT/PURPOSE} per ITB No. {#}. The work generally involves all work as described in the ITB documents, specifications, drawings and any addendum issued for this project.

WHEREAS, the City requested and received expressions of interest from several companies to provide these services; and

WHEREAS, Contractor is competent and qualified to furnish said services to the City and desires to provide its services for this project, and

WHEREAS, the Commission of the City of Deltona has approved award of this agreement on {DATE}.

NOW, THEREFORE, IN CONSIDERATION of the mutual terms, understandings, conditions, premises, covenants and payment hereinafter set forth, and intending to be legally bound, the parties hereby agree as follows:

Article 1. Recitals

The foregoing recitals are true and correct and incorporated herein by reference.

Article 2. Scope of Services

2.1 Pursuant to the terms and conditions set forth in this Agreement, City hereby engages Contractor to perform services related to {PROJECT/PURPOSE} per ITB No. {#}, attached hereto and incorporated herein by reference, and Contractor's Proposal dated {DATE}.

2.2 The services, as described in ITB No. {#}, to be rendered by the Contractor, shall commence upon issuance of a Notice to Proceed and be completed within {#} days.

2.3 City and Contractor recognize that time is of the essence of this Agreement and that City will suffer financial loss if the Work is not completed within the times specified above. They also recognize the delays,

expense and difficulties in proving the actual loss suffered by City if the Work is not completed on time. Accordingly, instead of requiring any such proof, City and Contractor agree that as liquidated damages for delay (but not as a penalty), Contractor shall pay the City one thousand dollars ($1,000.00) for each day that goes beyond the agreed upon completion date as stated on the Notice to Proceed. This amount represents an estimate of City's damages for loss of use and administrative costs associated with the delay.

2.4 The services to be rendered by the Contractor shall include all labor, materials, equipment and incidentals necessary to perform all work indicated and specified in the ITB documents.

2.5 Contractor has familiarized itself with the nature and extent of the contract documents, work, site, locality, and all local conditions and laws and regulations that in any manner may affect cost, progress, performance or furnishing of the work.

2.6 Contractor has obtained and carefully studied (or assumes responsibility for obtaining and carefully studying) all examinations, investigations, explorations, tests, reports and studies which pertain to the subsurface or physical conditions at or contiguous to the site or otherwise may affect the cost, progress, performance or furnishing of the work as Contractor considers necessary for the performance or furnishing of the work at the contract price, within the contract time and in accordance with the other terms and conditions of the contract documents and no additional examinations, investigations, explorations, tests, reports, studies or similar information or data are or will be required by Contractor for such purposes.

2.7 Contractor acknowledges that nothing herein shall be deemed to preclude the City from retaining the services of other persons or entities undertaking the same or similar services as those undertaken by the Contractor or from independently developing or acquiring materials or programs that are similar to or competitive with, the services provided under this Agreement.

2.8 Contractor shall be responsible for obtaining all required federal, state or local permits required to complete the scope of work under this agreement.

2.9 Contractor shall be responsible for the quality of work performed. Contractor shall, without additional compensation, correct or revise any errors or deficiencies in his services.

2.10 Contractor agrees to provide a one year maintenance period to correct any defective work that may be found within the one year period from the time of completion.

Article 3. Payment

3.1 The City agrees to compensate Contractor for work performed, completed and accepted by the City's representative for services provided for this project at a total cost not to exceed AMOUNT dollars and 00/100 ($0.00). Fees for any additional work needed will be agreed upon in writing prior to any service being completed.

3.2 Invoices shall be submitted in duplicate to the City of Deltona, Accounts Payable, 2345 Providence Blvd., Deltona, FL 32725. Each invoice shall contain the purchase order number and a detailed description of services and fees.

3.3 The City shall make payment on all invoices in accordance with the Florida Prompt Payment Act, sections 218.70 through 218.79, Florida Statutes.

3.4 The City shall make progress payments on account of the Contract Price on the basis of Contractor's monthly Applications for Payment, as recommended by the City, which shall be submitted by the Contractor between the first (1st) and the tenth (10th) day after the end of each calendar month for which payment is requested. All progress payments will be made on the basis of the progress of the work completed and accepted by the City.

3.5 Progress payments will be made in an amount equal to the percentage indicated below, but in each case, less the aggregate of payments previously made.

3.5.1. Ninety percent (90%) of the value of work completed, with the balance being retainage.

3.5.2. Upon 50% Completion, a total of ninety-five percent (95%) of the value of work completed, with the balance being retainage.

3.5.3. Final Payment. Upon final completion of the work, City shall pay Contractor an amount sufficient to increase total payments to ninety-eight percent (98%) of the Contract Price. However, not less than two percent (2%) of the Contract Price shall be retained until Contract Closeout is completed.

3.6 The Contractor shall not be entitled to payment for any other expenses, fees, or other costs it may incur at any time and in any connection with its performance hereunder. The Contractor hereby agrees that the total cost is inclusive of all overhead and administrative expenses.

3.7 In the event a specific project is to be funded by state or federal monies, the Contractor hereby agrees to comply with all requirements of the state or federal government applicable to the use of the monies, including receiving no payment until all required forms are completed, submitted, and approved by the City.

Article 4. Special Terms and Conditions

4.1 Qualifications. Firms or individuals shall be registered with the State of Florida and have obtained at least the minimum thresholds of education and professional experience required by Florida Statutes to perform the services contained herein.

4.2 Termination. This Agreement may be terminated by the City upon thirty (30) days advance written notice to the Contractor; but if any work is in progress but not completed as of the date of termination, then this

Agreement may be extended upon written approval of the City until said work is completed by the Contractor and accepted by the City.

A. Upon notification to the Contractor of termination by the City, Contractor will immediately discontinue all services affected unless the notice directs otherwise.

B. Termination for Convenience. In the event this Agreement is terminated or cancelled upon the request and for the convenience of City, City shall reimburse Contractor for actual work satisfactorily completed.

C. Termination for Cause. If the termination of this Agreement is due to the failure of the Contractor to fulfill his contractual obligations, City shall reimburse Contractor for actual work satisfactorily completed, and City may take over the work and prosecute the same to completion by Agreement or otherwise.

D. In the event of termination of this Agreement, all work, reports, and other work product produced by Contractor in connection with the Agreement shall be returned to the City and become and remain the property of the City.

4.3 Assignment. This Agreement may not be assigned or transferred in any manner by Contractor and any such assignment is expressly prohibited. Any attempt to assign this Agreement shall render this Agreement null and void.

4.4 Insurance and Bond. The City of Deltona will purchase Builders' Risk Insurance. Contractor shall provide and maintain, during the entire term of this Agreement, without cost to the City, insurance in the following types and limits with a company or companies authorized to do business in the State of Florida and rated "Class A" or better by A. M. Best or some other form of assurance approved by the City's Risk Manager. Contractor shall not commence work under the Agreement until City has received an acceptable certificate or certificates of insurance evidencing the required insurance, which is as follows:

(A) General Liability insurance on forms no more restrictive than the latest edition of the Commercial General Liability policy (CG 00 01 or CG 00 02) of the Insurance Services Office or equivalent without restrictive endorsements, with the following minimum limits and coverage:

General Liability	
Each Occurrence/General Aggregate	$1,000,000
Products-Completed Operations	$1,000,000
Premises Operation	$1,000,000
Personal & Adv. Injury	$1,000,000
Professional Liability	$1,000,000
Blanket Contractual Liability	$1,000,000
Fire Damage	$50,000
Medical Expense	$5,000

(B) Automobile liability insurance, including owned, non-owned and hired autos with the following minimum limits and coverage:

Combined Single Limit	$5,000,000
Or	
Bodily Injury (per person)	$1,000,000
Bodily Injury (per accident)	$1,000,000
Property Damage	$100,000

(C) Workers' compensation insurance in accordance with Florida Statute, Chapter 440, and/or any other applicable law requiring workers' compensation (Federal, maritime, etc).

(D) Additional Requirements:

(1) **City of Deltona shall be named and endorsed as an additional insured on the General liability policy.**

(2) The General Liability policy is to contain or be endorsed to name the City, its officers, officials and employees as additional insureds as respects to the liability arising out of the activities performed under this Agreement. Such coverage shall be primary to the extent of Contractors negligent acts or omissions or willful misconduct, and shall apply separately to each insured against whom claim is made or suit is brought, except with respect to the limits of the insurer's liability. In addition, a waiver of subrogation by the commercial liability insurer shall be provided that lists or names the additional insured as subject to the waiver.

(3) Certificates of insurance shall provide for a minimum of thirty (30) days prior written notice to the City of any material change or cancellation of the required insurance, with ten (10) day written notice of cancellation due to non-payment of premium.

(4) Certificates of insurance shall identify the Bid number, contract, project, etc. in the Description of Operations section of the Certificate.

(5) Contractor shall be responsible for subcontractors and their insurance.

(6) The Certificate holder section of each policy shall state: City OF DELTONA, 2345 PROVIDENCE BOULEVARD, DELTONA, FLORIDA 32725.

(7) Contractor shall be solely responsible for all deductibles and self-insurance retention on Contractor Liability Insurance policies. All of the policies of insurance so required to be purchased and maintained shall contain a provision or endorsement that the coverage afforded shall not be canceled, materially changed or renewal refused without thirty (30) calendar days written notice, or without ten

(10) days written notice of cancellation due to non-payment of premium, being given to City by certified mail.

(E) A payment and performance bond for 100% of the contract price will be required from the Contractor for this project.

4.5 Indemnity. Contractor shall indemnify and hold City and its agents, officers, commission, or employees harmless for any damages resulting from failure of Contractor to take out and maintain the above insurance. Additionally, Contractor agrees to indemnify, and hold the City, and its officers, commission, employees and agents free and harmless from and against any and all losses, penalties, damages, settlements, costs, charges, professional and attorney fees, court costs, other expenses and liabilities to the extent resulting from the negligent act, error or omission of Contractor, its agents, employees or representative, in the performance of Contractor's duties set forth in this Agreement, including any act alleged to give rise to an action in inverse condemnation.

4.6 Independent Contractor. Contractor agrees that it shall be acting as an independent contractor and shall not be considered or deemed to be an agent, employee, joint venturer, or partner of City. Contractor shall have no authority to contract for or bind City in any manner and shall not represent itself as an agent of City or as otherwise authorized to act for or on behalf of City.

4.7 Ownership of Deliverables.

(a) Title to all work product produced by Contractor pursuant to this Agreement shall be and remain the sole and exclusive property of City when produced. Contractor shall deliver all such original work product to City upon completion thereof unless it is necessary for Contractor, in City's sole discretion to retain possession for a longer period of time.

(b) The documents, reports, and similar materials provided or created by Contractor are public records and Contractor shall abide by applicable requirements of Florida law. Contractor shall notify the City within 24 hours of receiving the request to release the information concerning the subject project to a member of the media and/or to the public. The City's notification shall to the extent possible provide the name, date, time and type of information requested to be released prior to the Contractor's release or disclosure of information to the media or to the public.

4.8 Return of Materials. Upon the request of the City, but in any event upon termination of this Agreement, Contractor shall surrender to the City all memoranda, notes, records, and other documents or materials pertaining to the services hereunder, that were furnished to the Contractor by the City pursuant to this Agreement. Contractor may keep copies of all work products for its records.

4.9 NO CLAIM FOR DAMAGES OR ANY CLAIM OTHER THAN FOR AN EXTENSION OF TIME SHALL BE MADE OR ASSERTED AGAINST THE CITY BY REASON OF ANY DELAYS. No interruption, interference, inefficiency, suspension or delay in the commencement or progress of the work from any cause whatsoever, shall relieve the Contractor of his duty to perform or give rise to any right to damages or

additional compensation from the City. The Contractor expressly acknowledges and agrees that the Contractor shall receive no damages for delay. The Contractor's sole remedy, if any, against the City shall be the right to seek an extension to the contract time.

4.10 Retaining Other Contractors by City. Nothing herein shall be deemed to preclude the City from retaining the services of other persons or entities undertaking the same or similar services as those undertaken by the Contractor or from independently developing or acquiring materials or programs that are similar to or competitive with, the services provided under this Agreement.

4.11 Accuracy. The Contractor is responsible for the professional quality, technical accuracy, timely completion and coordination of all the services furnished hereunder. The Contractor shall, without additional compensation, correct or revise any errors, omissions or other deficiencies in its services.

4.12 Codes and Regulations. All work completed under this Agreement shall at all times comply with all applicable federal, state and local statutes, codes, regulations and ordinances.

4.13 Public Entity Crimes. A person or affiliate who has been placed on the convicted vendor list following a conviction of a public entity crime may not be awarded or perform work as a contractor, supplier, subcontractor, or engineer under a contract with any public entity in excess of the threshold amount provided in Florida Statutes, section 287.017 for Category Two for a period of thirty-six (36) months from the date of being placed on the convicted vendor list.

4.14 Prohibition against Contingent Fees. Contractor warrants that they have not employed or retained any company or person, other than a bona fide employee working solely for the Contractor to solicit or secure this Agreement and that they have not paid or agreed to pay any person, company, corporation, individual, or firm, other than a bona fide employee working solely for the Contractor, any fee, commission, percentage, gift or other consideration contingent upon or resulting from the award or making of this Agreement.

Article 5. General Conditions

5.1 This Agreement is made under, and in all respects shall be interpreted, construed, enforced, and governed by and in accordance with, the laws of the State of Florida. Venue for any legal action resulting from this Agreement shall lie solely in Volusia County, Florida.

5.2 No modification, amendment or alteration in the terms or conditions contained herein shall be effective unless contained in a written document executed with the same formality and of equal dignity herewith. The City may make changes in the services at any time by giving written notice to Contractor. If such changes increase (additional services) or decrease (eliminate any amount of work) in the scope of work, City and Contractor shall modify this agreement through issuance of a change order. All change orders shall be authorized in writing by City prior to commencing or reducing any term of this agreement.

5.3 Neither the City's review, approval or acceptance of, nor payment for, any of the services required shall be construed to operate as a waiver of any rights under this Agreement or of any cause of action arising out of

the performance of this Agreement and the Contractor shall be and remain liable to the City in accordance with applicable law for all damages to the City caused by the Contractor's performance of any of the services furnished under this Agreement.

5.4 In the event Contractor, during the course of the work under this Agreement, requires the services of any Sub-Contractor or other professional associates in connection with service covered by this Agreement, Contractor must secure the prior written approval of the City. If Sub-Contractors or other professional associates are required in connection with the services covered by this Agreement, Contractor shall remain fully and solely responsible for the services of and monies owed to Sub-Contractors or other professional associates.

5.5 It is recognized that questions in the day-to-day conduct of performance pursuant to this Agreement will arise. The City, upon request by Contractor, shall designate in writing and shall advise Contractor in writing of one (1) or more City employees to whom all communications pertaining to the day-to-day conduct of the Agreement shall be addressed. The designated representative shall have the authority to transmit instructions, receive information and interpret and define the City's policy and decisions pertinent to the work covered by this Agreement.

5.6 No claim for services furnished by the Contractor not specifically provided for herein shall hold the City liable or be honored by the City.

5.7 The Contractor agrees that it will not engage in any action that would create a conflict of interest in the performance of its obligations pursuant to this Agreement with the City or which would violate or cause others to violate the provisions of Part III, Chapter 112, Florida Statutes, relating to ethics in government.

5.8 The Contractor hereby certifies that no officer, agent or employee of the City has any material interest (as defined in Section 112.312(15), Florida Statutes, as over 5%) either directly or indirectly, in the business of the Contractor to be conducted here, and that no such person shall have any such interest at any time during the term of this Agreement.

5.9 The captions utilized in this Agreement are for the purposes of identification only and do not control or affect the meaning or construction of any of the provisions hereof.

5.10 This Agreement shall be binding upon and shall inure to the benefit of each of the parties and of their respective successors and permitted assigns. Nothing in this Agreement is intended or shall be deemed to confer any rights or benefits upon any entity or person other than the parties hereto or to make or render any such other entity or person a third-party beneficiary of this Agreement.

5.11 This Agreement may not be amended, released, discharged, rescinded or abandoned, except by a written instrument duly executed by each of the parties hereto.

5.12 The failure of any party hereto at any time to enforce any of the provisions of this Agreement will in no way constitute or be construed as a waiver of such provision or of any other provision hereof, nor in any way affect the validity of, or the right thereafter to enforce, each and every provision of this Agreement.

5.13 During the term of this Agreement Contractor assures City that it is in compliance with Title VII of the 1964 Civil Rights Act, as amended, and the Florida Civil Rights Act of 1992, in that Contractor does not on the grounds of race, color, national origin, religion, sex, age, disability or marital status, discriminated in any form or manner against Contractor employees or applicants for employment. Contractor understands and agrees that this Agreement is conditioned upon the veracity of this statement of assurance.

Article 6. Severability and Notice

6.1 The invalidity or unenforceability of any particular provision of this Agreement shall not affect the other provisions hereof, and this Agreement shall be construed in all respects as if such invalid or unenforceable provisions were omitted.

6.2 Wherever provision is made in this Agreement for the giving, service or delivery of any notice, statement or other instrument, such notice shall be in writing and shall be deemed to have been duly given, served and delivered, if delivered by hand or mailed by United States registered or certified mail or sent by facsimile, addressed as follows:

If to Contractor:	If to City:
NAME	NAME
TITLE	TITLE
COMPANY NAME	City of Deltona
ADDRESS	2345 Providence Blvd.
CITY, STATE, ZIP	Deltona, Florida 32725

Each party hereto may change its mailing address by giving to the other party hereto, by hand delivery, United States registered or certified mail notice of election to change such address.

Article 7. Scope of Agreement

7.1 This Agreement is intended by the parties hereto to be the final expression of their Agreement, and it constitutes the full and entire understanding between the parties with respect to the subject hereof, notwithstanding any representations, statements, or agreements to the contrary heretofore made.

7.2 This Agreement consists of the following:

This Agreement
Notice of Award and Notice to Proceed
ITB Documents, to include Project Manual and Drawings
Addendum, if any
Contractor's Response to ITB

IN WITNESS WHEREOF, the parties hereto have made and executed this Agreement for the purposes stated herein.

ATTEST:

_____
Secretary

(CORPORATE SEAL)

CONTRACTOR:

_____
President

_____
Date

ATTEST:

_____
JOYCE KENT
City Clerk

CITY OF DELTONA

_____
FAITH G. MILLER
City Manager

_____
Date

Approved as to Form and Legality:

_____
GRETCHEN R.H. VOSE
City Attorney

Performance Bond

(SECTION 00610)

Any singular reference to Contractor, Surety, Owner or other party shall be considered plural where applicable.

CONTRACTOR (Name and Address):

SURETY (Name and Address of Principal Place of Business):

OWNER (Name and Address):

CONTRACT
Date:
Amount:
Description (Name and Location):

BOND
Date (Not earlier than Contract Date):
Amount:
Modifications to this Bond Form:

Surety and Contractor, intending to be legally bound hereby, subject to the terms printed on the reverse side hereof, do each cause this Performance Bond to be duly executed on its behalf by its authorized officer, agent or representative.

CONTRACTOR AS PRINCIPAL
Company: (Corp. Seal)

Signature: _____
Name and Title:

SURETY
Company: (Corp. Seal)

Signature: _____
Name and Title:
(Attach Power of Attorney)

(Space is provided below for signatures of additional parties, if required.)

CONTRACTOR AS PRINCIPAL
Company: (Corp. Seal)

Signature: _____
Name and Title:

SURETY
Company: (Corp. Seal)

Signature: _____
Name and Title:

EJCDC No. 1910-28-A (1996 Edition)
Originally prepared through the joint efforts of the Surety Association of America, Engineers Joint Contract Documents Committee, the Associated General Contractors of America, and the American Institute of Architects.

1. The CONTRACTOR and the Surety, jointly and severally, bind themselves, their heirs, executors, administrators, successors and assigns to the Owner for the performance of the Contract, which is incorporated herein by reference.

2. If the CONTRACTOR performs the Contract, the Surety and the CONTRACTOR have no obligation under this Bond, except to participate in conferences as provided in paragraph 3.1.

3. If there is no OWNER Default, the Surety's obligation under this Bond shall arise after:

3.1. The OWNER has notified the CONTRACTOR and the Surety at the addresses described in paragraph 10 below, that the OWNER is considering declaring a CONTRACTOR Default and has requested and attempted to arrange a conference with the CONTRACTOR and the Surety to be held not later than fifteen days after receipt of such notice to discuss methods of performing the Contract. If the OWNER, the CONTRACTOR and the Surety agree, the CONTRACTOR shall be allowed a reasonable time to perform the Contract, but such an agreement shall not waive the OWNER's right, if any, subsequently to declare a CONTRACTOR Default; and

3.2. The OWNER has declared a CONTRACTOR Default and formally terminated the CONTRACTOR's right to complete the Contract. Such CONTRACTOR Default shall not be declared earlier than twenty days after the CONTRACTOR and the Surety have received notice as provided in paragraph 3.1; and

3.3. The OWNER has agreed to pay the Balance of the Contract Price to:

3.3.1. The Surety in accordance with the terms of the Contract;

3.3.2 Another contractor selected pursuant to paragraph 4.3 to perform the Contract.

4. When the OWNER has satisfied the conditions of paragraph 3, the Surety shall promptly and at the Surety's expense take one of the following actions:

4.1. Arrange for the CONTRACTOR, with consent of the OWNER, to perform and complete the Contract; or

4.2. Undertake to perform and complete the Contract itself, through its agents or through independent contractors; or

4.3. Obtain bids or negotiated proposals from qualified contractors acceptable to the OWNER for a contract for performance and completion of the Contract, arrange for a contract to be prepared for execution by the OWNER and the contractor selected with the OWNER's concurrence, to be secured with performance and payment bonds executed by a qualified surety equivalent to the Bonds issued on the Contract, and pay to the OWNER the amount of damages as described in paragraph 6 in excess of the Balance of the Contract Price incurred by the OWNER resulting from the CONTRACTOR Default; or

4.4. Waive its right to perform and complete, arrange for completion, or obtain a new contractor and with reasonable promptness under the circumstances;

4.4.1 After investigation, determine the amount for which it may be liable to the OWNER and, as soon as practicable after the amount is determined, tender payment therefor to the OWNER; or

4.4.2 Deny liability in whole or in part and notify the OWNER citing reasons therefor.

5. If the Surety does not proceed as provided in paragraph 4 with reasonable promptness, the Surety shall be deemed to be in default on this Bond fifteen days after receipt of an additional written notice from the OWNER to the Surety demanding that the Surety perform its obligations under this Bond, and the OWNER shall be entitled to enforce any remedy available to the OWNER. If the Surety proceeds as provided in paragraph 4.4, and the OWNER refuses the payment tendered or the Surety has denied pliability, in whole or in part, without further notice the OWNER shall be entitled to enforce any remedy available to the OWNER.

6. After the OWNER has terminated the CONTRACTOR's right to complete the Contract, and if the Surety elects to act under paragraph 4.1, 4.2, or 4.3 above, then the responsibilities of the Surety to the OWNER shall not be greater than those of the CONTRACTOR under the Contract, and the responsibilities of the OWNER to the Surety shall not be greater than those of the OWNER under the Contract. To a limit of the amount of this Bond, but subject to commitment by the OWNER of the Balance of the Contract Price to mitigation of costs and damages on the Contract, the Surety is obligated without duplication for:

6.1. The responsibilities of the CONTRACTOR for correction of defective Work and completion of the Contract;

6.2. Additional legal, design professional and delay costs resulting from the CONTRACTOR's Default, and resulting from the actions or failure to act of the Surety under paragraph 4; and

6.3. Liquidated damages, or if no liquidated damages are specified in the Contract, actual damages caused by delayed performance or non-performance of the CONTRACTOR.

7. The Surety shall not be liable to the OWNER or others for obligations of the CONTRACTOR that are unrelated to the Contract, and the Balance of the Contract Price shall not be reduced or set off on account of any such unrelated obligations. No right of action shall accrue on this Bond to any person or entity other than the OWNER or its heirs, executors, administrators, or successors.

8. The Surety hereby waives notice of any change, including changes of time, to the Contract or to related subcontracts, purchase orders and other obligations.

9. Any proceeding, legal or equitable, under this Bond may be instituted in any court of competent jurisdiction in the location in which the Work or part of the Work is located and shall be instituted within two years after CONTRACTOR Default or within two years after the CONTRACTOR ceased working or within two years after the Surety refuses or fails to perform its obligations under this Bond, whichever occurs first. If the provisions of this paragraph are void or prohibited by law, the minimum period of limitation available to sureties as a defense in the jurisdiction of the suit shall be applicable.

10. Notice to the Surety, the OWNER or the CONTRACTOR shall be mailed or delivered to the address shown on the signature page.

11. When this Bond has been furnished to comply with a statutory or other legal requirement in the location where the Contract was be performed, any provision in this Bond conflicting with said statutory or legal requirement shall be deemed deleted here from and provisions conforming to such statutory or other legal requirement shall be deemed incorporated herein. The intent is that this Bond shall be construed as a statutory bond and not as a common law bond.
12. Definitions.

12.1 Balance of the Contract Price: The total amount payable by the OWNER to the CONTRACTOR under the Contract after all proper adjustments have been made, including allowance to the CONTRACTOR of any amounts received or to be received by the OWNER in settlement of insurance or other Claims for damages to which the CONTRACTOR is entitled, reduced by all valid and proper payments made to or on behalf of the CONTRACTOR under the Contract.

12.2. Contract: The agreement between the OWNER and the CONTRACTOR identified on the signature page, including all Contract Documents and changes thereto.

12.3. CONTRACTOR Default: Failure of the CONTRACTOR, which has neither been remedied nor waived, to perform or otherwise to comply with the terms of the Contract.

12.4. OWNER Default: Failure of the OWNER, which has neither been remedied nor waived, to pay the CONTRACTOR as required by the Contract or to perform and complete or comply with the other terms thereof.

(FOR INFORMATION ONLY--Name, Address and Telephone)
AGENT or BROKER: OWNER'S REPRESENTATIVE (Engineer or other party):

Payment Bond

(SECTOPM 00620)

Any singular reference to Contractor, Surety, Owner or other party shall be considered plural where applicable.

CONTRACTOR (Name and Address):

SURETY (Name and Address of Principal Place of Business):

OWNER (Name and Address):

CONTRACT
Date:
Amount:
Description (Name and Location):

BOND
Date (Not earlier than Contract Date):
Amount:
Modifications to this Bond Form:

Surety and Contractor, intending to be legally bound hereby, subject to the terms printed on the reverse side hereof, do each cause this Payment Bond to be duly executed on its behalf by its authorized officer, agent, or representative.

CONTRACTOR AS PRINCIPAL
Company: (Corp. Seal)

Signature: _____
Name and Title:

SURETY
Company: (Corp. Seal)

Signature: _____
Name and Title:
(Attach Power of Attorney)

(Space is provided below for signatures of additional parties, if required.)

CONTRACTOR AS PRINCIPAL
Company: (Corp. Seal)

Signature: _____
Name and Title:

SURETY
Company: (Corp. Seal)

Signature: _____
Name and Title:

EJCDC No. 1910-28-B (1996 Edition)
Originally prepared through the joint efforts of the Surety Association of America, Engineers Joint Contract Documents Committee, the Associated General Contractors of America, the American Institute of Architects, the American Subcontractors Association, and the Associated Specialty Contractors.

1. The CONTRACTOR and the Surety, jointly and severally, bind themselves, their heirs, executors, administrators, successors and assigns to the OWNER to pay for labor, materials and equipment furnished for use in the performance of the Contract, which is incorporated herein by reference.

2. With respect to the OWNER, this obligation shall be null and void if the CONTRACTOR:

2.1. Promptly makes payment, directly or indirectly, for all sums due Claimants, and

2.2. Defends, indemnifies and holds harmless the OWNER from all claims, demands, liens or suits by any person or entity who furnished labor, materials or equipment for use in the performance of the Contract, provided the OWNER has promptly notified the CONTRACTOR and the Surety (at the addresses described in paragraph 12) of any claims, demands, liens or suits and tendered defense of such claims, demands, liens or suits to the CONTRACTOR and the Surety, and provided there is no OWNER Default.

3. With respect to Claimants, this obligation shall be null and void if the CONTRACTOR promptly makes payment, directly or indirectly, for all sums due.

4. The Surety shall have no obligation to Claimants under this Bond until:

4.1. Claimants who are employed by or have a direct contract with the CONTRACTOR have given notice to the Surety (at the addresses described in paragraph 12) and sent a copy, or notice thereof, to the OWNER, stating that a claim is being made under this Bond and, with substantial accuracy, the amount of the claim.

4.2. Claimants who do not have a direct contract with the CONTRACTOR:

1. Have furnished written notice to the CONTRACTOR and sent a copy, or notice thereof, to the OWNER, within 90 days after having last performed labor or last furnished materials or equipment included in the claim stating, with substantial accuracy, the amount of the claim and the name of the party to whom the materials were furnished or supplied or for whom the labor was done or performed; and

2. Have either received a rejection in whole or in part from the CONTRACTOR, or not received within 30 days of furnishing the above notice any communication from the CONTRACTOR by which the CONTRACTOR had indicated the claim will be paid directly or indirectly; and

3. Not having been paid within the above 30 days, have sent a written notice to the Surety and sent a copy, or notice thereof, to the OWNER, stating that a claim is being made under this Bond and enclosing a copy of the previous written notice furnished to the CONTRACTOR.

5. If a notice required by paragraph 4 is given by the OWNER to the CONTRACTOR or to the Surety, that is sufficient compliance.

6. When the Claimant has satisfied the conditions of paragraph 4, the Surety shall promptly and at the Surety's expense take the following actions:

6.1. Send an answer to the Claimant, with a copy to the OWNER, within 45 days after receipt of the claim, stating the amounts that are undisputed and the basis for challenging any amounts that are disputed.

6.2. Pay or arrange for payment of any undisputed amounts.

7. The Surety's total obligation shall not exceed the amount of this Bond, and the amount of this Bond shall be credited for any payments made in good faith by the Surety.

8. Amounts owed by the OWNER to the CONTRACTOR under the Contract shall be used for the performance of the Contract and to satisfy claims, if any, under any Performance Bond. By the CONTRACTOR furnishing and the OWNER accepting this Bond, they agree that all funds earned by the CONTRACTOR in the performance of the Contract are dedicated to satisfy obligations of the CONTRACTOR and the Surety under this Bond, subject to the OWNER's priority to use the funds for the completion of the Work.

9. The Surety shall not be liable to the OWNER, Claimants or others for obligations of the CONTRACTOR that are unrelated to the Contract. The OWNER shall not be liable for payment of any costs or expenses of any Claimant under this Bond, and shall have under this Bond no obligations to make payments to, give notices on behalf of, or otherwise have obligations to Claimants under this Bond.

10. The Surety hereby waives notice of any change, including changes of time, to the Contract or to related Subcontracts, purchase orders and other obligations.

11. No suit or action shall be commenced by a Claimant under this Bond other than in a court of competent jurisdiction in the location in which the Work or part of the Work is located or after the expiration of one year from the date (1) on which the Claimant gave the notice required by paragraph 4.1 or paragraph 4.2.3, or (2) on which the last labor or service was performed by anyone or the last materials or equipment were furnished by anyone under the Construction Contract, whichever of (1) or (2) first occurs. If the provisions of this paragraph are void or prohibited by law, the minimum period of limitation available to sureties as a defense in the jurisdiction of the suit shall be applicable.

12. Notice to the Surety, the OWNER or the CONTRACTOR shall be mailed or delivered to the addresses shown on the signature page. Actual receipt of notice by Surety, the OWNER or the CONTRACTOR, however accomplished, shall be sufficient compliance as of the date received at the address shown on the signature page.

13. When this Bond has been furnished to comply with a statutory or other legal requirement in the location where the Contract was to be performed, any provision in this Bond conflicting with said statutory or legal requirement shall be deemed deleted here from and provisions conforming to such statutory or other legal requirement shall be deemed incorporated herein. The intent is, that this Bond shall be construed as a statutory Bond and not as a common law bond.

14. Upon request of any person or entity appearing to be a potential beneficiary of this Bond, the CONTRACTOR shall promptly furnish a copy of this Bond or shall permit a copy to be made.

15. DEFINITIONS

15.1. Claimant: An individual or entity having a direct contract with the CONTRACTOR or with a Subcontractor of the CONTRACTOR to furnish labor, materials or equipment for use in the performance of the Contract. The intent of this Bond shall be to include without limitation in the terms "labor, materials or equipment" that part of water, gas, power, light, heat, oil, gasoline, telephone service or rental equipment used in the Contract, architectural and engineering services required for performance of the Work of the CONTRACTOR and the CONTRACTOR's Subcontractors, and all other items for which a mechanic's lien may be asserted in the jurisdiction where the labor, materials or equipment were furnished.

15.2. Contract: The agreement between the OWNER and the CONTRACTOR identified on the signature page, including all Contract Documents and changes thereto.

15.3. OWNER Default: Failure of the OWNER, which has neither been remedied nor waived, to pay the CONTRACTOR as required by the Contract or to perform and complete or comply with the other terms thereof.

(FOR INFORMATION ONLY--Name, Address and Telephone)
AGENCY or BROKER: OWNER'S REPRESENTATIVE (Engineer or other party):

SECTION 00700A

GENERAL INFORMATION AND INSTRUCTIONS TO BIDDERS

TABLE OF CONTENTS

Article	Title
1	Defined Terms
2	Contact
3	Copies of Bidding Documents
4	Delays
5	Qualifications of Bidders
6	Examination of Bidding Documents and Site
7	Addenda and Interpretations
8	Bid Security
9	Contract Time
10	Liquidated Damages and Indemnity
11	Substitute Material and Equipment
12	Subcontractors, etc.
13	Bid Form
14	Submission of Bids
15	Modification and Withdrawal of Bids
16	Acceptance/Rejection
17	Opening of Bids
18	Bids to Remain Open
19	Certificates, Licenses
20	Discounts
21	Mistakes
22	Award of Contract
23	Additional Terms and Conditions
24	Qualifications Submittals
25	Bonds and Insurance
26	Singing of Agreement
27	Availability of Land for Work
28	Taxes and Fees
29	Related Work Under Separate Contracts
30	Required Disclosure
31	Compliance with Occupation Safety and Health Act (O.S.H.A)
32	Protests
33	Conflict of Interest
34	Legal Requirements
35	Drug-Free Workplace
36	EEO Statement
37	Governmental Restrictions
38	Advertising
39	Assignment
40	Adjustments/Changes/Deviations
41	Purchasing Agreements with other Government Agencies
42	Certificates, Licenses, Registrations
43	References

44 Submittals
45 Unusual Circumstances
46 Invoicing and Payment
47 Posting of Bid Award
48 Permits, Licenses, Fees
49 Assignment
50 Facilities
51 Bid Preparation Costs
52 Additional Terms and Conditions

SECTION 00700

INSTRUCTIONS TO BIDDERS

ARTICLE 1 – DEFINED TERMS

1.1 Terms used in these instructions to Bidders which are defined in the General Conditions have the meanings assigned to them in the General Conditions, as supplemented. The term "Apparent Low Bidder" means the Bidder submitting the lowest Bid at the Bid opening without correction of numerical discrepancies or determination of responsiveness and responsibility. The term "Successful Bidder" means the Bidder to whom City awards or expects to award the Contract. Bidding Documents consist of the Project Manual and Drawings, both as may be modified by Addenda.

ARTICLE 2 – CONTACT

2.1 All prospective bidders are hereby instructed not to contact any member of the City of Deltona Commission, City Manager, City of Deltona Staff members or Engineers contracted by the City for this project, other than the noted contact person regarding this Invitation to Bid at any time during the bid process. Any such contact shall be cause for rejection of your bid.

ARTICLE 3 – COPIES OF BIDDING DOCUMENTS

3.1 Bidding Documents shall be obtained by contacting the Purchasing Agent for the City of Deltona at 386-878-8570 or email at kkrauss@deltonafl.gov

3.2 Complete sets of full size Bidding Documents shall be used in preparing Bids; neither the City nor Engineer assume any responsibility for errors or misinterpretations resulting from the use of incomplete sets of Bidding Documents.

3.3 City and Engineer, in making copies of Bidding Documents available on the above terms, do so only for the purpose of obtaining Bids on the Work and do not confer a license or grant for any other use.

ARTICLE 4 – DELAYS

4.1 The City, at its sole discretion, may delay the scheduled due dates indicated above if it is to the advantage of the City to do so. The City will notify bidders of all changes in scheduled due dates by written addendum.

ARTICLE 5 – QUALIFICATIONS OF BIDDERS

5.1 Each Bid must contain Bidder's license number to do business in the State of Florida.

5.2 To demonstrate qualifications to perform the Work, each Bidder must be prepared to submit, within seven (7) calendar days after Bid opening, information including, but not limited to, the qualifications submittals set forth in Article 24 of these Instructions to Bidders, evidence of authority to conduct business in the jurisdiction where the Project is located. Submittals requested pursuant to this paragraph shall be referred to as the Qualifications Submittals and are in addition to those required elsewhere.

ARTICLE 6 – EXAMINATION OF CONTRACT DOCUMENTS AND SITE

6.1 It is the responsibility of each Bidder before submitting a Bid:

6.1.1 To obtain a set of Bidding Documents and register as a document holder with the Purchasing Agent for the City of Deltona, Public Works Division;

6.1.2 To examine thoroughly the Contact Documents and other related data identified in the Bidding Documents (including "technical data" referred to below);

6.1.3 To visit the site to become familiar with and satisfy Bidder as to the general, local and site conditions that may affect cost, progress, performance or furnishing of the Work;

6.1.4 To consider federal, state and local Laws and Regulations that may affect cost, progress, performance or furnishing of the Work;

6.1.5 To study and carefully correlate Bidder's knowledge and observations with the Contract Documents and such other related data; and

6.1.6 To promptly notify the City of all conflicts, errors, ambiguities or discrepancies which Bidder has discovered in or between the Contract Documents and such other related documents.

6.2 Reference is made to the Supplementary Conditions for identification of:

6.2.1 Those reports of explorations and tests of subsurface conditions at or contiguous to the site which have been utilized by Engineer in preparation of the Contract Documents. Bidder may rely upon the general accuracy of the "technical data" contained in such reports but not upon other data, interpretation, opinions or information contained in such reports or otherwise relating to the subsurface conditions at the site, nor upon the completeness thereof for the purposes of bidding or construction.

6.2.2 Those drawings of physical conditions in or relating to existing surface and subsurface structures (except Underground Facilities) which are at or contiguous to the site that have been utilized by Engineer in preparation of the Contract Documents. Bidder may rely upon the general accuracy of the "technical data: contained in such drawings but not upon other data, interpretations, opinions or information shown or indicated in such drawings or otherwise relating to such structures, nor upon the completeness thereof for the purposes of bidding or construction.

6.3 Information and data shown or indicated in the Contract Documents with respect to existing Underground Facilities at or contiguous to the site is based upon information and data furnished to the Engineer by the City, and City and Engineer do not assume responsibility for the accuracy or completeness thereof unless it is expressly provide otherwise in the Supplementary Conditions.

6.4 Provisions concerning responsibilities for the adequacy of data furnished to prospective Bidders with respect to subsurface conditions, other physical conditions and Underground Facilities, and possible changes in the Contract Documents due to differing or unanticipated conditions appear in Paragraphs 4.2 and 4.3 of the General Conditions.

6.5 Before submitting a Bid each Bidder will be responsible to obtain such additional or supplementary examinations, investigations, explorations, tests, studies and data concerning conditions (surface, subsurface and Underground facilities) at or contiguous to the site or otherwise, which may affect cost, progress, performance or furnishing of the Work or which relate to any aspect of the means, methods, techniques, sequences or procedures of construction to be employed by Bidder an safety precautions and

programs incident thereto or which Bidder deems necessary to determine its Bid for performing and furnishing the Work in accordance with the time, price and other terms and conditions of the Contract Documents.

6.6 On request, City will provide each Bidder access to the site to conduct such examinations, investigations, explorations, tests and studies as each Bidder deems necessary for submission of a Bid. Bidder must fill all holes and clean up and restore the site to its former conditions upon completion of such explorations, investigations, tests and studies.

6.7 Reference is made to the Supplementary Conditions for the identification of the general nature of work that is to be performed at the site by City or others (such as utilities and other prime contractors) that relates to the work for which a Bid is to be submitted. On request, City will provide to each Bidder for examination access to or copies of Contract Documents (other than portions thereof related to price) for such work.

6.8 The submission of a Bid will constitute an incontrovertible representation by Bidder that Bidder has complied with every requirement of this Article 4, that without exception the Bid premised upon performing and furnishing the Work required by the Contract Documents and applying the specific means, methods, techniques, sequences or procedures of construction (if any) that may be shown or indicated or expressly required by the Contract Documents, that Bidder has given Engineer written notice of all conflicts, errors, ambiguities and discrepancies that Bidder has discovered in the Contract Documents and the written resolutions thereof by Engineer is acceptable to Bidder, and that the Contract Documents are generally sufficient to indicate and convey understanding of all terms and condition for performing and furnishing the Work.

ARTICLE 7 – ADDENDA AND INTERPRETATIONS

7.1 All Bidders shall carefully examine the Bid documents. Bidders shall promptly notify the City in writing prior to the opening of Bids of any ambiguity, inconsistency, or error which they may discover upon examination of the Bidding Documents or the site. Failure to do so, on the part of the Bidder, will constitute an acceptance by the Bidder of any subsequent decision.

7.2 All questions about the meaning or intent of the Bidding Documents shall be submitted to Kate Krauss, Purchasing Agent for the City of Deltona, in writing to email address; kkrauss@deltonafl.gov or via facsimile to (386) 878-8571 and must be received ten (10) calendar days prior to the bid due date. Replies considered necessary will be issued through Addenda on DemandStar. A facsimile will be sent to all parties recorded by Purchasing Agent as having received complete sets of Bidding Documents up to forty eight (48) hours before bid time, notifying bidders that an addenda is available for download. Brief Addenda may be issued between forty eight (48) and twenty-four (24) hours before bid time by facsimile to all parties recorded by Purchasing Agent as having received complete sets of Bidding Documents only. Questions received less than ten (10) calendar days prior to the date for opening of Bids will not be answered. Only questions answered by formal written Addenda will be binding. Oral and other interpretations or clarifications will be without legal effect and may not be relied upon by Bidders in submitting their bids. Failure of any Bidder to receive any such addendum or interpretation shall not relieve such Bidder from its terms and requirements. Receipt of all addenda shall be acknowledged by the Bidders signing and enclosing said addenda or addendum acknowledgement with their bid.

7.3 The City will record its responses to inquiries, any supplemental instructions, and/or necessary revisions to Bid Documents, in the form of a written addendum. Should revisions to the Bid Documents become necessary, the City will post a written addendum to the DemandStar website which will go out to all Bidders who received a bid package through DemandStar. Al addenda are posted to the DemandStar

website and current planholders are notified that an addendum has been issued. Bidders who obtain Bid Documents from other sources must officially register with the City' Purchasing Agent in order to be placed on the DemandStar website as a bid holder in order to receive any forthcoming addenda or other official communications. Failure to register as a prospective Bidder may cause your bid to be rejected as non-responsive if you have failed to submit a bid without an addendum acknowledgment for the most current addendum. It is the vendor's responsibility to check the DemandStar website at www.demandstar.com in order to be sure latest addendum and any prior addendum have been received.

ARTICLE 8 – BID SECURITY

8.1 Bid Security will be submitted and shall be made payable to City, in an amount of not less than five percent (5%) of the Bidder's Contract Price and in the form of a certified or cashier's check or a Bid Bond issued by a Surety meeting the requirements of Article 5 of the General Conditions as amended by the Supplementary Conditions. The Bid Bond shall be issued by a company having a registered agent in the State of Florida. Personal checks are not acceptable.

8.2 The Bid Security of the Successful Bidder will be retained until such Bidder has executed the Agreement and furnished the required payment and performance bonds, whereupon the Bid Security will be returned. If the Successful Bidder fails to furnish the qualifications submittals or fails to execute and deliver the Agreement and furnish the required Bonds within ten (10) days of the Notice of Award, City may annul the Notice of Award and the Bid Security of that Bidder will be forfeited. The Bid Security of any Bidder whom City believes to have a reasonable chance of receiving the award may be retained by City until the ninety-first (91) day after the Bid opening. Bid Security of other Bidders will be returned approximately seven (7) days after the Bid opening.

ARTICLE 9 – CONTRACT TIME

9.1 The number of consecutive calendar days within which, or the date by which, the Work is to be completed (the Contract Time) is set forth in the Supplemental Conditions.

ARTICLE 10 – LIQUIDATED DAMAGES AND INDEMNITY

10.1 Provisions for liquidated damages and incentive payments (if any) are set forth in the General Conditions.

10.2 All Bidders must state in the Bid Form the amount of consideration required by the Bidder in return for the Bidder's promise of indemnity contained in Paragraph 6.18 of the General Conditions and 725.06 of Florida Statutes. The amount to be stated shall be no less than $1,000.

10.2 The Bidder, without exemption, shall indemnify and save harmless, the City, its employees and/or any of its Commissioners from liability of any nature or kind, including cost and expenses for or on account of any copyrighted, patented, or unpatented invention, process, or item manufactured by the Bidder. Further, if such a claim is made, or is pending, the Bidder may, at its option and expense, procure for the City the right to use, replace or modify the item to render it non-infringing. If none of the alternatives are reasonably available, the City agrees to return the article on request to the Bidder and receive reimbursement. If the Bidder used any design, device, or materials covered by letters, patent or copyright, it is mutually agreed and understood, without exception, that the bid prices shall include all royalties or cost arising for the use of such design, device, or materials in any way involved in the work.

ARTICLE 11 – SUBSTITUE MATERIAL AND EQUIPMENT

11.1 The Contract, if awarded, will be awarded on the basis of material and equipment illustrated and described on the Drawings or specified in the Specifications. Substitutions or "or equal" items will not be considered when determining the Apparent Low Bidder. The Bidder shall base his Bid on providing one of the listed manufacturers. Whenever it is indicated in the Drawings or specified in the Specifications that a substitution or "or equal" item of material or equipment may be furnished or used by Contractor if acceptable to Engineer, application for such acceptance will not be considered by Engineer until after the "Effective Date of Agreement" and only for such items identified on the Bid Form at the time of bid. The procedure for submittal of any such application by Contractor and consideration by Engineer is set forth in the General Conditions, as may be supplemented in Division 1, General Requirements. If a substitution list is provided as part of the prescribed Bid Form, Bidders must identify proposed substitute materials and equipment at time of Bid submission. These substitute materials and equipment shall be evaluated after "Effective Date of the Agreement". Only the proposed substitutions or "or equal" items listed on the Substitution List will be evaluated by the Engineer in accordance with the General Conditions. The cost of changes in related work, additional drawings which may be required to illustrate or define the substitute equipment and its relationship to the other parts or portions of the Work shall be paid by the Contractor. No change will be made in the amount of time in which to complete the Work or in the liquidated damages. If the proposed substituted material or equipment is found to be unacceptable to the Engineer as an "or equal" item, then the material or equipment named in the Specifications or the bid Form (circled item) shall be furnished by the Contractor. If Bidder fails to circle one of the listed manufacturer's then the manufacturer identified as "A" shall be furnished.

ARTICLE 12 – SUBCONTRACTORS, ETC.

12.1 Bidder shall submit with the bid, all Sub Contractors and Affiliates utilized (form attached) for this project, including those who are to furnish the principal items of material and equipment as indicated in the principal items of material and equipment as indicated in Questionnaire. This list shall include the name and address of the Subcontractor, person or organization, a description of the services, materials or equipment to be supplied, estimated time required for preparation and submittal of shop drawings, and estimated lead times required for the fabrication of any long lead items and concurrence thereof. Such list shall be accompanied by a statement of experience with pertinent information as to similar projects and other evidence of qualification for each such Subcontractor, person or organization. If City or Engineer has a reasonable objection to any proposed Subcontractor, other person or organization, either may, before the Notice of Award, request the Apparent Low Bidder to submit an acceptable substitute without an increase in Bid price. If Apparent Low Bidder declines to make any such substitution, the City may elect not to award the Contract to such Bidder. A Bidder's declining to make any such substitution will not constituent grounds for sacrificing his Bid Security. Failure to provide this information with the bid may result in bid being declared non-responsive.

12.2 Procedures for approval of other Subcontractors after execution of the Agreement are described in the General And Supplementary Conditions.

ARTICLE 13 – BID RESPONSE FORM

13.1 The Bid Form is Section 00300 of the Solicitation Documents.

13.2 Bid Response Form must contain a manual signature, in ink, of an authorized representative, who has the legal ability to bind the Bidder in contractual obligations in the space provided on the Bid Response Form. Failure to properly sign the Bid shall invalidate same, and it shall not be considered for award. Bid must be

typed or legibly printed in ink. Use of erasable ink is not permitted. All corrections made by Bidder to any part of the bid document must be initialed in ink. The original bid conditions and specifications cannot be changed or altered in any way. Altered bids will not be considered. Clarification of bids submitted shall be in letter form, signed by bidders and attached to the bid. Bidder shall complete the "Corporate Authority", Joint Venture", "Sole Proprietorship", or "Partnership" portion of the Bidder Information Sheet, whichever part applies, and include with their bid submittal.

13.3 Bids by corporations must be executed in the corporate name by the president or a vice president (or other corporate officer accompanied by evidence of authority to sign) and the corporate seal must be affixed and attested by the secretary or an assistant secretary. The corporate address and state of incorporation must be show below the signature. If requested, the person signing a Bid for a corporation or partnership must produce evidence satisfactory to the City of the person's authority to bind the corporation or partnership. If the Bidder is a corporation, and if the Bid is executed by someone other than the president or vice president of the corporation, attach to the Bid a certified copy of corporate resolutions of the board of directors of the corporation authorizing the person to execute the Bid on behalf of the corporation.

13.4 Bids by partnerships must be executed in the partnership name and signed by a partner, whose title must appear under the signature and the official address of the partnership must be shown below the signature.

13.5 Bids submitted by firms under "joint venture" arrangements or other multi-party agreements must submit a power of attorney delegating authority to one principal with authority to negotiate and execute any/all contract documents resulting from negotiations/award of this Invitation to Bid.

13.6 All names and titles must be typed or printed in black ink below the signature.

13.7 The Bid shall contain an acknowledgment of receipt of all Addenda (the numbers of which shall be filled in on the Bid Form).

13.8 The address in which communications are needed regarding the Bid and are to be directed must be shown.

13.9 The business name of bidder shall be clearly typed, printed or stamped at the top of each page of the Bid Form.

13.10 A bidder must have at the time of bid opening, a company in operation, (if applicable) or be a fully authorized agent or representative of the product bid, and capable of producing or providing the items bid, and follow-up parts and service, including any warranty services as applicable, and so provide such certification upon request.

13.11 The City reserves the right to inspect the Bidder's facilities at any reasonable time, during normal working hours, to determine that Bidder has a bona fide place of business, and is a responsible Bidder.

ARTICLE 14- SUBMISSION OF BIDS

14.1 Bids shall be submitted before the time and at the place indicated in the Announcement and Bid Documents, and shall be submitted in an opaque sealed envelope. The envelope shall be marked on the exterior "**TIPTON DRIVE IMPROVEMENTS – Bid #PW 13-06**" with the name, address and Florida Contractor's Number of the Bidder and accompanied by the Bid Security and other required documents. If the Bid sent through the mail or other delivery system, the sealed envelope shall be enclosed in a separate envelope with the notation "SEALED BID ENVELOPE ENCLOSED" on the face thereof. The City will in no way be responsible for delays caused by the United States Postal Service or for delays caused by any other

occurrence or delivery service. Mailed bids shall be sent to the attention of Kate Krauss, Purchasing Agent for the City of Deltona Public Works Division.

14.2 Each Bid must contain three (3) COMPLETE SETS (one [1] original, one [1] paper copy of original and one [1] electronic copy (CD)) of the Bid submittal with all supporting documentation in a sealed envelope/container marked as noted above. The CD should be an exact duplicate of the hard copies and should be one complete file (PDF preferred), not a series of files. The Bidder may submit the Bid submittal in person or by mail. SUBMITTAL OF A BID IN RESPONSE TO THIS INVITATION TO BID CONSTITUTES AN OFFER BY THE BIDDER. Bids which do not comply with these requirements may be rejected at the option of the City.

14.3 Each Bid must contain the following documents in completed form:

1. Bidders Contact and Information Form (Section 00110)
2. Bid Response Forms (Section 00300)
3. Questionnaire Form (Section 00301)
4. Subcontractor Listing Form (Section 00301A)
5. References Form (Section 00301B)
6. Bid Bond Form or Security (Section 00410) - surety bond or cashier's check)
7.. Power of Attorney (for surety bond only)
8. Corporate Resolution Form (Section 00420)
9. Hold Harmless and Indemnity Agreement (Section 00430)
10. Drug-Free Workplace Form (Section 00440)
11. Proposers Certification Form (Section 00460)
12. Sworn Statement re: Public Entity Crimes Form (Section 00470)
13. Non-Collusion Affidavit Form (Section 00480)
14. Trench Safety Affidavit Form (Section 00490)

14.4 More than one (1) Bid received for the same work from an individual, firm or partnership, a Corporation or Association under the same or different names will not be considered. Reasonable grounds for believing that any Bidder is interested in more than one (1) Bid for the same work will cause the rejection of all such Bids in which the Bidder is interested. If there are reasonable grounds for believing that collusion exists among the Bidders, the Bids of participants in such collusion will not be considered. Bids in which the prices obviously are unbalanced will be subject to rejection.

14.5 Neither the City nor its representatives shall be liable for any expenses incurred in connection with preparation of a response to this Invitation to Bid. Bidders should prepare their bids simply and economically, providing all information and prices as required.

ARTICLE 15 – MODIFICATIONS AND WITHDRAWAL OF BIDS

15.1 Bids may only be modified or withdrawn by an appropriate document duly executed (in the manner that a Bid must be executed) and delivered to the place where Bids are to be submitted at any time prior to the deadline for submitting Bids. A request for withdrawal or a modification must be in writing and signed by a person duly authorized to do so; and, in case signed by a deputy or subordinate, the principal's proper written authority to such deputy or subordinate must accompany the request for withdrawal or modifications. Withdrawal of a Bid will not prejudice the rights of a Bidder to submit a new Bid prior to the Bid date and time. After expiration of the period for receiving Bids, no Bid may be withdrawn, modified, or explained.

15.2 If within twenty-four (24) hours after Bids are opened, any Bidder files a duly signed written notice with City and within forty-eight (48) hours thereafter demonstrates to the reasonable satisfaction of the City that: a) there has been a material and substantial mistake in the preparation of the Bid; b) the mistake is of such great consequence that to enforce the Contract would be unconscionable; and c) the mistake occurred notwithstanding the exercise of reasonable care in the preparation of the Bid; the Bidder may withdraw its Bid, and the Bid Security will be returned provided that the City is not seriously prejudiced, except for the loss of its bargain.

ARTICLE 16 – ACCEPTANCE / REJECTION

16.1 The City reserves the right to accept or reject any or all bids and to make the award to that Bidder, who in the opinion of the City will be in the best interest of and/or the most advantageous to the City. The City also reserves the right to reject the bid of any vendor who has previously failed in the proper performance of an award or to deliver on time contracts of a similar nature or who, in the City's opinion, is not in a position to perform properly under this award. The City reserves the right to inspect all facilities of bidders in order to make a determination as to the foregoing. The City reserves the right to waive any irregularities, informalities, and technicalities in offers received, and may, at its discretion, request a re-bid, or abandon the project / procurement in its entirety.

ARTICLE 17 – OPENING OF BIDS

17.1 Shall be public, at the above address, on the date and at the time specified above. The bid time shall be scrupulously observed. Under no circumstances shall bids delivered after the time specified be considered; such bids will be returned unopened. The City will not be responsible for late deliveries or delayed mail. The time/date stamp clock located in the Purchasing Agents office at the Public Works Division serves as the official authority to determine lateness of any bid. It is the Bidders sole responsibility to assure that his/her bid is complete and delivered at the proper time and place of the bid opening. Bids which for any reason are not so delivered will not be considered. Offers by facsimile, telegram or telephone are not acceptable. A bid may NOT be altered by the Bidder after opening of the bids. Bid tabulations will be furnished upon written request which includes a self-addressed, stamped envelope.

Persons with disabilities needing assistance to participate in the Public Bid Opening should contact Kate Krauss at least 48 hours in advance of the meeting at 386-878-8570.

ARTICLE 18 – BIDS TO REMAIN OPEN

18.1 All Bids shall remain open for delivery, by the City's issuance of the Notice of Award, for ninety (90) calendar days after the day of the Bid opening. The City may, at its sole discretion, release any Bid and return the Bid Security prior to that date.

18.2 Extensions of time when Bids shall remain open beyond the ninety (90) day period may be made only by mutual agreement between City, the Apparent Low Bidder, and the surety, if any, for the Apparent Low Bidder.

ARTICLE 19 – CERTIFICATES, LICENSES

19.1 The City reserves the right to require proof that the bidder is an established business and is abiding by the Ordinances, Regulations, and Laws of their Community and the State of Florida such as but not limited to: Occupational Licenses, Business Licenses, Florida Sales Tax Registration, and Federal Employee Identification Number.

ARTICLE 20 – DISCOUNTS

20.1 Cash discounts for prompt payment shall not be considered in determining the lowest net cost for bid evaluation purposes.

ARTICLE 21- MISTAKES

21.1 Bidders are expected to examine the terms and conditions, specifications, delivery schedule, bid prices, extensions and all instructions pertaining to supplies and services. Failure to do so will be at Bidder's risk. In the event of extension error(s), the unit price will prevail and the Bidder's total offer will be corrected accordingly. Written amounts shall take precedence over numerical amounts. In the event of addition error(s), the unit price, and extension thereof, will prevail and the Bidder's total offer will be corrected accordingly. Bids having erasures or corrections must be initialed in ink by the Bidder.

ARTICLE 22 – AWARD OF CONTRACT

22.1 City reserves the right to reject any and all Bids, to waive any and all informalities and reserve the right to disregard all non-conforming, non-responsive or conditional Bids. Bids may be considered irregular and subject to rejection if in the opinion of the City, they show serious omission, unauthorized alterations of form, unauthorized alternate Bids, incomplete or unbalanced unit prices, or irregularities of any kind. The City may reject, as non-responsive, any or all Bids where bidders fail to acknowledge receipt of addenda as prescribed. Discrepancies between words and figures will be resolved in favor of words. Discrepancies between the indicated sum of any column of figures and the correct sum thereof will be resolved in favor of the correct sum. Errors in the multiplication of unit prices by the number of units will be resolved in favor of the correct product.

22.2 If the Contract is to be awarded, it will be awarded to the most responsive, responsible, and lowest Bidder. Substitutions or "or equal" items listed in Section 10300 – Schedule of Manufacturers/Suppliers will not be considered when determining the lowest responsive bidder.

22.3 The City in its sole discretion, reserves the right to reject any and all bids and to waive any informality concerning Bids whenever such rejection or waiver is in the best interest of the City. The ability of a Bidder to obtain a performance and payment bond shall not be regarded as the sole test of such Bidder's competency or responsibility. Nothing contained herein shall place a duty upon the City to reject Bids or award the contract based upon anything other than its sole discretion as described herein.

22.4 The City may consider the qualifications and experience of Bidders and other persons and organizations, (including those who are to furnish the principal items of materials or equipment) proposed for those portions of the Work as to which the identity of Subcontractors and other persons and organizations must be submitted as provided in Article 12 of these Instructions to Bidders.

22.5 The City may conduct such investigations and require supplemental information as he deems necessary to assist in the evaluation of any Bid and to establish the responsibility, qualifications and financial ability of the Bidders, proposed Subcontractors and other persons and organizations to do the Work in accordance with Contract Documents to the City's satisfaction within the prescribe time. City reserves the right to reject the Bid of any Bidder who does not pass any such evaluation to City's satisfaction.

22.6 One (1) contract for the Work will be awarded, if award is made, to the lowest responsible, responsive Bidder. The Apparent Low Bidder who is awarded the Contract will be required to perform the Work as a Prime Contractor. No assignment of the Contract will be allowed without written permission of the City.

22.7 The Apparent Low Bidder shall submit, upon request of the City, documentation evidencing its capability to perform classes of work contemplated, and the necessary plant and sufficient capital to execute the work properly within the time specified. Operating costs, maintenance considerations, performance data and guarantees of materials and equipment may be considered by the City.

22.8 Recommendation for award will be posted for review by interested parties on DemandStar. Failure to file a protest to Purchasing within the time prescribed in the City's Purchasing Policy and Procedure Manual, shall constitute a waiver of proceedings.

22.9 If the Contract is to be awarded, the City will give the Apparent Low Bidder a Notice of Award within ninety (90) days after the date of the bid opening subject to the conditions in Article 22 of these Instruction to Bidders.

22.10 As the best interest of the City may require, the right is reserved to make award(s) by individual item, group of items, "All or None", or a combination thereof; with one or more suppliers; to reject any or all bids, or waive any minor irregularity or technicality in bids received, award or eliminate an portion of the bid, and may, at its sole discretion, request a re-bid, or abandon the project in its entirety. Bidders are cautioned to make no assumption until the City has entered into a contract or issued a purchase order.

22.11 Upon award recommendation or ten (10) days after opening, whichever is earlier, bids become "public records" and shall be subject to public disclosure consistent with Chapter 119.07(3)(o), Florida Statutes. Bidders must invoke the exemptions to disclosure provided by law in the response to the Bid, and must identify the data or other materials to be protected, and must state the reasons why such exclusion from public disclosure is necessary. Bids may be reviewed at the Public Works Division, 255 Enterprise Road, Deltona, Florida 32725.

ARTICLE 23 – ADDITIONAL TERMS AND CONDITIONS

23.1 Unless expressly accepted by the City, the following conditions shall apply: No additional terms and conditions included with the bid response shall be considered. Any and all such additional terms and conditions shall have no force and effect, and are inapplicable to this bid if submitted either purposely through intent or design, or inadvertently appearing separately in transmittal letters, specifications, literature, price lists or warranties. It is understood and agreed that the general and/or any special conditions in these Bid Documents are the only conditions applicable to this bid and the Bidder's authorized signature on the Bid Response Form attests to this. Exceptions to the terms and conditions will not be accepted.

ARTICLE 24 – QUALIFICATIONS SUBMITTALS

24.1 It is the intention of the City to award this contract to a Bidder competent to perform and complete the Work in a satisfactory manner. Accordingly, City will require the Apparent Low Bidder to submit within seven (7) days after bid opening, information including, but not limited to, the following, 1) evidence of Bidder's certification and license to perform the Work and Services; 2) experience with references; 3) financial statement; and 4) a subcontractor listing, to allow the City to conduct qualifications investigations.

24.2 The experience and financial statement shall provide data additional to that information provided in the Bid Form pertaining to Contractor's financial resources, adequacy of plant and equipment, manpower,

organization, and prior experience with references and a list of all previous or on-going construction contracts over the last five (5) years. Said information shall be certified by a Certified Public Accountant, and shall be submitted on the Associated General Contractors of America Form "Standard Questionnaires and Financial Statement for Bidders," available from AGC, 1975 "E" Street, NW Washington, DC 20006. The City at its discretion may require any or all of the above listed information from any other Bidder.

24.3 The Apparent Low Bidder and his surety, if any, hereby agree that any delays within Bidder's control in the delivery of the Qualifications Submittals will require a written request by Bidder for an extension of the time during which the Bid shall remain open for the City's acceptance. Should the City agree to such extension, Bidder will be required to comply with this Submittal Requirement within Five (5) additional calendar days. At the City's option, failure by the Apparent Low Bidder to deliver these Qualifications Submittals within the extended period will void evaluation of the Bid and will constitute proof that the Apparent Bidder has abandoned his Bid; his Bid Security shall be declared forfeited to the City as liquidated damages, and the Work shall be awarded to another Bidder.

24.4 If upon receipt and evaluation of the submittals the Apparent Low Bidder does not pass the evaluations to the City's satisfaction, the City reserves the right to reject the Bid.

ARTICLE 25 – BONDS AND INSURANCE

25.1 The General Conditions, as amended by the Supplementary Conditions, sets forth the City's requirements as to Bonds and Insurance. When the Successful Bidder delivers the executed Agreement to the City, it shall be accompanied by the required Bonds, Insurance Certificates and Endorsements. Payment and Performance Bonds shall be used with the forms provided within this solicitation.

ARTICLE 26 – SIGNING OF AGREEMENT

26.1 The contents of this Bid and all provisions of the successful bid deemed pertinent by the City shall be incorporated into a contract and become legally binding. A separate contract document, other than the purchase order, may not be issued. Any and all legal action necessary to enforce a contract or purchase order will be interpreted according to the laws of Florida. The venue shall be County of Volusia, Florida.

26.2 When City gives a Notice of Award to the Apparent Low Bidder, it will be accompanied by at least two (2) unsigned counterparts of the Agreement and all other Contract Documents. Within the (10) days of receipt thereafter, Apparent Low Bidder shall sign and deliver at least two (2) counterparts of the Agreement to the City together with the documents required in Article 14 above. Within ten (10) days of receipt of the properly executed and completed submittals, City will deliver a fully signed counterpart to Bidder.

26.3 Failure by a Successful Bidder, to whom the Contract is awarded, to execute the Agreement or to furnish the required Bonds or Insurance Certificates and Endorsements shall be just cause for the annulment of the award and the forfeiture of the Bid Security.

26.4 A Successful Bidder who is awarded the Contract and fails to execute the Agreement or furnish the required Bonds or Insurance Certificates and Endorsements within the period specified in Article 22 above, shall be liable to the City for all damages resulting therefrom including reasonable engineer's and attorney's fees and costs, and engineer's and attorney's fees and costs on appeal. The Bid Security forfeited shall not be a limitation thereon.

ARTICLE 27 – AVAILABILITY OF LANDS FOR WORK

27.1 The lands upon which the Work is to be performed, rights-of-way and easements for access thereto and other lands designated for use by Contractor in performing the work are identified in the Contract Documents. All additional lands and access thereto required for temporary construction facilities, construction equipment or storage of materials and equipment to be incorporated in the Work are to be obtained and paid for by Contractor. Easements for permanent structures or permanent changes in existing facilities are to be obtained and paid for by City unless otherwise provided in the Contract Documents.

ARTICLE 28 – TAXES AND FEES

28.1 The City is exempt from Federal Excise and state Sales Taxes on direct purchases of tangible personal property. The City's exemption numbers are on the face of the purchase order. If requested, the Purchasing Agent will provide an exemption certificate to the awarded Bidder. Vendors/Contractors doing business with the City shall not be exempted from paying sales tax to their suppliers for materials to fulfill contractual obligations with the City nor shall any Vendor/Contractor be authorized to use the City's Tax Exemption Number in securing such materials.

28.2 The Contractor shall pay all applicable sales, consumer, use and other similar taxes required by law. The Contractor is responsible for reviewing the pertinent State statutes involving the sales tax and complying with all requirements.

ARTICLE 29 – RELATED WORK UNDER SEPARATE CONTRACTS

29.1 The Bidder's attention is directed to the fact that the Work to be done under this contract is part of an overall system. The success of the Project is dependent upon the completion of the Work under this contract and the work to be done by others.

ARTICLE 30 – REQUIRED DISCLOSURE

30.1 With its Bid submission, Bidder shall disclose all material facts pertaining to any felony conviction or any pending felony charges in the last three (3) years in this State or any other state of the United States against (i) Bidder, (ii) any business entity related to or affiliated with Bidder, or (iii) any present or former executive employee, officer, director, stockholder, partner or owner of Bidder or of any such related or affiliated entity. This disclosure shall not apply to any person or entity which is only a stockholder, which person or entity owns 20 percent (20%) or less of the outstanding share of a Bidder whose stock is publicly owned and traded.

30.2 At its sole discretion, the City may reject any Bidder it finds to lack, or whose present or former executive employees, officers, directors, stockholders, partners or owners are found by the City to lack honesty, integrity, or moral responsibility. The discretion of the City may be exercised based on the disclosure required herein, the City's own investigation, public records, or any other reliable sources of information. The City may also reject any Bidder failing to make the disclosure required herein. By submitting a Bid, Bidder recognizes and accepts that the City may reject the Bid based upon the exercise of its sole discretion and Bidder waives any claim it might have for damages or other relief resulting from the rejection of its Bid based on these grounds.

ARTICLE 31 – COMPLIANCE WITH OCCUPATION SAFETY AND HEALTH ACT (O.S.H.A.)

31.1 Bidder certifies that all material, equipment, etc., contained in his/her bid meets all applicable O.S.H.A. requirements. Bidder further certifies that, if he/she is the successful Bidder, and the material, equipment, etc., delivered is subsequently found to be defective in any applicable O.S.H.A. requirement in effect on the date of delivery, all costs necessary to comply with the requirements shall be borne by the Bidder. The Bidders signature upon the Bid Response Form (Section 10300) is considered Certification of Conformance to such requirements.

ARTICLE 32 – PROTESTS

32.1 Any Bidder who disputes the bid selection or contract award recommendation shall file such protest according to the bid protest procedures. These procedures are available upon request from the City.

ARTICLE 33 – CONFLICT OF INTEREST

33.1 All Bidders must disclose with their bid the name of any officer, director, or agent who is also an employee of the City. All Bidders must disclose the name of any City employee who owns, directly or indirectly, an interest of five percent (5%) or more in the Bidder's form or any of its branches.

ARTICLE 34 – LEGAL REQUIREMENTS

34.1 Bidders are required to comply with all provisions of Federal, State, City and Local laws, ordinances, and rules and regulations that are applicable to the items being bid. Lack of knowledge by the Bidder shall in no way be a cause for relief from responsibility, or constitute a cognizable defense against the legal effect thereof.

ARTICLE 35 – DRUG-FREE WORKPLACE

35.1 Preference shall be given to business with Drug-Free Work Place (DFW) programs. Whenever two or more bids which are equal with respect to price, quality, and service are received by the City for the procurement of commodities or contractual services, a bid received from a business that completes the attached DFW form certifying that it is a DFW shall be given preference in the award process.

ARTICLE 36 – EEO STATEMENT

36.1 The City is committed to assuring equal opportunity in the award of contracts, and, therefore complies with all laws prohibiting discrimination on the basis of race, color, religion, national origin, age or sex.

ARTICLE 37 – GOVERNMENTAL RESTRICTIONS

37.1 In the event that any governmental restrictions are imposed which would necessitate alteration of the material quality, workmanship or performance of the items offered on this bid prior to their delivery, it shall be the responsibility of the Bidder to notify Purchasing at once, indicating in his/her letter the specific regulation which required an alteration, including any price adjustments occasioned thereby. The City reserves the right to accept such alteration or to cancel the contract or purchase order at no further expense to the City.

ARTICLE 38 - ADVERTISING

38.1 In submitting a bid, Bidder agrees not to use the results therefrom as a part of any commercial advertising, without the express written approval, by the appropriate level of authority within the City.

ARTICLE 39 - ASSIGNMENT

39.1 Any purchase order or contract issued pursuant to this Invitation to Bid and the monies which may become due hereunder are not assignable except with the prior written approval of the City, through the Finance Department.

ARTICLE 40 – ADJUSTMENTS / CHANGES / DEVIATIONS

40.1 No adjustments, changes or deviations shall be accepted on any item unless conditions or specifications of a bid expressly so provide. Any other adjustments, changes or deviations shall require prior written approval, and shall be binding ONLY if issued by the City's Finance Department. The Bidder shall bear sole responsibility for any and all costs of claims arising from any adjustments, changes or deviations not properly executed as required herein.

ARTICLE 41 – PURCHASING AGREEMETNS WITH OTHER GOVERNMENT AGENCIES

41.1 All Bidders submitting a response to this Invitation to Bid agree that such response also constitutes a bid to all governmental agencies, under the same conditions, for the same contract price, and for the same effective period as the bid, should the Bidder feel it is in their best interest to do so. Each governmental agency shall be responsible for its own purchases and each shall be liable only for materials and/or services ordered and received by it, and no agency assumes any liability by virtue of this bid. This agreement in no way restricts or interferes with the right of any governmental agency to rebid any or all items.

ARTICLE 42 – CERTIFICATES, LICENSES, REGISTRATIONS

42.1 Proof of Vendor's State of Florida, Department of Business Regulation Certification shall be provide with their bid submittal. The work shall be performed under a Florida Contractor's License and shall not be awarded unless proof of valid license(s) is provided. The City reserves the right to require proof that the bidder is an established business and is abiding by the Ordinances, Regulations, and Laws of their Community and the State of Florida such as but not limited to: Occupational Licenses, Business Licenses, Florida Sales Tax Registration, and Federal Employee Identification number.

ARTICLE 43 – REFERENCES

43.1 Bidder shall submit with the bid, eight (8) references (form attached) for projects of similar scope. Failure to provide this information with the bid may result in bid being declared non-responsive. The City of Deltona is seeking Contractors who have proven past, positive experiences in projects of similar and same size of scope of work. These references are required with your submittals. References shall contain the Owners contact information for the projects referenced. References with another Contractor listed as the Owner shall not be accepted. Contractors not having past, positive experiences in projects of similar and same size of scope of work, as the Prime Contractor, will not be considered.

ARTICLE 44 – SUBMITTALS

44.1 All submittals are REQUIRED and shall be submitted with the bid package at the time of the bid opening to be considered a responsive bidder. Faxed or Electronically submitted Bids shall not be accepted. Bidding companies shall submit three (3) COMPLETE SETS (one [1] original, one [1] copy and one [1] electronic copy (CD)) of the Bid submittal. The CD should be an exact duplicate of the hard copies and should be one complete file (PDF preferred), not a series of files. These documents constitute the complete set of terms and conditions, specification requirements, and bid forms. All bid sheets and attachments must be executed and submitted in a sealed envelope. Bids not submitted on the enclosed Bid Form shall be rejected. SUBMITTAL OF A BID IN RESPONSE TO THIS INVITATION TO BID CONSTITUTES AN OFFER BY THE BIDDER. Bids which do not comply with these requirements may be rejected at the option of the City.

ARTICLE 45 – UNUSUAL CIRCUMSTANCES

45.1 If during a contract term where costs to the City are to remain firm or adjustments are restricted by a percentage or CPI cap, unusual circumstances that could not have been foreseen by either party to the contract occur, and those circumstances significantly affect the Seller's cost in providing the required items or services, then the Seller may request adjustments to the costs to the City to reflect the changed circumstances. The circumstances must be beyond the control of the Seller, and the requested adjustments must be fully documented. The City may, after examination, refuse to accept the adjusted costs if they are not properly documented, increases are considered to be excessive, or decreases are considered to be insufficient. In the event the City does not wish to accept the adjusted costs and the matter cannot be resolved to the satisfaction of the City, the City will reserve the following options:

45.2 The contract can be canceled by the City upon giving thirty (30) days written notice to the Seller with no penalty to the City or Seller. The Seller shall fill all City requirements submitted to the Seller until the termination date contained in the notice.

45.3 The city requires the Seller to continue to provide the items and services at the firm fixed (non-adjusted) cost until the termination of the contract term then in effect.

45.4 If the City, in its interest and in its sole opinion, determines that the Seller in a capricious manner attempted to use this section of the contract to relieve themselves of a legitimate obligation under the contract, and no unusual circumstances had occurred, the City reserves the right to take any and all action under law or equity. Such action shall include, but not be limited to, declaring the Seller in default and disqualifying him for receiving any business from the City for a state period of time.

45.5 If the City does agree to adjusted costs, these adjusted costs shall not be invoiced to the City until the Seller receives notice in writing signed by a person authorized to bind the City in such matters.

ARTICLE 46 – INVOICING AND PAYMENT

46.1 Payment for any and all invoice(s) that may arise as a result of a contract or purchase order issued pursuant to this bid specification shall minimally meet the following conditions to be considered as a valid payment request:

46.2 A timely submission of a properly certified invoice(s), in strict accordance with price(s) and delivery elements as stipulated in the contract or purchase order document, and be submitted to the Finance Department at the address stipulated on the Purchase Order.

46.3 All invoices submitted shall consist of an original and one (1) copy; clearly reference the subject contract or purchase order number; provide a sufficient salient description to identify goods or service for which payment is requested; contain date of delivery; original or legible copy of signed delivery receipt including both manual signature and printed name of a designated City employee or authorized Agent; be clearly marked as invoice.

46.4 The invoice shall contain the Bidder's Federal Employer Identification Number (F.E.I.N.)

46.5 The City's terms are "Net 30 Days" after acceptance of goods or services and receipt of an acceptable invoice as described herein.

ARTICLE 47 – POSTING OF BID AWARD

47.1 Recommendation for award will be posted for review by interested parties on DemandStar. Failure to file a protest with the Purchasing Department within the time prescribed in the City of Deltona's Purchasing Policy and Procedure Manual, shall constitute a waiver of proceedings.

ARTICLE 48 – PERMITS, LICENSES AND FEES

48.1 Any permits, licenses, or fees required will be paid for by the Contractor and the responsibility of the Contractor, no separate or additional payment will be made. Adherence to all applicable code regulations (Federal, State, City) are the responsibility of the Contractor.

ARTICLE 49 – ASSIGNMENT

49.1 Any purchase order or contract issued pursuant to this Invitation to Bid and the monies which may become due hereunder are not assignable except with the prior written approval of the City, through the Finance Department.

ARTICLE 50 – FACILITIES

50.1 The City reserves the right to inspect the Bidder's facilities at any reasonable time, during normal working hours, to determine that Bidder has a bona fide place of business, and is a responsible Bidder.

ARTICLE 51 – BID PREPARATION COSTS

51.1 Neither the City nor its representatives shall be liable for any expenses incurred in connection with preparation of a response to this Invitation to Bid. Bidders should prepare their bids simply and economically, providing all information and prices as required.

ARTICLE 52 – ADDITONAL TERMS AND CONDITIONS

52.1 Unless expressly accepted by the City, the following conditions apply: No additional terms and conditions included with the bid response shall be considered. Any and all such additional terms and conditions shall have no force and effect, and are inapplicable to this bid if submitted either purposely through intent or design, or inadvertently appearing separately in transmittal letters, specifications, literature, price lists or warranties. It is understood and agreed that the general and/or any special conditions in these Bid Documents are the only conditions applicable to this bid and the Bidder's authorized signature on the Bid Response Form attests to this. Exceptions to the terms and conditions will not be accepted.

SECTION 00700B
GENERAL CONDITIONS

TABLE OF CONTENTS

ARTICLE 1	**DEFINITIONS/INTERPRETATIONS**
1.1	Definitions
1.2	Interpretations
ARTICLE 2	**PRELIMINARY MATTERS**
2.1	Copies of Documents
2.2	Commencement of the Contract Time; Notice to Proceed
2.3	Before Starting Construction
2.4	Preconstruction Conference
ARTICLE 3	**CONTRACT DOCUMENTS**
3.1	Applicable Law; Intent
3.2	Priority of the Contract Documents
3.3	Use of Forms Provided
3.4	Reuse of Documents
ARTICLE 4	**AVAILABILITY OF LANDS; PHYSICAL CONDITIONS; REFERENCE POINTS**
4.1	Availability of Lands
4.2	Physical Conditions (Including Underground Facilities
4.3	Differing Physical Conditions (including Underground Facilities)
4.4	Resolution of a Report of Differing Physical Conditions
4.5	Special Requirements for Underground Facilities
4.6	Reference Points
ARTICLE 5	**BONDS AND INSURANCE**
5.1	Performance, Payment and Other Bonds
5.2	Contractor's Insurance - General
5.3	City's Insurance
5.4	Workers' Compensation Insurance and Employer's Liability Insurance
5.5	Liability Insurance
5.6	Property Insurance
5.7	Waiver of Rights
5.8	Owner May Object to Insurance
ARTICLE 6	**CONTRACTOR'S RESPONSIBILITIES**
6.1	Supervision and Superintendence
6.2	Personnel and Working Hours
6.3	Apprentices
6.4	CONTRACTOR's Responsibilities for Furnishing
6.5	Items of Material or Equipment
6.6	Wood Products
6.7	Equivalent Materials and Equipment
6.8	Concerning Subcontractors, Suppliers and Others

6.9	Patent Fees and Royalties
6.10	Permits
6.11	Laws and Regulations
6.12	Use of Premises
6.13	Record Documents
6.14	Safety and Protection
6.15	Emergencies
6.16	Shop Drawings and Samples
6.17	Continuing the Work
6.18	Indemnity
6.19	Progress of the Work
6.20	Project Meetings
6.21	CONTRACTOR Not Agent of City
6.22	Inspection and Audit
6.23	Truth-in-Negotiation
6.24	Correspondence
6.25	Protection of Historical Properties
6.26	Responsibility of Connecting to Existing Services and Utilities
6.27	Additional Provisions
ARTICLE 7	**WORK BY OTHERS**
7.1	Related Work at Site
7.2	Mutual Duties and Responsibilities
7.3	Extensions in Contract Time
7.4	Contract Time Coordination
ARTICLE 8	**CITY'S RESPONSIBILITIES**
8.1	General
ARTICLE 9	**ENGINEER'S AND DESIGN ENGINEER'S STATUS DURING CONSTRUCTION**
9.1	City's Representative
9.2	Visits to Site
9.3	Project Representation
9.4	Duties, Responsibilities and Limitations of Authority of Construction Manager
9.5	Duties, Responsibilities and Limitations of Authority of Field Representative
9.6	Clarifications and Interpretations
9.7	Authorized Variations in Work
9.8	Rejecting Defective Work
9.9	Determinations of Quantities and Classifications of Unit Price Work
9.10	Decisions on Disputes
9.11	Limitations on ENGINEER's, DESIGN ENGINEER's and Field Representative
ARTICLE 10	**CHANGES IN THE WORK**
10.1	Changes in the Work
10.2	Change Orders and Change Requests
10.3	Waivers
ARTICLE 11	**CHANGES IN CONTRACT PRICE OR CONTRACT TIME**
11.1	Changes in Contract Price or Contract Time
11.2	Proposals or Claims Substantiating Adjustments

11.3	Methods for Determining Adjustments in Contract Price
11.4	Determining Cost Adjustments to Changes in Contract Price
11.5	Costs Covered by CONTRACTOR's Allowances
11.6	CONTRACTOR Allowances for Change and Additions to the Work
11.7	Unit Price Work
11.8	Cash Allowances
11.9	Criteria for Determining Adjustments in Contract Time
11.10	Waivers
ARTICLE 12	**SCHEDULES**
12.1	Progress and Submittal Schedules
ARTICLE 13	**WARRANTY AND GUARANTEE, TESTS AND INSPECTIONS, CORRECTIONS, REMOVAL OR ACCEPTANCE OF DEFECTIVE WORK**
13.1	Warranty and Guarantee
13.2	Access to Work
13.3	Tests and Inspections
13.4	Uncovering Work
13.5	Correction or Removal of Defective Work
13.6	Acceptance of Defective Work
13.7	City May Correct Defective Work
13.8	Warranty Period
13.9	Extended Warranties and Guarantees
13.10	Special Maintenance Requirements
13.11	Extended Warranty Period Due to Defective Work
ARTICLE 14	**PAYMENTS TO CONTRACTOR AND COMPLETION**
14.1	Schedules
14.2	Application for Payment
14.3	Materials on Site
14.4	CONTRACTOR's Warranty of Title
14.5	Review and Payment
14.6	Retainage
14.7	Overpayment
14.8	Final Application for Payment
14.9	Final Payment and Acceptance
14.10	Waiver of Claims
14.11	City's Obligations
14.12	Partial Utilization
14.13	Substantial Completion
14.14	Final Inspection
14.15	CONTRACTOR's Continuing Obligation
ARTICLE 15	**SUSPENSION OF WORK AND TERMINATION**
15.1	City May Stop Work
15.2	Suspension for Convenience
15.3	Termination for Cause
15.4	Termination for Convenience
15.5	CONTRACTOR May Stop Work or Terminate

ARTICLE 16 **VALUE ENGINEERING INCENTIVE**

ARTICLE 17 **MISCELLANEOUS**
17.1 Giving Notice
17.2 Notice to Other Agencies
17.3 Computation of Time
17.4 Claims for Injury or Damage to Person or Property
17.5 No Conflict with Laws or Regulations
17.6 Partial Invalidity
17.7 No Waiver of Rights, Duties
17.8 Advertising
17.9 Venue
17.10 Recovery of Damages

ARTICLE 1 - DEFINITIONS/INTERPRETATIONS

1.1 Definitions

Whenever used in the Contract Documents, the following terms shall have the meanings indicated, which shall be applicable to both the singular and plural thereof.

Addenda - Written or graphic instruments issued prior to the date for opening Bids which modify or interpret the Contract Documents by additions, deletions, corrections or clarifications.

Acceptance, Final Acceptance - The formal action by CITY accepting the Work as being complete after certification by ENGINEER of final completion.

Agreement - The written agreement between CITY and CONTRACTOR covering the Work to be performed; other Contract Documents are incorporated in or referenced in the Agreement and made a part thereof as provided therein.

Apparent Low Bidder - The Bidder submitting the lowest Bid at the Bid Opening without correction of numerical discrepancies or determination of responsiveness and responsibility.

Application for Payment - The form furnished in the Contract Documents which is to be used by CONTRACTOR in requesting progress or Final Payments and which shall contain an affidavit of CONTRACTOR that Progress Payments theretofore received from CITY on account of the Work have been applied by CONTRACTOR to discharge in full all of CONTRACTOR's obligations stated in prior Applications for Payment. The application includes such supporting documentation as required by the Contract Documents.

Bid - The offer or proposal of a Bidder submitted in the prescribed manner on the prescribed forms to perform the Work in accordance with the Contract Documents.

Bidder - The individual, partnership, corporation, joint venture, or other legal entity or combination thereof submitting a Bid for the Work directly to CITY through an authorized representative.

Bid Security - The security designated in the Instructions to Bidders.

Bonds - Instruments of security furnished by CONTRACTOR and his surety in accordance with the Contract Documents.

Change Order - A written instrument issued on or after the Effective Date of the Agreement, which when duly executed by CITY amends the Contract Documents to provide for changes in the Work or in the provisions of the Contract Documents, or changes in Contract Price or Contract Time, or any combination thereof.

Change Request - A written instrument which when signed by CITY is a directive authorizing a change in the Work or in the provisions of the Contract Documents, or an adjustment in Contract Price or Contract Time, or any combination thereof. Even when signed by CITY, a Change Request is not an instrument that amends the Contract Documents; however, it may be converted to a Change Order. An unsigned Change Request may be used by CITY and CONTRACTOR to negotiate changes in the Work or in the provisions of the Contract Documents, or adjustments in Contract Price or Contract Time, or any combination thereof CITY; the OWNER.

Construction Manager - The authorized representative of CITY who is assigned to the Project.

Contract Documents - Those documents named in Article 8 of the Agreement.

Contract Price - The total compensation, subject to authorized adjustments, payable by CITY to CONTRACTOR under the Contract Documents as stated in the Agreement.

Contract Time - The period of time allotted in the Contract Documents, subject to authorized adjustments, for Substantial Completion of the Work, or specified part thereof.

CONTRACTOR - The individual, partnership, corporation, joint venture, or other legal entity or combination thereof who has entered into the Agreement with CITY for the performance of the Work. The term "CONTRACTOR" means CONTRACTOR or its authorized representative.

Cost and Pricing Data - Refers to all data available to or relied upon by CONTRACTOR in negotiating, pricing or costing Work covered by a Change Order or a Change Request, or involved in a proposal or claim. Sample Cost and Pricing Data include proposal or claim estimates, CONTRACTOR's Bid estimate, estimating guides, CONTRACTOR's computations and projections, and the assumptions made by CONTRACTOR in pricing or figuring increases or decreases in Contract Price or Contract Time.
Date of Commencement of the Contract Time - The date given by the Notice to Proceed when the Contract Time commences to run.

Day - A calendar day of 24 hours lasting from midnight one day to midnight the next day.

Defective - An adjective which when modifying the word Work refers to work that is unsatisfactory, faulty or deficient, or does not conform to the Contract Documents, or does not meet the requirements of any inspection, reference standard, test or approval referred to in the Contract Documents, or has been damaged prior to Final Payment (unless responsibility for the protection thereof has been assumed by CITY).

DESIGN ENGINEER - The person, firm, or corporation who is named as such in the Agreement who designed the Project and has the rights and authority as assigned to him in the Contract Documents. The term "DESIGN ENGINEER" means DESIGN ENGINEER or its authorized representative.

Drawings, Plans - The Drawings, Plans or reproduction thereof, which show scope, character, location, dimensions, and other details of the Work to be performed and which are included in the Contract Documents.

Effective Date of the Agreement - The date indicated in the Agreement on which it becomes effective, but if no such date is indicated it means the date on which the Agreement is signed by the last of the two parties to sign.

ENGINEER - The individual, partnership, corporation, joint venture, or any combination thereof, named as ENGINEER in the Agreement who will have the rights and authority assigned to ENGINEER in the Contract Documents. The term "ENGINEER" means the ENGINEER or its authorized representative.

Federal Contract Provisions - Federal Regulatory Agency or statutory requirements applicable to the Work and included in the Contract Documents under this heading.

Field Order - A written instrument issued by ENGINEER to CONTRACTOR which orders minor variations in the Work, as opposed to a change in the Work, and which does not involve an adjustment in Contract Price or Contract Time.

Field Representative - Person who is assigned to the site or any part thereof by CITY.
General Requirements - Sections of Division 1 of the Specifications.

Holidays - Days designated by CITY as legal holidays.

Laws and Regulations; Laws or Regulations - Laws, Rules, Regulations, Ordinances, and/or court or administrative Orders of the federal, state and local governments.

Low Bidder - The lowest responsive, responsible Bidder.

Notice of Award - The written notice of the acceptance of the Bid from CITY to Low Bidder.

Notice to Proceed - The written notice issued by CITY to CONTRACTOR authorizing it to proceed with the Work and establishing the Date of Commencement of the Contract Time.

OWNER - Refer to definition of CITY.

Payment Bond - The security furnished by CONTRACTOR and its surety as a guarantee that CONTRACTOR will pay in full all Bills and accounts, from claimants as defined in Florida Statutes Chapter 713, or as amended, for material, labor, services and supplies used directly or indirectly in the prosecution of the Work; the covered amount of the Payment Bond is separate and distinct from the covered amount of the Performance Bond.

Performance Bond - The security furnished by CONTRACTOR and its surety as a guarantee that CONTRACTOR will perform all of its contractual obligations in accordance with the terms of the Contract Documents; the covered amount of the Performance Bond is separate and distinct from the covered amount of the Payment Bond.

Progress Schedule - All documentation related to the planning and scheduling of the Work as described in these General Conditions and the General Requirements.

Project - The total construction of which the Work to be provided under the Contract Documents may be the whole, or a part as indicated elsewhere in the Contract Documents.

Request for Information - CONTRACTOR's inquiries for information as submitted on the Request for Information form included in the Contract Documents.

Shop Drawings - All Drawings, diagrams, illustrations, schedules and other data which are specifically prepared by or for CONTRACTOR to illustrate some portion of the Work and all illustrations, brochures, standard schedules, performance charts, instructions, diagrams and other information prepared by a Supplier and submitted by CONTRACTOR to illustrate material or equipment for some portion of the Work, specifically indicating how CONTRACTOR will comply with the Contract Documents.

Specifications - Those portions of the Contract Documents consisting of written or graphic technical descriptions of materials, equipment, construction systems, standards and workmanship as applied to the Work and certain administrative details applicable thereto.

Sub-Agreement - A contract or purchase order awarding a part of the Work under the Contract Documents to a Subcontractor, Supplier or other person or entity.

Subcontractor - An individual, partnership, corporation, joint venture, or other combination thereof having a Sub-agreement with CONTRACTOR for (a) the performance of labor in connection with part of the Work at the site; or

(b) for both performing labor in connection with part of the Work at the site and furnishing items of materials or equipment for incorporation into the Work. Subcontractor also means an individual, partnership, corporation, joint venture, or other combination thereof who has a Sub-agreement with another Subcontractor to perform any of the Work at the site.

Substantial Completion - That date when (a) the Work (or a specified part thereof) is complete in accordance with the Contract Documents, with the exception of the minor items identified during the inspection described in these General Conditions, and (b) the Work can be utilized for the purposes for which it is intended, as may be evidenced by successful completion of all specified pre-operational start-up and demonstration tests. The terms "substantially complete" and "substantially completed" as applied to any Work refer to Substantial Completion thereof.

Supplementary Conditions - The part of the Contract Documents which amends or supplements these General Conditions or other portions of the Contract Documents as stated therein and is designated as such.

Supplier - A manufacturer, fabricator, supplier, distributor, materialman or vendor.

CITY - CITY OF DELTONA

Underground Facilities - All pipelines, conduits, ducts, cables, wires, manholes, vaults, tanks, tunnels or other such facilities or attachments, and any encasements containing such facilities which have been installed underground to furnish any of the following services or materials: electricity, gases, steam, liquid petroleum products, telephone or other communications, cable television, sewage and drainage removal, traffic or other control systems or water.

Unit Price Work - Work to be paid on the basis of unit prices. The term contingent Unit Price Work refers to Unit Price Work which is foreseeable but not certain to materialize during the performance of the Work.

Warranty Period - The period of time within which CONTRACTOR shall promptly, without cost to CITY and in accordance with CITY's written instructions, either correct defective Work or, if it has been rejected by CITY, remove it from the site and replace it with non-defective Work.

Work - Any and all obligations, duties, responsibilities, labor, materials, equipment, temporary facilities, utilities, and incidentals and the furnishing thereof necessary to complete the construction assigned to, or undertaken by CONTRACTOR pursuant to the Contract Documents. Also, the completed construction or parts thereof required to be provided under the Contract Documents, including all materials, equipment, and supplies incorporated or to be incorporated in the construction.

1.2 Interpretations

1.2.1. Any reference to an Article or paragraph in these General Conditions without identification of the particular Section shall means a reference to these General Conditions.

1.2.2. Each Article in these General Conditions is composed of sub-articles, numbered as this sub-article 1.2 is numbered; parts, numbered as this part 1.2.1 is numbered; and sub-parts - all of which are generally referred to as "paragraphs". A reference to a sub-article means a reference to the entire sub-article, or to a part, or a sub-part, or any combination of them, depending on the intent of the reference.

1.2.3. Often, the Contract Documents omit the modifying word "all" and "any", and the articles "the" and "an". However, omitting modifiers or articles from, or inserting any of them into, a statement shall not in any way affect the meaning or interpretation of either statement.

ARTICLE 2 - PRELIMINARY MATTERS

2.1 Copies of Documents

CITY shall furnish to CONTRACTOR five copies of the Contract Documents free of charge. CONTRACTOR will reimburse the Design Engineer for the preparation of additional copies.

2.2 Commencement of the Contract Time; Notice to Proceed

2.2.1. The Contract Time will commence to run on the day indicated in the Notice to Proceed. The Notice to Proceed may indicate a Date of Commencement of the Contract Time any time within thirty days after the Effective Date of the Agreement.

2.2.2. CONTRACTOR shall start to perform the Work on the Date of Commencement of the Contract Time. No Work shall be done at the site prior to the date on which the corresponding Contract Time commences to run unless otherwise authorized in writing by CITY.

2.3 Before Starting Construction

2.3.1. Before undertaking each part of the Work, CONTRACTOR shall carefully study and compare the Contract Documents and check and verify pertinent figures shown thereon and all applicable field measurements. CONTRACTOR shall promptly report in writing to ENGINEER any conflict, error or discrepancy which CONTRACTOR or any of his Subcontractors or Suppliers may discover and shall obtain a written interpretation or clarification from ENGINEER before proceeding with any work affected thereby; provided, however, CONTRACTOR shall not be liable to CITY or ENGINEER for failure to report any conflict, error or discrepancy unless CONTRACTOR or any of his Subcontractors or suppliers had actual knowledge thereof or should reasonably have known thereof.

2.3.2. Within ten days after the Effective Date of the Agreement (unless otherwise specified in the General Requirements), CONTRACTOR shall submit to ENGINEER for review a preliminary Progress Schedule indicating the starting and completion dates of the various stages of the Work, a proposed schedule of Shop Drawing submissions, a proposed schedule of values of the Work on the form provided by ENGINEER, and a listing of manpower and cash flow projections through the Contract Time.

2.3.3. The schedule of values shall include quantities and prices of items aggregating the Contract Price, and shall subdivide the Work into component parts in sufficient detail to serve as the basis for Applications for Payment during construction. CONTRACTOR shall confirm in writing at the time of submission, that an appropriate amount of direct costs, supplemental costs, administrative expenses, contingencies and profit have been allocated to each item of Work.

2.3.4. If the Bid Form contains a bid item price for mobilization, the Schedule of Values shall distribute these costs such that no more than 50% of the bid item amount shall be paid as mobilization in the first Application for Payment and at least 10% of the bid item amount shall be paid in the last Application for Payment as demobilization with the remainder paid in equal installments over the Contract Time. In no event shall the Contractor be entitled to receive in its first Application for Payment an amount in excess of five (5) percent of the original Contract Price for mobilization.

2.3.5. CITY or ENGINEER will review and return the schedules submitted in accordance with this Article and CONTRACTOR, if required, shall revise, adjust or modify and resubmit acceptable schedules within the time periods required, and if none are required ,at least ten (10) days before submission of the first Application for Payment.

2.4 Preconstruction Conference

2.4.1. Prior to commencement of Work at the site, a conference will be held for review of the schedules, to establish procedures for handling Shop Drawings and other submittals and for processing Applications for Payment, and to establish a working understanding among the parties as to the Work. CONTRACTOR shall attend such conference and shall require any or all of its Subcontractors and Suppliers, as CITY directs, to attend the conference.

2.4.2. Unless otherwise stated at the Preconstruction Conference or a Project Meeting, the Construction Manager as assigned in writing by the CITY will be the single authorized representative assigned the duty of, and authorized to, transmit or receive communications between CONTRACTOR and ENGINEER for the remaining term of the Agreement.

ARTICLE 3 - CONTRACT DOCUMENTS: INTENT and REUSE.

3.1 Applicable Law; Intent

3.1.1. The Contract Documents comprise the entire agreement between CITY and CONTRACTOR concerning the Work. The Contract Documents are complementary; what is called for by one is as binding as if called for by all. The Contract Documents will be governed by the law of the place of the Project.

3.1.2. It is the intent of the Contract Documents to describe a functionally complete Project (or part thereof) to be constructed in accordance with the Contract Documents. Any Work, materials or equipment that may reasonably be inferred from the Contract Documents as being required to produce the intended result shall be supplied whether or not specifically called for. When words which have a well-known technical or trade meaning are used to describe Work, materials or equipment, such words shall be interpreted in accordance with that meaning. Reference to standard specifications, manuals or codes of any technical society, organization or association, or to the Laws or Regulations of any governmental entity whether such reference be specific or by implication, shall mean the latest standard specification, manual, code or Laws or Regulations in effect at the time of opening of Bids, except as may be otherwise specifically stated. However, no provision of any referenced standard specification, manual or code (whether or not specifically incorporated by reference in the Contract Documents) shall change the duties and responsibilities of CITY, CONTRACTOR, DESIGN ENGINEER or ENGINEER, or any of their consultants, agents or employees from those set forth in the Contract Documents, nor shall it assign to CITY or ENGINEER, or any of their consultants, agents or employees, any duty or authority to supervise or direct the furnishing or performance of the Work or any duty or authority to undertake responsibility contrary to the provisions of Article 8 or 9.

3.2 Priority of the Contract Documents

3.2.1. If, during the performance of the Work, CONTRACTOR, or any of his Subcontractors or Suppliers, finds a conflict, error or discrepancy in the Contract Documents, CONTRACTOR shall so report to ENGINEER in writing at once, and before proceeding with the Work affected thereby, shall obtain a

written interpretation or clarification from ENGINEER. However, CONTRACTOR shall not be liable to CITY or ENGINEER for failure to report any conflict, error or discrepancy in the Contract Documents unless CONTRACTOR or any of his Subcontractors or Suppliers had actual knowledge thereof or should reasonably have known thereof. ENGINEER will promptly investigate the matter and respond to CONTRACTOR with an interpretation or clarification.

After CONTRACTOR's discovery of such a conflict, error or discrepancy, or after the date when CONTRACTOR should have reasonably known thereof, until the interpretation or clarification is obtained from ENGINEER, any Work done by CONTRACTOR which is directly or indirectly affected by same, will be at CONTRACTOR's own risk and CONTRACTOR shall bear all costs and delay arising therefrom.

3.2.2. In resolving such conflicts, errors or discrepancies, the Contract Documents shall be given preference in the following order: Change Orders, Executed Change Requests, Field Orders, Agreement, Notice to Proceed, Notice of Award, Addenda, Federal Contract Provisions, Supplementary Conditions, Instructions to Bidders, General Conditions, General Requirements, Divisions 2 through 16 of the Specifications and Drawings, Invitation for Bid, CONTRACTORS's Bid, Bonds, Insurance Certificate(s) and Endorsement(s), and Affidavits.

3.2.3. If the issue of priority pertains to Divisions 2 through 16 of the Specifications and the Drawings, figured dimensions shall govern over scaled dimensions, but Work not dimensioned shall be as directed, and Work not particularly shown, identified, sized, or located shall be the same as similar parts that are shown or specified. Further, detail Drawings shall govern over general drawings, larger scale drawings take precedence over smaller scale drawings, Change Order or Change Request Drawings govern over Contract Drawings, and Contract Drawings govern over standard or Shop Drawings. In all cases where notes, specifications, sketches, diagrams, details or schedules in the Specifications or in the Drawings, or between the Specifications and the Drawings, conflict, the higher cost requirement shall be furnished by CONTRACTOR, unless otherwise directed by ENGINEER.

3.2.4. If the issue of priority is due to a conflict or discrepancy between provisions of the Contract Documents and any referenced standard specification, manual, or code of any technical society, organization or association, the provisions of the Contract Documents will take precedence if they are more stringent or presumptively cause a higher level of performance. If there is any conflict or discrepancy between standard specifications, manuals, or codes of any technical society, organization or association, or between Laws or Regulations, the provision with the higher cost requirement shall be binding on CONTRACTOR, unless otherwise directed by ENGINEER.

3.2.5. In accordance with the intent of the Contract Documents, CONTRACTOR recognizes and accepts that compliance with the priority order specified shall not justify an increase in Contract Price or extension in Contract Time.

3.3 Use of Forms Provided

Unless CITY provides to the contrary, only those forms (Change Request Form, Change Order Form, Notice of Award, Notice to Proceed, Application for Payment, Insurance Certificates and Endorsements, Bonds, Bid Form, etc.) provided in the Contract Documents shall be used and no modifications or substitutions shall be allowed.

3.4 Re-use of Documents

Neither CONTRACTOR nor any Subcontractor or Supplier or other person or organization (other than CITY) shall acquire any title to or have ownership rights of any of the Drawings, Specifications or other documents (or copies of any thereof) prepared by or bearing the seal of DESIGN ENGINEER; and they shall not be reused on extensions of the Project or any other project nor shall they be generally published without written consent of CITY.

ARTICLE 4 - AVAILABILITY OF LANDS; PHYSICAL CONDITIONS; REFERENCE POINTS

4.1 Availability of Lands

4.1.1. CITY shall furnish, as indicated in the Contract Documents, the lands upon which the Work is to be performed, rights-of-way and easements, and those other lands which are designated for the use of CONTRACTOR. Easements for permanent structures or permanent changes in existing facilities will be obtained and paid for by CITY, unless otherwise provided in the Contract Documents. Any additional lands, rights-of-way and easements not furnished by CITY that CONTRACTOR deems necessary, including but not limited to requirements for temporary construction facilities, access and egress, or for storage, shall be obtained by CONTRACTOR at no increase in Contract Price or extension in Contract Time, and CONTRACTOR shall confine his operations to those areas furnished or obtained at its expense.

4.1.2. CONTRACTOR shall obtain permits and written approvals (and submit copies to CITY before utilization of those areas) from the appropriate governmental entity or property owner(s), for use of lands not furnished by CITY; and for all lands which include borrow pits, waste and disposal areas, such permits and approvals shall specify their treatment during and at completion of construction.

4.1.3. Access to municipal structures, hydrants, valves, manholes, fire alarms, etc., shall not be obstructed by CONTRACTOR. CONTRACTOR is to make no connections to or operate valves on water mains or otherwise interfere with the operation of the water system, without first giving written notice to and securing written approval from the appropriate governmental entity.

4.2 Physical Conditions (Including Underground Facilities)

4.2.1. The Contract Documents may identify reports of explorations and tests of subsurface conditions at the site, and those drawings of physical conditions in or relating to existing surface and subsurface structures or Underground Facilities owned by CITY which are at or contiguous to the site, that have been utilized by DESIGN ENGINEER in preparation of the Contract Documents. CONTRACTOR may rely upon the accuracy of the technical data in those reports or drawings, but not upon nontechnical data, interpretations or opinions, or for their completeness for CONTRACTOR's purposes. Except as indicated in the preceding sentence and in Paragraphs 4.4 and 4.5, CONTRACTOR shall have full responsibility for physical conditions, and Underground Facilities owned by CITY, shown or indicated in the Contract Documents.

4.2.2. The information and data shown or indicated in the Contract Documents with respect to Underground Facilities at or contiguous to the site is based on information and data furnished to CITY or DESIGN ENGINEER by the owners of such Underground Facilities or by others. CITY, ENGINEER and DESIGN ENGINEER shall not be responsible for the accuracy or completeness of any

such information or data, and, CONTRACTOR shall have full responsibility for reviewing and checking all such information and data.

4.2.3. Unless it prejudices Work already excavated and uncovered, CONTRACTOR shall schedule layout, excavation and uncovering of Work or Underground Facilities a sufficient time in advance to allow ENGINEER's review, and the possible amending or supplementing of the Contract Documents.

4.3 Differing Physical Conditions (including Underground Facilities)

CONTRACTOR shall immediately, after becoming aware thereof, and before the conditions are disturbed (except in a case of an emergency), notify ENGINEER in writing of any subsurface or latent physical conditions, or Underground Facilities, encountered at or contiguous to the site which differ materially from those indicated in the Contract Documents; Underground Facilities not shown or indicated in the Contract Documents encountered at or contiguous to the site; unknown physical conditions encountered or uncovered at or contiguous to the site, of an unusual nature, differing materially from those ordinarily encountered at or contiguous to the site which differ materially from those indicated in the Contract Documents; unknown physical conditions encountered or uncovered at or contiguous to the site, of an unusual nature, differing materially from those ordinarily encountered and not generally recognized as inherent in Work of the character provided for in the Contract Documents.

4.4 Resolution of a Report of Differing Physical Conditions

4.4.1. Promptly after receipt of notice from CONTRACTOR, ENGINEER will review the pertinent conditions, determine the necessity of obtaining additional explorations or tests, and advise CITY in writing of his findings and conclusions. Until such time when CONTRACTOR resumes the affected Work (and at all times thereafter), CONTRACTOR shall be responsible for the safety and protection of the affected Work.

4.4.2. If CITY, with the advice of ENGINEER, concludes that the conditions do materially differ, and that the Contract Documents need to be amended, CITY shall, without invalidating the Agreement and without notice to any surety, by duly executed Change Order or Change Request, order the necessary changes in the Work, as long as CITY has not exercised its rights to terminate the Agreement.

Upon receipt of that order, CONTRACTOR shall promptly proceed or continue with the Work involved pursuant to the conditions stated in the order.

4.4.3. If CITY, with the advice of ENGINEER, concludes that the Contract Documents need to be supplemented only, appropriate minor deviations in the Work shall be authorized by a Change Request duly executed by CITY or a Field Order issued by ENGINEER. CITY's determination that the Contract Documents do not need to be amended shall be final and binding on CONTRACTOR unless CONTRACTOR delivers to CITY written notice of a claim within seven (7) days of receipt of notification of that decision.

4.4.4. If any change in the Work required due to differing physical conditions causes an increase or decrease in CONTRACTOR's cost of or the time required for the performance of all or part of the Work, CITY shall make an adjustment in Contract Price or Contract Time, subject to the provisions of this Article, and Articles 10 and 11.

4.4.5. If the Contract Documents necessitate amending to order changes in the Work due to Underground Facilities, whether they be shown or indicated or newly discovered, CITY shall authorize the required changes in the Work, including any necessary adjustments in Contract Price, by Change Order or Change Request. If those Underground Facilities cause or will cause delays in the performance or extend completion of all or part of the Work, CONTRACTOR shall absorb all related delay, extension or acceleration costs, however caused; except that, if CITY and CONTRACTOR believe that the delays require a change in Contract Time, CITY shall authorize the necessary change in Contract Time. However, an extension in Contract Time, when and if so granted shall be CONTRACTOR's sole and exclusive remedy with respect to CITY for any delay, disruption, interference, extension or hindrance and associated costs, however caused, resulting from variance in the location or configuration of Underground Facilities shown or indicated, or from newly discovered Underground Facilities.

4.4.6. No proposal by CONTRACTOR for an adjustment under this Article, nor claim by CONTRACTOR for an adjustment on account of differing physical conditions, shall be allowed unless CONTRACTOR has given the written notice required in paragraph 4.3.

4.5 Special Requirements for Underground Facilities

CONTRACTOR shall have full responsibility: a) for locating any and all Underground Facilities shown or indicated as to depth and alignment in advance of excavation; b) for identifying the owner of any newly discovered Underground Facility and promptly notifying that owner and ENGINEER of that discovery; c) for shoring, blocking, and protecting Underground Facilities shown, indicated or discovered; d) for coordination of the Work with the owners of all Underground Facilities shown, indicated or discovered; e) for repairing any damage done to the satisfaction of those owners, to the extent that the damage was due to CONTRACTOR's failure to adhere to the requirements of this paragraph or paragraph 4.2.2., or to the fault or negligence of CONTRACTOR; and f) for the safety and protection of any affected Work, and for repairing any damage done to the Work. Except as otherwise provided in paragraphs 4.4.5. and 4.4.6., all costs involved and time required to perform these responsibilities shall be considered as having been included in the Contract Price and in the CONTRACTOR's schedule for the performance of the Work within the Contract Times, even if the Contract Documents need amending to authorize minor deviations or changes in the Work due to those Underground Facilities.

4.6 Reference Points

4.6.1. CITY shall provide the engineering surveys to establish reference points for construction which in ENGINEER's judgment are necessary to enable CONTRACTOR to proceed with the Work. CONTRACTOR shall be responsible for laying out the Work, shall protect and preserve the established reference points and shall make no changes or relocations without the prior written approval of ENGINEER. CONTRACTOR shall report to ENGINEER whenever any reference point is lost or destroyed, or requires relocation because of necessary changes in grades or locations, and shall be responsible for the accurate replacement or relocation of such reference points by professionally qualified personnel.

4.6.2. CONTRACTOR shall promptly, after becoming aware thereof and before performing any affected Work (except in a case of an emergency), notify CITY in writing of any reference points which in CONTRACTOR's judgment need correction to enable CONTRACTOR to proceed with the proper performance of the Work.

4.6.3. In resolving a report of differing reference points, CONTRACTOR shall adhere to the procedures, assume the duties and responsibilities, and accept the conditions outlined in paragraph 4.4 in all respects.

ARTICLE 5 - BONDS AND INSURANCE

5.1 Performance, Payment and Other Bonds

5.1.1. CONTRACTOR shall furnish a Performance Bond and a Payment Bond, each with good and sufficient surety, and each in an amount at least equal to the Contract Price. These Bonds shall be recorded with the clerk of the circuit court of the county where the Project is located no later than the Date of Commencement of the Contract Time. These Bonds shall remain in effect at least until one (1) year after the date when Final Payment becomes due, except as otherwise provided by Laws or Regulations, or the other provisions of the Contract Documents. CONTRACTOR shall also furnish such other Bonds as are required by the Supplementary Conditions. The Performance Bond requirement in the Contract Documents shall inure solely to CITY and its successors or assigns, as obligee, and no other person shall have any right of action based thereon.

5.1.2. All Bonds shall be in accordance with statutory bond provisions in Florida Statutes and all other applicable Laws and Regulations and be in the form prescribed by the Contract Documents. All Bonds shall be executed by such sureties as are licensed to conduct business in the state of Florida and, except as otherwise provided by Laws and Regulations, are named in the current list of Companies Holding Certificates of Authority as Acceptable Sureties on Federal Bonds and as Acceptable Reinsuring Companies" as published in Circular 570 (amended) by the Audit Staff Bureau of Accounts, U.S. Treasury Department. All Bonds signed by an agent must be accompanied by a certified copy of its authority to act.

5.1.3. If the surety on any Bond furnished by CONTRACTOR is declared bankrupt or becomes insolvent or its license to do business in the state of Florida is terminated or it ceases to meet the requirements of the Contract Documents, CONTRACTOR shall within five (5) days thereafter substitute another Bond and surety, both of which shall be in accordance with the Contract Documents and acceptable to CITY.

5.1.4. In addition to the other bonding requirements, the surety(ies) named on the Performance Bond and Payment Bond submitted by Low Bidder pursuant to the Contract Documents shall be subject to the approval of CITY. If CITY has a reasonable objection to the proposed Surety, CITY may request Low Bidder to submit an acceptable substitute without an increase in the Bid price. If Low Bidder declines or is unable to make any such acceptable substitution, CITY may, at its sole option, rescind the Notice of Award, and any award of the Contract to Low Bidder will be of no effect. The refusal or inability to make any such substitution may not constitute grounds for sacrificing its Bid Security.

5.2 Contractor's Insurance - General

5.2.1. The types of insurance CONTRACTOR shall purchase and maintain are Worker's Compensation and Employer's Liability Insurance, Liability Insurance, and Property Insurance, which shall include the specific coverages set forth in this Article, as supplemented in the Supplementary Conditions, and be written for no less than the limits of liability coverage provided in the Supplementary Conditions.

5.2.2. CONTRACTOR shall not commence or continue to perform any work unless it, at its own expense, has in full force and effect all required insurance, and until all insurance Certificates and Endorsements have been filed evidencing the specific insurance coverage required, nor shall any payment for Work performed become due and payable until such Certificates and Endorsements have been filed. The CONTRACTOR shall not permit any Subcontractor, Supplier or other person or organization to perform work on the Project unless the Worker's Compensation Insurance requirements have been complied with by such Subcontractor, Supplier or other person or organization.

5.2.3. Worker's Compensation and Employer's Liability Insurance shall be maintained in effect for the full Warranty Period, even as extended. Property Insurance shall continue and shall not terminate until CITY makes Final Acceptance and Payment for the Work, except as otherwise provided in the General Conditions. Should any coverage approach expiration during the period in which it is to remain in full force and effect, it shall be renewed prior to its expiration.

5.2.4. Insurance coverage shall be placed with satisfactory carriers licensed to do business in the State of Florida and countersigned by a resident agent. Insurers shall have at least an "A" Best's Rating and a Class XI or better financial category in accordance with the most current A. M. Best Company ratings.

5.2.5. At the time indicated in the Instructions to Bidders, as evidence of specified insurance coverage, CONTRACTOR shall provide certificates of insurance evidencing the specific policies issued, the limits of coverage afforded, and the specific endorsements provided, all in accordance with the requirements of the forms prescribed in the Contract Documents, and if none are included, as required by CITY. No alteration or substitution of said insurance certificate forms will be allowed, unless approved by CITY in writing.

5.2.6. If so requested in writing by CITY, CONTRACTOR shall deliver one (1) copy to CITY of each insurance policy purchased by CONTRACTOR pursuant to this Article within thirty (30) days of the request.

5.2.7. All the policies of insurance so required of CONTRACTOR in the Contract Documents shall be endorsed to include as additional insurers: CITY, DESIGN ENGINEER, ENGINEER, their consultants, any subsidiaries or affiliates, and each of their directors, officers, employees, representatives, agents or volunteers. In addition, all the policies of Property Insurance required of CONTRACTOR in the Contract Documents shall be endorsed to include Subcontractors as additional insurers. The insurance afforded to these additional insurers shall be primary insurance. If the additional insurers have other insurance which might be applicable to any loss, the amount of insurance provided under CONTRACTOR's policies of insurance shall not be reduced or prorated by the existence of the other insurance.

5.2.8. All the policies of insurance so required of CONTRACTOR in this Article shall be endorsed to expand coverage as required in this Article, as supplemented in the Supplementary Conditions.

5.2.9. Deductible/self-insured retention amounts shall be subject to approval by CITY, and shall be reduced or eliminated upon written request from CITY. The insurer's cost of defense including attorney's fees (and attorney's fees on appeal) shall not be included within the policy coverage but shall remain the responsibility of insurer.

5.2.10 Nothing contained in these insurance requirements is to be construed as limiting the liability of CONTRACTOR or CONTRACTOR's insurance carriers. It is to be understood that CITY, ENGINEER and DESIGN ENGINEER do not in any way represent that the insurance (or the limits of insurance) specified in this Article (or in the Supplementary Conditions) is sufficient or adequate to protect CONTRACTOR's interests or liabilities, but are merely minimums.

5.2.11 Umbrella Liability Insurance shall not be more restrictive than the underlying insurance policy coverages.

5.2.12 All the policies of insurance (or the certificates or other evidence thereof) required to be purchased and maintained by CONTRACTOR in accordance with the Contract Documents will contain a provision or endorsement that the coverage afforded will not be canceled or materially changed or renewal refused until at least thirty days' prior written notice has been given to CITY and ENGINEER by certified mail.

5.3 Insurance

CITY shall have the option of self-insuring or purchasing and maintaining its own insurance. If CONTRACTOR fails to obtain or renew insurance or fails to maintain insurance in a form required by the Contract Documents, or if any insurance company CONTRACTOR has procured insurance from declares bankruptcy, is declared bankrupt, or if the Insurer loses its "A" policyholder's rating or if its financial size category rating falls below Class XI in the most current A. M. Best's rating, CITY may procure insurance at CONTRACTOR's expense in the coverage amounts required by the Contract Documents and shall be entitled to deduct CITY'S resultant costs from the Contract Price by issuing a Change Order. In lieu of procuring insurance at CONTRACTOR's expense, CITY has the option to stop or suspend the Work or terminate CONTRACTOR's services as provided in Article 15. CITY's actions under this paragraph shall not entitle CONTRACTOR to an increase in Contract Price or an extension of Contract Time.

5.4 Worker's Compensation Insurance and Employer's Liability Insurance

CONTRACTOR shall obtain full Worker's Compensation Insurance coverage for no less than the statutory limits and Employer's Liability Insurance coverage in limits not less than the amounts set forth in the Supplementary Conditions, for all persons whom it employs or may employ in carrying out the Work under the Agreement. This insurance shall be in strict accordance with the requirements of the most current and applicable state Worker's Compensation laws.

5.5 Liability Insurance

5.5.1. CONTRACTOR shall purchase and maintain the liability insurance described herein to provide protection from claims arising out of or resulting from CONTRACTOR's performance of the Work and CONTRACTOR's other obligations under the Contract Documents, whether such performance is by CONTRACTOR, by any Subcontractor or Supplier, by anyone directly or indirectly employed by any of them, or by anyone for whose acts any of them may be liable.

5.5.2. The liability insurance shall include liability insurance applicable to CONTRACTOR's obligations under Articles 6 and 7. CONTRACTOR agrees to pay on behalf of CITY, and to provide and pay a legal defense for, all such claims applicable to CONTRACTOR's obligations under the indemnification provisions in said Articles. CONTRACTOR accepts as adequate compensation for the contractual liability insurance the amount contained in the Contract Documents.

5.5.3. The liability insurance coverage shall include as a minimum each of the following types of insurance:

A. General Liability
   (1) Comprehensive Form.
   (2) Premises-Operations.
   (3) Explosion and Collapse Hazard.
   (4) Underground Hazard.
   (5) Products/Completed Operations Hazard.
   (6) Contractual Insurance.
   (7) Broad Form Property Damage Including Completed Operations.
   (8) Independent Contractors.
   (9) Personal Injury [with Employment Exclusion deleted.]
B. Automobile Liability
   (1) Comprehensive Form Including Loading and Unloading.
   (2) Owned.
   (3) Hired.
   (4) Non-Owned.

5.6 Property Insurance

5.6.1. CONTRACTOR shall purchase and maintain property insurance upon the Work at the site to the full insurable value thereof (subject to such deductible amounts as may be provided in the Supplementary Conditions or required by Laws and Regulations). This insurance shall insure against the perils of fire and extended coverage and shall include "all risk" insurance for physical loss and damage including, without duplication of coverage, lightning, windstorm, rain, hurricane, hail, explosions, riot, sinkholes, flood, theft, vandalism and malicious mischief, collapse and water damage, and such other perils as may be provided in the Supplementary Conditions, and shall include damages, losses and expenses arising out of or resulting from any insured loss or incurred in the repair or replacement of any insured property (including but not limited to fees and charges of engineers, architects, attorneys and other professionals).

If not covered under the "all risk" insurance or otherwise provided in the Supplementary Conditions, CONTRACTOR shall purchase and maintain similar property insurance on portions of the Work stored on and off the site or in transit when such portions of the Work are to be included in an Application for Payment. The property insurance required in this paragraph may have a deductible clause, but said deductible shall not exceed $25,000.00 or the limit set forth, if any, in the Supplementary Conditions.

5.6.2. In the event of loss covered by Property Insurance, the proceeds of a claim shall be paid to CITY, which shall apportion the proceeds between CITY and CONTRACTOR as their interests may appear.

5.6.3. Where applicable, CONTRACTOR shall purchase and maintain adequate flood insurance for Work in designated flood hazard areas as defined by P.L. 93-234 (Flood Disaster Protection Act).

5.6.4. CONTRACTOR shall purchase and maintain such boiler and machinery insurance or additional property insurance as may be required by the Supplementary Conditions or Laws and Regulations.

5.6.5. The risk of loss within the deductible amount if any, in the Property Insurance purchased and maintained pursuant to this Article will be borne by CONTRACTOR.

5.7 Waiver of Rights

5.7.1. CITY and CONTRACTOR waive all rights against each other for all losses and damages caused by any of the perils covered by the policies of insurance provided in response to paragraph 5.6 and any other property insurance applicable to the Work, and also waive all such rights against the Subcontractors, ENGINEER, DESIGN ENGINEER, CITY's, ENGINEER's and DESIGN ENGINEER's consultants and all other parties named as insurers in such policies for losses and damages so caused. Each Sub-agreement between CONTRACTOR and a Subcontractor will contain similar waiver provisions by the Subcontractor in favor of CITY, CONTRACTOR, ENGINEER, DESIGN ENGINEER, CITY's, ENGINEER's and DESIGN ENGINEER's consultants and all other parties named as insurers. None of the above waivers shall extend to the rights that any of the insured parties may have to proceeds of insurance held by CITY, CONTRACTOR, or otherwise payable under any policy so issued.

5.7.2 CITY and CONTRACTOR intend that any policies provided in response to paragraph 5.6 shall protect all of the parties insured and provide primary coverage for all losses and damages caused by the perils covered thereby. Accordingly, all such policies shall contain provisions to the effect that in the event of payment of any loss or damage the insurer will have no rights of recovery against any of the parties named as insurers or additional insurers, and if the insurers require separate waiver forms to be signed by ENGINEER, DESIGN ENGINEER, or CITY's, ENGINEER's, or DESIGN ENGINEER's consultants CITY will obtain the same, and if such waiver forms are required by any Subcontractor, CONTRACTOR will obtain the same.

5.8 Owner May Object to Insurance

5.8.1. Neither CITY's review of the coverage afforded by or the provisions of the policies of insurance purchased and maintained by CONTRACTOR in accordance with this Article, nor CITY's decisions to raise or not to raise any objections about either or both, shall in any way relieve or decrease the liability of CONTRACTOR. If CITY elects to raise an objection to the coverage afforded by or the other provisions of the insurance furnished, CONTRACTOR shall promptly provide to CITY such additional information as CITY may reasonably request, and CONTRACTOR shall remedy any deficiencies in the policies of insurance at once.

5.8.2. CITY's authority to object to insurance shall not in any way whatsoever give rise to any duty on the part of CITY to exercise this authority for the benefit of CONTRACTOR or any other party.

ARTICLE 6 - CONTRACTOR'S RESPONSIBILITIES

6.1 Supervision and Superintendence

6.1.1. CONTRACTOR shall supervise and direct the Work competently and efficiently, devoting such attention thereto and applying such skills and expertise as may be necessary to perform the Work in accordance with the Contract Documents. CONTRACTOR shall be solely responsible for all means, methods, techniques, sequences and procedures of construction, for providing adequate safety precautions, for coordinating all portions of the Work under the Contract Documents, and for enforcement of order and cooperation among CONTRACTOR's employees and all Subcontractors and Suppliers and others having a Sub-agreement for a part of the Work. CONTRACTOR shall be responsible to see that the finished Work complies accurately with the Contract Documents.

6.1.2. CONTRACTOR shall keep on the Work at all times during its progress a competent resident superintendent, who shall not be replaced without written notice to ENGINEER except under extraordinary circumstances. CITY may, at its sole discretion, require replacement of the superintendent, in which case CONTRACTOR shall submit an acceptable replacement at no increase in Contract Price nor extension in Contract Time. The superintendent shall be CONTRACTOR's representative at the site and shall have authority to act on behalf of CONTRACTOR. All communications given to the superintendent shall be as binding as if given to CONTRACTOR. Whenever the superintendent is not present on any particular part of the Work where the ENGINEER may desire to inform the CONTRACTOR relative to interpretation of the plans and specifications or regarding disapproval or rejection of materials or work performed, the ENGINEER may so inform the foreman or other workers in charge of the particular part of the work in reference to which the information is given. Information so given shall be as binding as if given to the superintendent.

6.1.3. The superintendent and similar authorized representatives of any Subcontractor, Supplier or other person or organization shall attend all meetings pertaining to the Work, as requested by CITY or ENGINEER.

6.2 Personnel and Working Hours

6.2.1. CONTRACTOR shall at all times maintain good discipline and order at the site.

6.2.2. CONTRACTOR shall provide competent, qualified personnel to survey and lay out the work (in accordance with any additional provisions included in the General Requirements) and perform construction as required by the Contract Documents. CONTRACTOR is fully responsible to provide a sufficient number of skilled workers and supervisory personnel to perform the Work and insure that the Work is completed within the Contract Time. Failure to fully man the Project with supervisory personnel and skilled workers shall be cause for termination of CONTRACTOR.

6.2.3. Except in connection with the safety or protection of persons or the Work or property at the site or adjacent thereto, and except as otherwise indicated in the Supplementary Conditions, all Work at the site shall be performed during normal working hours, and CONTRACTOR will not permit overtime work or the performance of Work on Saturday, Sunday or any Holiday without CITY's written consent given after prior written notice to ENGINEER. Normal working hours shall be defined as the CONTRACTOR's normal eight hour working period occurring between the hours beginning at 7:00 a.m. and ending at 6:00 p.m., exclusive of Saturdays, Sundays, or Holidays. Work during other than normal working hours may be scheduled by CONTRACTOR if he first obtains written permission from CITY.

The CITY observes the following holidays: New Year's Day, Martin Luther King Jr. Day, Memorial Day, Independence Day, Labor Day, Thanksgiving Day and Day after Thanksgiving, Christmas Eve and Christmas Day. Holidays falling on Saturday will be observed Friday, holidays falling on Sunday will be observed Monday.

6.2.4. CITY shall be entitled to deduct from the Contract Price, by issuing a Change Order, CITY's extra costs incurred in connection with CONTRACTOR's performance of WORK during hours other than normal working hours. Such costs may include, but shall not be limited to, ENGINEER'S charges to CITY while acting as CITY's representative (including charges outside of normal working hours for Construction Manager and Field Representatives) , CITY's costs incurred in the performance of CITY's responsibilities as set forth in the Contract Documents, and other related costs.

6.3 Apprentices

CONTRACTOR's utilization of apprentices shall conform to the provisions of Florida Statutes Chapter 446.

6.4 CONTRACTOR's Responsibilities for Furnishing

Unless otherwise specified in the Contract Documents, CONTRACTOR shall furnish and assume full responsibility for all materials, equipment, labor, transportation, construction equipment and machinery, tools, appliances, fuel, power, light, heat, ventilation, cooling, telephone, water, sanitary facilities, temporary facilities and all other facilities and incidentals necessary for the furnishing, performance, testing, start-up and completion of the Work.

6.5 Items of Material or Equipment

6.5.1. All materials and equipment shall be of good quality and new, except as otherwise provided in the Contract Documents. If required by ENGINEER, CONTRACTOR shall furnish satisfactory evidence (including reports of required tests) as to the kind and quality of materials and equipment.

All materials and equipment shall be handled, stored, applied, installed, connected, erected, used, cleaned and conditioned in accordance with the instructions of the applicable Supplier except as otherwise provided in the Contract Documents; but no provision of any such instructions will be effective to assign to ENGINEER, or any of CITY's or ENGINEER's consultants, agents or employees, any duty or authority to supervise or direct the furnishing or performance of the Work or any duty or authority to undertake responsibility contrary to the provisions of Article 8 or Article 9.

6.5.2. Manufacturers' or Suppliers' warranties for all materials, products and equipment to be furnished by CONTRACTOR and to be incorporated into the completed Work shall be furnished to CITY through CONTRACTOR.

6.5.3. CONTRACTOR shall obtain from Suppliers of all materials, products and equipment, complete information as to any special condition or restriction to be applied in the use of these items. Should the manner or method of installation, specified performance or test results as set forth in the Specifications be contrary to the manufacturer's recommendations for use of the product, CONTRACTOR shall notify ENGINEER in writing of such conflict as soon as reasonably possible, but no later than the time of Shop Drawing submittal including those products. Failure to provide such written notice before proceeding with the Work affected thereby shall be certification by CONTRACTOR that the Specification requirements will be met by the materials, products and equipment, and that the cost and time required to perform or complete the Work affected thereby have been included in the Contract Price and in the schedule for the performance of the Work within the Contract Time.

6.5.4. Data submitted on all equipment shall include complete operation and maintenance instructions (including preventive maintenance and operating requirement data) and parts lists in sufficient detail to facilitate ordering replacements. Such submittals shall conform to any additional requirements provided in the General Requirements.

6.6 Wood Products

Except as may be otherwise provided by Laws or Regulations, pursuant to Florida Statutes Chapter 225, lumber, timber and other forest products specified in the Contract Documents shall be produced and manufactured in Florida whenever such products are available, provided that price, fitness and quality are equal to other available products. This requirement does not apply where plywood is specified for monolithic concrete forms.

6.7 Equivalent Materials and Equipment

6.7.1. Whenever materials or equipment are specified or described in the Drawings or Specifications by using the name of a proprietary item or the name of a particular Supplier, the naming of the item is intended to establish the type, function and quality required. Unless the name is followed by words indicating that no substitution is permitted, materials or equipment of other Suppliers may be accepted by ENGINEER if (a) the proposed substitution was listed on the substitution list provided on the bid form; and b) sufficient information is submitted by CONTRACTOR to allow ENGINEER to determine that the material or equipment proposed is equivalent to that named. If the proposed substitution was not listed on the bid form, CONTRACTOR shall request in writing that CITY waive this requirement. CITY reserves the right to either maintain or waive this requirement. If CITY elects not to waive this requirement, CONTRACTOR shall take immediate action to provide the materials and equipment specified.

6.7.2. Requests for review of substitute items of material and equipment will not be accepted by ENGINEER from anyone other than CONTRACTOR. If CONTRACTOR wishes to furnish or use a substitute item of material or equipment CONTRACTOR shall, within adequate time to allow a proper review without impacting the schedule, make written application to ENGINEER for acceptance thereof, certifying that the proposed substitute will perform adequately the functions called for by the general design, be similar and of equal substance to that specified and be suited to the same use and capable of performing the same function as that specified. The application shall state whether or not acceptance of the substitute for use in the Work will require a change in the Drawings or Specifications to adapt the design to the substitute and whether or not incorporation or use of the substitute in connection with the Work is subject to payment of any license fee or royalty. All variations of the proposed substitute from that specified shall be identified in the application and available maintenance, repair and replacement service shall be indicated. The application shall also contain an itemized estimate of all increases or decreases in (1) the cost of, or the time required to perform any part of the Work, and the corresponding adjustments in Contract Price an Contract Time, resulting directly or indirectly from evaluation and acceptance of the proposed substitute, including, but not as a way of limitation, costs and delays associated with redesign, or claims of other contractors affected by the resulting substitute; and (2) increases or decreases in operating, maintenance, repair, replacement or spare part costs, all of which will be considered by ENGINEER in evaluating the proposed substitute. ENGINEER may require CONTRACTOR to furnish, at CONTRACTOR's expense, additional data about the proposed substitute.

6.7.3. ENGINEER shall be the sole judge of acceptability, and no substitute shall be ordered or installed without ENGINEER's prior written acceptance. However, CITY reserves the right to reject any proposed substitute which would result in an increase in Contract Price or Contract Time, and CITY may require CONTRACTOR to furnish at CONTRACTOR's expense a special performance guarantee or other surety with respect to any substitute. If approval is given, CONTRACTOR shall not be excused from producing Work in conformity with Contract requirements.

6.7.4. ENGINEER will record time required by ENGINEER, DESIGN ENGINEER and their consultants in evaluating substitutions proposed by CONTRACTOR and in making changes in the Drawings or Specifications occasioned thereby. Whether or not ENGINEER accepts a proposed substitute, CITY shall be entitled to deduct from the Contract Price, by issuing a Change Order, CITY's costs including the charges of ENGINEER, DESIGN ENGINEER and their consultants for evaluating any proposed substitute.

6.7.5. The net difference in cost between the substitute item and that specified shall benefit CITY and CONTRACTOR in equal proportions if the substitution was listed on the Bid Form. If the substitution was not listed in the Bid Form, all of the savings will go to CITY. If ENGINEER estimates that the deduction proposed by CONTRACTOR does not, in its opinion, reflect the sharing of costs in the portions described above, this shall be adequate justification to reject the proposed substitution.

6.7.6. CONTRACTOR assumes sole responsibility for verifying that the proposed substitute items are in accordance with the requirements of the Contract Documents, and that the dimensions, arrangement, design and construction details, and all other features of substitute items are suitable for their intended purpose.

6.7.7. In the event that a substitute item differs materially from the specified item of material or equipment, and said difference was not expressly identified in CONTRACTOR's request for the substitution, or the incorporation of the substitute into the Work results in a change(s) to the Work or in the function or general design of the Project, ENGINEER will have authority to require the removal and replacement of said substitute.

6.8 Concerning Subcontractors, Suppliers and Others

6.8.1. CONTRACTOR shall not award Work to Subcontractors in excess of 50 percent of the Contract Price without prior written approval of CITY. CONTRACTOR shall not employ any Subcontractor, Supplier or other person or organization (including but not limited to those who are to furnish the principal items of materials or equipment), whether initially or as a substitute, against whom CITY or ENGINEER may have reasonable objection. A Subcontractor, Supplier or other person or organization identified in writing to CITY and ENGINEER by CONTRACTOR prior to the Notice of Award and not objected to in writing by CITY or ENGINEER prior to the Notice of Award will be deemed acceptable to CITY or ENGINEER. Acceptance of any Subcontractor, Supplier or other person or organization by CITY or ENGINEER shall not constitute a waiver of any right of CITY or ENGINEER to reject defective Work by CONTRACTOR or any Subcontractor, Supplier or any other person or organization. If CITY or ENGINEER after due investigation has reasonable objection to any Subcontractor, Supplier or other person or organization proposed by CONTRACTOR after the Notice of Award, CONTRACTOR shall submit an acceptable substitute. Such Subcontractor, Supplier person or organization shall neither commence nor continue Work after CITY or ENGINEER objects to said entity. In the event that any such reasonable objection and acceptable substitute will cause additional expense or extend performance of the Work, or part thereof, beyond the Contract Time for the Work, or part thereof, CONTRACTOR may make a request for an adjustment in Contract Price or Contract Time. However, any changes in Contract Price made under this paragraph shall exclude any adjustments for any increases in CONTRACTOR's costs in connection with an increase in Contract Time resulting from the reasonable objection and acceptable substitute submitted pursuant to this paragraph. In any such case, the extension in Contract Time so granted, if any, shall be CONTRACTOR's sole and exclusive remedy for delay, disruption, interference, hindrance and

costs thereto. CONTRACTOR shall not be required to employ any Subcontractor, Supplier or other person or organization against whom CONTRACTOR has reasonable objection.

6.8.2. CONTRACTOR shall give prompt written notice to CITY with copy to ENGINEER as to the identity and qualifications (in accordance with Article 10 of the Instructions to Bidders) of any Subcontractor, Supplier or other person or organization to whom CONTRACTOR intends to award Work that was not previously identified in accordance with the Instructions to Bidders, and of CONTRACTOR's intent to remove or replace a Subcontractor, Supplier or other person.

6.8.3. CONTRACTOR shall be fully responsible for all acts and omissions of his Subcontractors and Suppliers and of persons and organizations directly or indirectly employed by them and of persons and organizations for whose acts any of them may be liable to the same extent that CONTRACTOR is responsible for the acts and omissions of persons directly employed by CONTRACTOR. Nothing in the Contract Documents shall create any contractual relationship between CITY or ENGINEER and any Subcontractor or Supplier or other person or organization having a Sub-agreement with CONTRACTOR, nor shall it create any obligation on the part of CITY or ENGINEER to pay or to see to the payment due any Subcontractor, Supplier or other person or organization, except as may otherwise be required by law.

CITY or ENGINEER may furnish to any Subcontractor or other person or organization, to the extent practicable, evidence of amounts paid to CONTRACTOR on account of specific Work done. No Subcontractor, Supplier or other person or organization shall be a third party beneficiary of this Contract.

6.8.4. The divisions and sections of the Specifications and the identifications of any Drawings shall not control CONTRACTOR in dividing the Work among Subcontractors or Suppliers or delineating the Work to be performed by any specific trade. The divisions of the Specifications are complementary, and anything mentioned or shown in a division of the Specifications or in a specific trade Drawing shall be of like effect as if shown in all divisions of the Specifications and in all Drawings. In addition to other requirements in the Contract Documents, Shop Drawings of a specific trade shall be compared to and coordinated with those from other trades by CONTRACTOR before submission to ENGINEER.

6.8.5. All Work performed for CONTRACTOR by a Subcontractor, Supplier or other person or organization will be pursuant to an appropriate Sub-agreement between CONTRACTOR and the Subcontractor, Supplier or other person or organization which specifically binds the Subcontractor, Supplier or other person or organization to the applicable terms and conditions of the Contract Documents for the benefit of CITY.

6.8.6. If requested in writing by CITY, CONTRACTOR shall deliver to CITY a copy of each Sub-agreement with a Subcontractor, Supplier or other person or organization performing a part of the Work within seven (7) days of CITY's request.

6.9 Patent Fees and Royalties

CONTRACTOR shall pay all license fees and royalties and assume all costs incident to the use in the performance of the Work or the incorporation in the Work of any invention, design, process, product or device which is the subject of patent rights or copyrights held by others. If a particular invention, design, process, product, or device is specified in the Contract Documents for use in the performance of the Work, and its use is subject to patent rights or copyrights calling for the payment of any license fee or royalty to

others, it shall remain the responsibility of CONTRACTOR to assume all costs incident to the use in the performance of the Work or the incorporation in the Work of said invention, design, process, product or device.

Whenever CONTRACTOR is required or desires to use any design, device, material or process covered by letters, patent, trademark or copyright, the right for such use shall be provided for by suitable legal agreements with the patentee or owner, and a copy of this Agreement shall be filed with ENGINEER. However, whether or not such agreement is made or filed as noted, CONTRACTOR and CONTRACTOR's surety in all cases shall indemnify and hold harmless and defend CITY and ENGINEER and anyone directly or indirectly employed by either of them from and against all claims, damages, losses and expenses (including but not limited to charges of engineers, architects, other professionals and attorneys' fees and attorneys' fees on appeal and all costs of defense or appeal) arising out of any infringement of letters, trademark, patent rights or copyrights incident to the use in the performance of the Work or resulting from the incorporation in the Work of any invention, design, process, product or device not specified in the Contract Documents, and shall defend all such claims in connection with any alleged infringement of such rights.

6.10 Permits

Unless otherwise provided in the Contract Documents, CONTRACTOR shall obtain and pay for all construction permits and licenses. CONTRACTOR shall pay all governmental charges and inspection fees necessary for the prosecution of the Work, which are applicable at the time of opening of Bids. CONTRACTOR shall pay all charges of utility service companies for utilities service to accomplish the Work. If CONTRACTOR fails to obtain or renew any permit or license required by this paragraph, CITY has the option of stopping or suspending the work or terminating the CONTRACTOR's services or procuring any permit or license directly. CITY shall be entitled to deduct CITY's resultant costs from the Contract Price by issuing a Change Order. CONTRACTOR shall meet all requirements of all permits and licenses.

6.11 Laws and Regulations

6.11.1 CONTRACTOR shall give all notices and comply with all Laws and Regulations applicable to the Work. If CONTRACTOR observes that the Contract Documents are at variance therewith, CONTRACTOR shall give ENGINEER prompt written notice thereof, and any necessary changes shall be adjusted by an appropriate Change Order (subject to the provisions of Articles 3, 10, and 11). If CONTRACTOR performs any Work knowing or having reason to know that it is contrary to such Laws or Regulations and without such notice to ENGINEER, CONTRACTOR shall bear all costs arising therefrom. CONTRACTOR shall indemnify and hold harmless CITY for all claims, fines, damages, losses and expenses (including but not limited to charges of engineers, architects, other professionals and attorneys' fees and attorneys' fees on appeal and all costs of defense or appeal) arising out of CONTRACTOR's failure to comply with the terms of this paragraph.

6.11.2 CONTRACTOR shall pay all sales, consumer, use and other taxes required to be paid by it in accordance with the Laws and Regulations of the place of the Project.

6.12 Use of Premises

6.12.1 CONTRACTOR shall confine construction equipment, the storage of materials and equipment and the operations of workmen to areas permitted by Laws and Regulations, rights-of-way, permits and easements or the requirements of the Contract Documents, and shall not unreasonably encumber the premises with construction equipment or other materials or equipment. CONTRACTOR shall

assume full responsibility for any damage to any such property, or to the owner or occupant thereof or of any other property, caused or alleged to have been caused by or incident to the execution of this Work. CONTRACTOR shall promptly attempt to settle with such other party by agreement or otherwise resolve the claim by arbitration or at law. CONTRACTOR shall, to the fullest extent permitted by Laws and Regulations, indemnify, defend and hold CITY and ENGINEER harmless from and against all claims, damages, losses and expenses (including but not limited to charges of engineers, architects and other professionals, and attorneys' fees and attorneys' fees on appeal and all costs of defense or appeal) arising directly, indirectly or consequentially out of any action, legal or equitable, brought by any such other party against CITY, DESIGN ENGINEER or ENGINEER to the extent based on a claim arising out of CONTRACTOR's performance of the Work.

6.12.2 Notwithstanding the designation of Contract limits or the indication of temporary fences or barricades, the provisions of the Contract Documents governing certain phases or portions of the Work, such as trenching and landscaping, may require that certain operations be carried out beyond such limits. Those operations, if required beyond such designated limits, shall be scheduled in such a manner as to cause or occasion a minimum of inconvenience or disturbance to or interference with the normal operation of CITY abutters and the public. CONTRACTOR shall obtain CITY's prior approval and all necessary approvals from others, governmental entities and utility companies for such operations, and prosecute such operations expeditiously and restore the affected property to its original condition immediately upon completion of such operations, unless otherwise specified in the Contract Documents. All those areas on which temporary driveways or walks are routed shall be restored to their original condition, immediately when normal routing can be reinstated, unless otherwise specified in the Contract Documents. Pumping, draining and control of surface and groundwater shall be carried out so as to avoid endangering the Work or any adjacent facility or property, or interrupting, restricting or otherwise infringing or interfering with the use thereof.

6.12.3 Except as specifically arranged with the owners of adjacent premises, CONTRACTOR shall avoid any encroachment on adjacent premises. It is specifically agreed that CONTRACTOR shall repair and make good any damage to adjacent premises or improvements thereon caused by its operation, including any damage or loss to the tenant of such adjoining premises or to the owners thereof, whether to buildings, stocks of merchandise, trade fixtures, or otherwise.

6.12.4 During the progress of the Work, and as directed by the CITY or its representatives, CONTRACTOR shall keep the premises free from accumulations of waste materials, rubbish and other debris resulting from the Work. At the completion of the Work CONTRACTOR shall remove all waste materials, rubbish and debris from and about the premises as well as all tools, appliances, construction equipment and machinery, and surplus materials, and shall leave the site clean and ready for occupancy by CITY. CONTRACTOR shall restore to original condition all property not designated for alteration by the Contract Documents.

6.12.5 CONTRACTOR shall not load or permit any part of any structure to be loaded in any manner that will endanger the structure, nor shall CONTRACTOR subject any part of the Work or adjacent property to stresses or pressures that will endanger it.

6.13 Record Documents

Contractor shall maintain in a safe place at the site, one (1) record copy of all drawings, specifications, addenda, change orders, change requests, correspondence, field test records, contractor's daily reports and construction photographs, and written interpretations and clarifications in good order, and annotated to

show all changes made during construction. These record documents, together will all approved samples and shop drawings will be available to ENGINEER for reference.

The record drawings shall be marked up as the work progresses to reflect current conditions and shall become the "as-built" plans. The revisions are to be indicated in a neat, well-organized manner and are to include the elevation and plan location of any utilities, structures, etc., encountered or installed. A "record" survey book will be kept and shall include the following items:

1. The location and elevation of all existing utilities, structures, etc. encountered.
2. The finished product location and elevation of all utilities and structures installed, including, but not limited to, fire hydrants, catch basin and manhole lids and inverts, and valve boxes.

All record notes shall be kept in book(s) designated "record" and no other survey notes will be kept in such books.

Contractor will be required to review with ENGINEER the status of the as-built plans and the "record" survey notes in connection with ENGINEER'S evaluation of an application for payment.

Failure to maintain record documents current shall be just cause to recommend withholding of payments for work performed.

Upon completion of the work, ENGINEER shall deliver to the Contractor a reproducible set of updated contract plans. CONTRACTOR will transfer all his as-built information to these reproducible's and deliver the resultant as-built set of plans, together with the record survey book to ENGINEER for CITY.

6.14 Safety and Protection

6.14.1 CONTRACTOR shall be solely and completely responsible for initiating, maintaining and supervising all safety precautions and programs in connection with the Work. CONTRACTOR shall take all necessary precautions for the safety of, and shall provide the necessary protection to prevent damage, injury or loss to all employees on the Work and other persons (including but not limited to the general public) who may be affected thereby; all the Work and all materials or equipment to be incorporated therein, whether in storage on or off the site; and other property at the site, adjacent thereto, or utilized by CONTRACTOR including but not limited to trees, shrubs, lawns, walks, pavements, roadways, structures, Underground Facilities and utilities not designated for removal, relocation or replacement in the course of construction regardless of whether or not such other property is indicated in the Contract Documents. CONTRACTOR's duties and responsibilities for the safety and protection of the Work shall continue until such time as ENGINEER issues a notice to CITY and CONTRACTOR that the Work is acceptable.

6.14.2 All damage, injury or loss to any property caused, directly or indirectly, in whole or in part, by CONTRACTOR, any Subcontractor, Supplier or anyone directly or indirectly employed by any of them or anyone for whose acts any of them may be liable, shall be remedied by CONTRACTOR at his sole cost, except damage or loss solely attributable to the fault of the Drawings or Specifications or the acts or omissions of CITY or ENGINEER or anyone employed by either of them or anyone for whose acts either of them may be liable.

6.14.3 CONTRACTOR shall comply with all applicable Laws and Regulations of any governmental entity having jurisdiction for the safety of persons or property or to protect them from damage, injury or loss including, but not limited to, OSHA (Public Law 91-596) and the Contract Work Hours and

Safety Standards Act (Public Law 91-54); and shall erect and maintain all necessary safeguards for such safety and protection.

CONTRACTOR shall designate a responsible member of his organization at the site whose duties shall be preventing accidents and insuring compliance with all applicable safety regulations. This person shall be CONTRACTOR's superintendent unless otherwise designated in writing by CONTRACTOR to CITY.

6.14.4 When the performance of the Work requires the use of shoring, sheet piling and other special construction related to excavation, and when required by Laws or Regulations, CONTRACTOR shall cause the design of said shoring, sheet piling and other special construction to be performed by a registered professional engineer licensed in the State of Florida. CONTRACTOR shall submit, as a Shop Drawing, a certification by the registered engineer, stating that it has complied with this requirement. CONTRACTOR shall meet all requirements of such designs prepared by a registered engineer. In addition to any requirements imposed by law, CONTRACTOR shall shore up, brace, underpin, and protect as may be necessary, all foundations and other parts of all existing structures adjacent to and adjoining the site of the Work which are in any way affected by the excavations or other operations connected with the performance of the Work.

6.14.5 CONTRACTOR shall notify owners of adjacent property and of Underground Facilities and utility owners when prosecution of the Work may affect them, and shall cooperate with them in the protection, removal, relocation and replacement of their property. Whenever any notice is required to be given by CITY or CONTRACTOR to any adjacent or adjoining landowner or other party before commencement of any Work, such notice shall be given by CONTRACTOR.

6.14.6 CONTRACTOR shall take reasonable care during construction to avoid damage to vegetation. Ornamental shrubbery and tree branches shall be temporarily tied back, where appropriate, to minimize damage. Trees which receive damage to branches shall be trimmed of those branches to improve the appearance of the tree. Tree trunks receiving damage from equipment shall be treated with a tree dressing.

6.14.7 At all times CONTRACTOR shall, and shall cause his Subcontractors and Suppliers to, carefully protect its and their Work, materials, equipment, and supplies against damage or injury from the weather. If in the opinion of ENGINEER any of the above has been damaged or injured by reason of failure on the part of CONTRACTOR, any Subcontractor or Supplier to perform according to the requirements of this provision, said Work, materials, equipment and supplies shall be removed and replaced at the expense of CONTRACTOR.

6.15 Emergencies

In emergencies affecting the safety or protection of persons or the Work or property at the site or adjacent thereto, CONTRACTOR, without special instruction or authorization from ENGINEER or CITY, is obligated to act to prevent threatened damage, injury or loss. CONTRACTOR shall give CITY prompt written notice if CONTRACTOR believes that any significant changes in the Work have resulted because of the action taken in response to an emergency. If CITY determines that changes are required, CITY shall authorize the changes by Change Order or Change Request. If the emergency was not due to the fault or negligence of CONTRACTOR, or any Subcontractor or Supplier or anyone for whose acts any of them may be liable and the changes cause an increase or decrease in CONTRACTOR's cost or the time required to perform any part of the Work, CITY shall make an adjustment in Contract Price or Contract Time, as provided in Articles 10 & 11.

6.16 Shop Drawings and Samples

6.16.1 After checking and verifying all field measurements and after complying with applicable procedures specified in the General Requirements, CONTRACTOR shall submit to DESIGN ENGINEER for review and approval in accordance with the accepted schedule of Shop Drawing submissions, five (5) copies for use by CITY, DESIGN ENGINEER and ENGINEER plus additional copies as required by CONTRACTOR (unless otherwise specified in the Contract Documents) of all Shop Drawings, which shall have been checked by and stamped with the approval of CONTRACTOR and identified as DESIGN ENGINEER and ENGINEER may require. CONTRACTOR shall submit a copy of the transmittal letter providing drawing numbers and titles for each item included in a Shop Drawing submittal to ENGINEER at the same time each submittal is made to DESIGN ENGINEER.

6.16.2 CONTRACTOR shall also submit to ENGINEER for review and approval, with such promptness as to cause no delay in the Work, all samples required by the Contract Documents. All samples shall have been checked by and stamped with the approval of CONTRACTOR, identified clearly as to material, manufacturer, any pertinent data such as catalog numbers and the use for which it is intended.

6.16.3 CONTRACTOR's stamp of approval on any Shop Drawing or sample shall specifically indicate in writing, or if not indicated in writing, shall constitute a representation that CONTRACTOR has either determined and verified all quantities, dimensions, field construction criteria, materials, catalog numbers, specified performance criteria, and similar data or assumes full responsibility for doing so, and that CONTRACTOR has reviewed or coordinated each Shop Drawing or sample with the requirements of the Work and the Contract Documents.

6.16.4 At the time of each submission, CONTRACTOR shall in writing call ENGINEER's attention to any deviations that the Shop Drawings or samples may have from the requirements of the Contract Documents, and, in addition, shall cause a specific notation to be made on each Shop Drawing submitted of each such variation.

6.16.5 DESIGN ENGINEER will review Shop Drawings and samples and return CONTRACTOR's submittals stamped with the following notation, as appropriate:

NO EXCEPTION TAKEN	[ ]
FURNISH AS CORRECTED	[ ]
REVISE AND RESUBMIT	[ ]
REJECTED	[ ]

Corrections or comments made on the shop drawings during this review do not relieve CONTRACTOR from compliance with requirements of the drawings and specifications. This check is only for review of the general conformance with the design concept of the project and general compliance with the information given in the contract documents. The contractor is responsible for: Confirming; and correlating all quantities and dimensions; selecting fabrication processes and techniques of construction; coordinating his or her work with that of all other trades and performing all work in a safe and satisfactory manner."

DESIGN ENGINEER's review and approval will be only for conformance with the design concept of the Project and for compliance with the information given in the Contract Documents and shall not extend to the accuracy of other matters that may be contained in the submittals, including but not limited to such matters as dimensions, quantities, performance of equipment and systems designed

by CONTRACTOR, engineering design furnished by CONTRACTOR, CONTRACTOR's means, methods, techniques, sequences or procedures of construction (except where a specific means, method, technique, sequence, or procedure of construction is indicated in or required by the Contract Documents) or to safety precautions or programs incident thereto, the correctness of which shall remain the sole responsibility of CONTRACTOR. The review and approval of a separate item as such will not indicate approval of the assembly in which the item functions.

CONTRACTOR shall make any corrections required by the DESIGN ENGINEER and shall return the required number of corrected copies of Shop Drawings and resubmit new samples for review. CONTRACTOR shall direct specific attention in writing to revisions other than the corrections called for by DESIGN ENGINEER on previous submittals.

6.16.6 DESIGN ENGINEER's review and approval of Shop Drawings or samples shall not relieve CONTRACTOR from responsibility for any variation from the requirements of the Contract Documents unless CONTRACTOR has in writing called DESIGN ENGINEER's attention to each such variation at the time of submission and DESIGN ENGINEER has given written approval of each such variation by a specific written notation thereof incorporated in or accompanying the Shop Drawing or sample approval; nor will any approval by DESIGN ENGINEER relieve CONTRACTOR from responsibility for errors or omissions in the Shop Drawings or from responsibility for having complied with the provisions of paragraph 6.16.3.

6.16.7 Where a Shop Drawing or sample is required by the Specifications, no related Work shall be commenced until the submittal has been returned by DESIGN ENGINEER and noted "No Exception Taken" or "Furnish As Corrected".

6.16.8 All costs incurred in connection with DESIGN ENGINEER's or ENGINEER's review and return of a particular Shop Drawing or sample submission after DESIGN ENGINEER's second time review shall be borne by CONTRACTOR, including DESIGN ENGINEER's charges to CITY under the terms of their agreements with CITY. CITY shall be entitled to deduct these costs from the Contract Price by issuing a Change Order.

6.16.9 In reviewing Shop Drawings or samples, DESIGN ENGINEER shall be allowed (thirty) 30 days from the date DESIGN ENGINEER receives the submittal or re-submittal from CONTRACTOR to return the submittal in accordance with this Article, unless otherwise provided in the Contract Documents. DESIGN ENGINEER's review and return of a Shop Drawing or sample within the time allowed shall not justify an increase in Contract Price or an extension in Contract Time. Any delay in connection with CONTRACTOR's submittal and any resubmittal of a particular Shop Drawing or sample shall represent delays under the control of CONTRACTOR and shall not justify an increase in Contract Price or an extension in Contract Time.

6.17 Continuing the Work

CONTRACTOR shall carry on the Work and maintain the Progress Schedule during all disputes or disagreements with CITY. No Work shall be delayed or postponed pending resolution of any disputes or disagreements, except as CONTRACTOR and CITY may otherwise agree in writing. Suspension of the Work by CONTRACTOR during any dispute or disagreement with CITY shall entitle CITY to terminate the CONTRACT for cause, except as otherwise provided in Article 15.

6.18 Indemnity

6.18.1 To the fullest extent permitted by law, CONTRACTOR shall indemnify, hold harmless and defend (provide and pay for legal defense) CITY, DESIGN ENGINEER, ENGINEER and their consultants, and each of their directors, officers, agents, and employees from and against all claims, damages, losses, expenses, and other costs, including costs of defense and attorneys' fees, and cost and attorney's fees on appeal, arising in any manner out of, or resulting from, or in connection with the performance of the Work, both on and off the job site, provided that any of the foregoing (1) is attributable to personal injury, bodily injury, sickness, disease or death, or to injury to or destruction of tangible property (other than the Work itself), including the loss of use resulting therefrom, and (2) is caused in whole or in part by any act or omission of CONTRACTOR, any Subcontractor, any Supplier, anyone directly or indirectly employed by any of them or anyone for whose acts or omissions any of them may be liable, regardless of whether or not caused in part by any act or omission of a party indemnified hereunder.

6.18.2 In any and all claims against the indemnified parties by any employee of CONTRACTOR, any Subcontractor, any Supplier, anyone directly or indirectly employed by any of them or anyone for whose acts any of them may be liable, the indemnification obligation under paragraphs 6.18.1 and 6.18.4 shall not be limited in any way by any limitation on the amount or type of damages, compensation, or benefits payable, by or for CONTRACTOR, or any Subcontractor, or any supplier, or other person under workers' compensation acts, disability benefit acts, or other employee acts.

6.18.3 The obligations of CONTRACTOR under paragraphs 6.18.1 and 6.18.4 shall not extend to the liability of DESIGN ENGINEER, ENGINEER and their consultants, and each of their directors, officers, employees, and agents arising out of, or resulting from, or in connection with the preparation or approval of maps, Drawings, opinions, reports, surveys, designs or specifications, providing that the foregoing were the sole and exclusive cause of the loss, damage, or injury.

6.18.4 CONTRACTOR shall also indemnify and hold harmless and defend (provide and pay for legal defense) CITY and ENGINEER and their consultants, and each of their directors, officers, employees, and agents from and against all losses, expenses, damages (including damages to the work itself), attorneys' fees, and other costs (including costs and attorney's fees on appeal), which any of them may incur with respect to the failure, neglect, or refusal of CONTRACTOR to faithfully perform the Work and/or the CONTRACTOR's obligations under the Agreement. Such costs, expenses, and damages shall include all costs including attorneys' fees and costs and attorneys' fees and costs on appeal incurred by the indemnified parties in any lawsuit to which they are a party.

6.18.5 At CITY's sole option and utilizing attorneys agreeable to CITY, CONTRACTOR shall defend all suits or claims as set out in this paragraph 6.18.

6.18.6 In the event that CITY incurs costs contrary to this indemnification agreement, CITY shall be entitled to deduct these costs from the Contract Price by issuing a Change Order.

6.19 Progress of the Work

6.19.1 If ENGINEER determines that CONTRACTOR is failing to maintain progress of the Work in accordance with the Progress Schedules and the General Requirements, CONTRACTOR shall take steps as may be necessary to improve his progress, and ENGINEER may require him to increase his work force, or hours, or days of work, or the amount of construction plant or all of them, and to submit to ENGINEER for approval such supplementary schedule or schedules as may be deemed

necessary to demonstrate the manner in which the requisite progress will be regained and maintained, all without additional cost to CITY.

6.19.2 Failure of CONTRACTOR to comply with the requirements of ENGINEER under this Article shall be grounds for determination by ENGINEER that CONTRACTOR is not prosecuting the Work with such diligence as will insure completion within the time specified. ENGINEER will then so inform CITY. CITY may thereupon suspend the Work or terminate CONTRACTOR's services should CONTRACTOR fail to comply with the above paragraph.

6.20 Project Meetings

6.20.1 The CONTRACTOR along with appropriate subcontractors shall attend Project Meetings requested by ENGINEER or CITY for the purpose of discussing and resolving matters concerning the various elements of the Work. Representatives attending such meetings shall have the authority to bind their respective entities to any decisions made. CONTRACTOR shall prepare minutes of the meeting and distribute copies of such minutes within five (5) calendar days to each participant for review and approval.

Participants shall review the above mentioned minutes and, if a discrepancy is found notify the other participants in writing within one week of receipt of the minutes. If CONTRACTOR and/or his subcontractors fail to attend a meeting, CITY shall be entitled to deduct the costs of CITY, COUNTY, ENGINEER, and DESIGN ENGINEER representatives attending the meeting from the CONTRACT PRICE by issuing a Change Order.

6.20.2 CONTRACTOR shall submit for the Project Meeting a summary bar chart of the work activities anticipated for the following fourteen days. This schedule will be used by the ENGINEER for the planning of testing and inspection and shall be an item of discussion at the Project Meeting.

6.21 **CONTRACTOR** Not Agent of **CITY**

CONTRACTOR shall perform all Work under this Agreement as an Independent Contractor and shall not be considered an agent of CITY, nor shall CONTRACTOR's Subcontractors or Suppliers or employees be considered agents of CITY. CONTRACTOR and not CITY shall be solely responsible to any and all Subcontractors and Suppliers and all those employed by them for their costs, expenses, fees and profits, if any, in performing the Work.

6.22 Inspection and Audit

6.22.1 CITY shall have access to the Work and the right to audit all of CONTRACTOR's books, ledgers, records, correspondence, instructions, drawings, receipts, vouchers, memoranda, and other documents pertinent to all Cost and Pricing Data used by Contractor in the determination of CONTRACTOR'S Bid for the Work, in pricing, negotiating or costing Work covered by a Change Order, Change Request or claim, or otherwise relating to the Work, and CONTRACTOR shall preserve and make available at CONTRACTOR's office at all reasonable times all such records for a period of five (5) years after Final Payment.

6.22.2 In the event of termination, the records relating to the Work, or part thereof, affected by such termination shall be made available for five (5) years after the termination. Records pertaining to claims, to litigation or the settlement of claims arising under or relating to the performance of the Work shall be made available until disposition of such appeals, litigation, or claims.

6.22.3 CONTRACTOR shall insert a provision containing all the requirements of paragraph 6.22, including this paragraph 6.22.3, in all Sub-agreements between CONTRACTOR and Subcontractors or Suppliers or other persons, altering the paragraph only as necessary to identify properly the contracting parties.

6.23 Truth-In-Negotiation

6.23.1 CONTRACTOR warrants that all bid line items are true, complete and accurate and include all costs, overhead, profit and all other amounts associated with such items and may be relied upon by CITY when making additions or deductions to the Contract Price. CONTRACTOR further warrants that all Cost and Pricing Data provided to ENGINEER and CITY during the term of the Agreement shall be complete, accurate and current when provided. Should there be any changes in the Cost and Pricing Data previously submitted, the CONTRACTOR shall notify and provide the new information to ENGINEER and CITY immediately. CITY shall be entitled to issue an appropriate Change Order to adjust the Contract Price and Contract Time on account of corrections to inaccurate or incomplete information provided by CONTRACTOR.

6.23.2 Despite any provisions in the Contract Documents to the contrary, any amounts paid by CITY to CONTRACTOR in excess of what it is entitled under the Contract Documents shall be reimbursed by CONTRACTOR to CITY. The making of Final Payment to Contractor shall not be a waiver of City's right to reimbursement from Contractor nor shall it discharge Contractor's obligation to refund the overpayment. The terms of paragraph 6.23 shall survive the City's making Final Payment.

6.23.3 CONTRACTOR shall insert a provision containing all the requirements if paragraph 6.23, including this paragraph 6.23.3, in all Sub-agreements between CONTRACTOR and Subcontractors or Suppliers or other persons, altering the paragraph only as necessary to identify properly the contracting parties.

6.24 Correspondence

All CONTRACTOR's correspondence shall have identification numbers assigned by CONTRACTOR. The identification numbers shall be sequential and assigned chronologically such that each CONTRACTOR's submission can be individually identified by reference to the assigned identification number. The numbering system must be approved by ENGINEER. Any correspondence not so identified may not be accepted by ENGINEER.

6.25 Protection of Historical Properties

6.25.1 CONTRACTOR shall comply with Florida's Archives and Historical Act (Florida Statutes Chapter 267) and the regulations of the local historic preservation board as applicable and protect against the potential loss or destruction of significant historical or archaeological data, sites, and properties in connection with the Work.

6.25.2 CONTRACTOR shall be responsible for reporting immediately to the governmental entity or agency with jurisdiction any archaeological features which are encountered or unearthed during the performance of the Work, and for protecting same to the satisfaction of such governmental entity or agency. CONTRACTOR shall absorb all related delay, extension or acceleration costs, however caused, except that if CITY and CONTRACTOR believe the delays require an extension in Contract Time, CITY shall authorize the necessary change in Contract Time only.

6.26 Responsibility for Connecting to Existing Services and Utilities

At all points where the Work constructed by CONTRACTOR connects to existing utilities and services, the actual Work of making the necessary connection to the existing service or utility shall be arranged for by CONTRACTOR at no expense to CITY (unless specifically indicated otherwise).

Services and utilities included within (but not limited to) this responsibility are roads, ditches, electrical, sewer, mechanical utilities, water, reuse, fencing, etc. Connections shall be made at a time that will result in the least possible interference with existing services.

6.27 Additional Provisions

6.27.1 CONTRACTOR shall be responsible for all cutting of masonry and other materials, and all fitting, drilling or patching which may be necessary to complete the Work or to make its several parts fit together properly, whether or not such Work is expressly specified in the Contract Documents.

6.27.2 CONTRACTOR shall be responsible for preparing and delivering to ENGINEER, on a daily basis, reports recording labor and equipment available and utilized, and materials and equipment received each day, on a form acceptable to ENGINEER. If CONTRACTOR fails to submit reports daily, ENGINEER may withhold approval of any Application for Payment until such time as CONTRACTOR submits the required information. CONTRACTOR shall make available any such records as requested by ENGINEER to verify that the reports are accurate.

6.27.3 CONTRACTOR shall submit to ENGINEER at the beginning of each work shift, a list of specific items requiring final inspection, monitoring, or witnessing by ENGINEER.

ARTICLE 7 - WORK BY OTHERS

7.1 Related Work At Site

7.1.1 CITY may perform other work at the site by CITY's own forces, provide for or allow other work to be performed by other owners, or let other direct contracts for other work. If the fact that such other work is to be performed was not noted in the Contract Documents, written notice thereof will be given to CONTRACTOR prior to starting any such other work.

7.1.2 CONTRACTOR shall afford each owner and contractor (or CITY, if CITY is performing the additional work with CITY's employees) proper and safe access to the site and a reasonable opportunity for the introduction and storage of materials and equipment and the execution of such work, and shall properly connect and coordinate the Work with theirs. CONTRACTOR shall do all cutting, fitting and patching of the Work that may be required to make it integrate properly with such other work. CONTRACTOR shall not endanger any work of others by cutting, excavating or otherwise altering their work and will only cut or alter their work with the written consent of ENGINEER and the others whose work will be affected. The Contractor is not entitled to exclusive use of the site.

7.1.3 If any part of CONTRACTOR's Work depends for proper execution or results upon the work of CITY or any such other contractor or owner, CONTRACTOR shall inspect and promptly report to ENGINEER in writing any delays, defects or deficiencies in such work that render it unavailable or unsuitable for such proper execution and results. CONTRACTOR's failure to so report will constitute an acceptance of the other work as fit and proper for integration with CONTRACTOR's

Work except for latent or nonapparent defects and deficiencies in the other work. Wherever Work to be performed by CONTRACTOR is dependent upon the work of any separate contractor, CONTRACTOR shall: (1) coordinate his Work with the dependent work; (2) provide necessary dependent data and requirements; (3) supply and/or install items to be built into dependent work of others; (4) make provisions for dependent work; (5) check and verify dependent dimensions of previously placed work; (6) notify ENGINEER of previously placed dependent work or dependent dimensions which are unsatisfactory or will prevent a satisfactory installation of any such Work; and (7) not proceed with any such Work until any unsatisfactory dependent conditions have been corrected. Installation of Work by CONTRACTOR or by a Subcontractor in any given area shall constitute acceptance by CONTRACTOR or by such Subcontractor of all previously placed dependent work, subject to the exceptions previously noted.

7.1.4 If CITY contracts with others for the performance of other work at the site, the person or organization with the authority and responsibility for coordination of the activities among the various prime contractors may be identified in the Supplementary Conditions, and the specific matters to be covered by such authority and responsibility may be itemized, and the extent of such authority and responsibilities may be provided, in the Supplementary Conditions. Unless otherwise provided in the Supplementary Conditions, coordination with other prime contractors will be the responsibility of each prime contractor and neither CITY nor ENGINEER shall have any authority or responsibility in respect of such coordination.

7.2 Mutual Duties and Responsibilities

7.2.1. Should CONTRACTOR cause damage to the work or property of any separate contractor or owner performing work at or contiguous to the site, or should any claim arising out of CONTRACTOR's performance of Work at or contiguous to the site be made by any separate contractor or utility owner against CONTRACTOR, CITY, ENGINEER, or DESIGN ENGINEER, CONTRACTOR shall promptly attempt to settle with such separate contractor or utility owner by agreement, or to otherwise resolve the dispute at equity or at law. CONTRACTOR shall, to the fullest extent permitted by Laws and Regulations, hold harmless, defend and indemnify CITY, ENGINEER, DESIGN ENGINEER, and their consultants, directors, officers, agents, and employees from and against all claims, damages, losses, costs and expenses (including attorney's fees and attorney's fees on appeal) arising directly, indirectly or consequentially out of any action, legal or equitable, or resulting from damage to the Work of others caused by CONTRACTOR's performance of the Work.

7.2.2. Should any separate contractor or owner cause damage to the Work or property of CONTRACTOR, or should the performance of work by any separate contractor or owner at or contiguous to the site give rise to any other claim by CONTRACTOR, CONTRACTOR shall promptly attempt to settle with such separate contractor or owner by agreement, or to otherwise resolve the dispute at equity or at law. CONTRACTOR shall not institute any action, legal or equitable, against CITY, ENGINEER, DESIGN ENGINEER, or their consultants directors, officers, agents, and employees or permit any action against them to be maintained and continued in its name or for its benefit in any court or before any arbiter which seeks to impose liability or recover damages from CITY, ENGINEER, DESIGN ENGINEER or their consultants, directors, officers, agents, or employees on account of these.

7.2.3. In the event that CITY incurs costs contrary to the provisions of this paragraph, CITY will be entitled to deduct these costs from the Contract Price by using a Change Order.

7.3 Extensions in Contract Time

7.3.1. If CONTRACTOR is delayed at any time in performing or furnishing the Work by any act or neglect of another contractor or entity performing work at the site noted in the Contract Documents, CONTRACTOR may request an extension in Contract Time; if CITY believes that the delay requires an adjustment in Contract Time, CITY shall authorize the necessary extension of Contract Time. However, an extension in Contract Time(s), if so granted, shall be CONTRACTOR's sole and exclusive remedy with respect to CITY, ENGINEER, and DESIGN ENGINEER, and their consultants, agents and employees for any delay, disruption, interference, extension, acceleration or hindrance and associated costs, however caused, resulting from delays caused by others performing other work at the site.

7.4 Contract Time Coordination

7.4.1. CONTRACTOR shall give prompt written notice to CITY, ENGINEER and any other affected contractor(s) whenever CONTRACTOR anticipates a conflict in Contract Time(s) related to or simultaneous with associated contract time (s) in the work of others. Within seven (7) days thereafter, CONTRACTOR shall be required to deliver to ENGINEER proposed actions to either (a) prevent an adverse effect on the Progress Schedule of the other contractors arising from delays to the Work, or (b) prevent or overcome an adverse effect on the Progress Schedule for the Work arising from delays from another contract.

7.4.2. When Work is performed out of sequence and ahead of interfacing work, CONTRACTOR shall be responsible for taking reasonable steps to minimize damage or loss to the Work which may be caused by others during the performance of their work, including (but not limited to) furnishing written notice to ENGINEER and to the other contractors that Work has been performed out of sequence and ahead of interfacing work.

7.4.3. When work by others is performed out of sequence and ahead of interfacing Work, the said work shall be considered as if it had been shown on the Contract Documents. CONTRACTOR shall be responsible for protecting said work and shall replace, repair or otherwise settle with others any and all damage caused as a result of the performance of work out of sequence unless CONTRACTOR had no actual knowledge thereof or could not reasonably have known thereof.

ARTICLE 8 - CITY'S RESPONSIBILITIES

8.1 General

8.1.1. CITY shall generally issue all communications to CONTRACTOR through the Construction Manager.

8.1.2. In case of termination of the employment of ENGINEER, CITY shall appoint an engineer whose status under the Contract Documents shall be that of the former ENGINEER.

8.1.3. CITY shall furnish the data required of CITY under the Contract Documents promptly and shall make payments to CONTRACTOR promptly after they are due as provided in Article 14.

8.1.4. CITY's duties in respect of providing lands and easements and engineering surveys to establish reference points, and identifying and making available to CONTRACTOR copies of reports of explorations and tests of subsurface conditions at the site and in existing structures which have

been utilized by DESIGN ENGINEER in preparing the Drawings and Specifications are set forth in Article 4.

8.1.5. CITY will issue unilaterally or negotiate, at its discretion, Change Orders and Change Requests as provided in Article 10.

8.1.6. CITY's responsibility in respect of certain inspections, tests and approvals is set forth in Article 13.

8.1.7. CITY may allow its consultants, agents, attorneys, employees, and others access to the site. CONTRACTOR shall cooperate with CITY in allowing such access.

ARTICLE 9 - ENGINEER'S AND DESIGN ENGINEER'S STATUS DURING CONSTRUCTION

9.1 CITY'S Representative

ENGINEER will be CITY's representative during the construction of the Work. The duties and responsibilities and the limitations of authority of ENGINEER as CITY's representative during construction are set forth in the Contract Documents and shall not be extended without written consent of CITY and ENGINEER.

9.2 Visits to Site

9.2.1. DESIGN ENGINEER may make visits to the site at intervals appropriate to the various stages of construction to observe the progress and quality of the executed Work and to determine, in general, if the Work is proceeding in accordance with the Contract Documents.

9.2.2. ENGINEER will make visits to the site at intervals appropriate to the various stages of construction to observe the progress and quality of the executed Work and to determine, in general, if the Work is proceeding in accordance with the Contract Documents.

9.3 Project Representation

CITY may furnish a Construction Manager and/or Field Representative(s) to represent the CITY and observe the performance of the Work.

9.4 Duties, Responsibilities and Limitations of Authority of Construction Manager:

9.4.1. Construction Manager or Field Representative will act as directed by the CITY and will confer with ENGINEER regarding his activities. Construction Manager, if assigned, will perform the duties and responsibilities described herein with the assistance of Field Representative(s). ENGINEER shall generally issue all communications to CONTRACTOR through Construction Manager, including but not limited to communications directed to CONTRACTOR, from CITY through ENGINEER. CONTRACTOR shall generally issue all communications to CITY, DESIGN ENGINEER and ENGINEER through Construction Manager or Field Representative.

9.4.2. Construction Manager will: provide instructions to Field Representative(s) on procedures to be followed and schedule inspections of the Work; review daily inspection reports prepared by Field Representative(s); prepare draft Field Orders, Change Requests or Change Orders as required and review them with Field Representative(s),Design Engineer, ENGINEER or CITY, as applicable.

9.4.3. Construction Manager or Field Representative will attend meetings with CONTRACTOR, such as the Preconstruction Conference, Project Meetings and any other Project related meetings and review and circulate copies of minutes thereof.

9.4.4. Construction Manager will serve as DESIGN ENGINEER's liaison with CONTRACTOR, working principally through CONTRACTOR's superintendent, to assist in understanding the intent of the Contract Documents, and will serve as CITY's liaison with CONTRACTOR when CONTRACTOR's operations affect CITY's on-site operations, and when additional information is required from CITY for proper execution of the Work.

9.4.5. Construction Manager will advise CONTRACTOR, through or with the assistance of Field Representative(s), of the commencement of any Work requiring a Shop Drawing or sample, when it is observed that a submittal has not been reviewed by DESIGN ENGINEER.

9.4.6. Construction Manager will conduct on-site observations of the Work in progress and receive Field Representative(s)'s observation comments and non-conformance reports, to determine if the Work is proceeding in accordance with the Contract Documents.

9.4.7. Construction Manager will notify CONTRACTOR of disapproval or rejection of Work whenever Construction Manager or ENGINEER believe that any Work is defective, and will notify CONTRACTOR whether defective Work is to be corrected, or replaced.

9.4.8. Construction Manager will notify CONTRACTOR of any Work that is to be uncovered for observation, testing inspection or approval.

9.4.9. Construction Manager will accompany, through or with the assistance of Field Representative(s), visiting inspectors representing governmental or other agencies having jurisdiction over the Project, and record the results of the inspections and report to ENGINEER.

9.4.10 Construction Manager will transmit to CONTRACTOR clarifications and interpretations as issued by ENGINEER.

9.4.11 Construction Manager will consider and evaluate CONTRACTOR's proposed variations and the changes in the Work or the Contract Documents and report such proposals and evaluations to ENGINEER. Construction Manager will communicate decisions on such proposals to CONTRACTOR as issued by ENGINEER or CITY.

9.4.12 Construction Manager will report promptly to ENGINEER and CITY upon gaining knowledge of the occurrence of any accident at the site.

9.4.13 Construction Manager will prepare reports of the progress of the Work and of CONTRACTOR's compliance with the Progress Schedule.

9.4.14 Construction Manager will consult as appropriate with ENGINEER in advance of scheduled major tests, inspections or the commencement of important phases of the Work.

9.4.15 Construction Manager will review and evaluate CONTRACTOR's Application for Payment and advise ENGINEER accordingly.

9.4.16 Construction Manager will review and evaluate CONTRACTOR's notice that CONTRACTOR considers the Work (or part thereof) substantially complete and advise ENGINEER accordingly.

9.4.17 Construction Manager will observe whether all items on lists of items to be completed prior to Final Payment have been completed and make recommendations to ENGINEER concerning Acceptance.

9.4.18 During the course of the Work, the Construction Manager will verify that certificates, maintenance and operation manuals and other data required to be assembled and furnished by CONTRACTOR are applicable to the items actually installed and deliver this material to ENGINEER.

9.4.19 Construction Manager will not: (1) authorize any variation or change in the Work or in the Contract Documents or approve any equivalent material or equipment; (2) exceed the limitations of Construction Manager's authority as set forth in this document; (3) undertake any of the responsibilities of CONTRACTOR, Subcontractors or CONTRACTOR's superintendent, or expedite the Work; (4) inspect, advise on or issue directions relative to any aspect of the means, methods, techniques, sequences or procedures of construction unless such is specifically called for in the Contract Documents; (5) inspect, advise on or issue directions as to safety precautions and programs in connection with the Work; (6) certify Substantial Completion of the Work; or (7) participate in specialized field or laboratory tests.

9.5 Duties, Responsibilities and Limitations of Authority of Field Representative(s)

9.5.1. As requested by Construction Manager, Field Representative(s) will assist in obtaining from CITY additional details or information, when required at the job site for proper execution of the Work.

9.5.2. Field Representative(s) will advise Construction Manager and CONTRACTOR of the commencement of any Work requiring a Shop Drawing or sample submission if he observes that a submittal(s) has not been reviewed by DESIGN ENGINEER.

9.5.3. Field Representative(s) will conduct on-site observations of the Work in progress to assist Construction Manager in determining if the Work is proceeding in accordance with the Contract Documents and that completed Work will substantially conform to the Contract Documents.

9.5.4. Field Representative(s) will notify CONTRACTOR and report to Construction Manager for review and possible disapproval or rejection by ENGINEER or Construction Manager whenever he believes that any Work is defective.

9.5.5. Field Representative(s) will notify CONTRACTOR and report to Construction Manager for determination of necessary action by ENGINEER or Construction Manager when he believes Work should be uncovered for observation, testing, inspection or approval.

9.5.6. Field Representative(s) will verify that tests, equipment and systems start-ups and operating and maintenance instructions are conducted as required by the Contract Documents and in the presence of the required personnel and that CONTRACTOR maintains adequate records thereof; observe, record and report to Construction Manager appropriate details relative to the test procedures and start-ups.

9.5.7. Field Representative(s) will report to Construction Manager when clarifications and interpretations of the Contract Documents are needed or requested.

9.5.8. Field Representative(s) will keep a diary recording hours on the job site, weather conditions, data relative to questions of extras or deductions, lists of visiting officials and representatives of Suppliers, daily activities, decisions, observations in general and specific observations in more detail as in the case of observing test procedures. Field Representative(s) will summarize such information on the daily inspection report and submit copies to Construction Manager.

9.5.9. Field Representative(s) will assist Construction Manager with record keeping as directed by Construction Manager.

9.5.10 Field Representative(s) will report immediately to CITY, ENGINEER and Construction Manager upon gaining knowledge of the occurrence of any accident.

9.5.11 Field Representative(s) will assist Construction Manager with the review and evaluation of CONTRACTOR's Application for Payment, noting particularly their relation to the schedule of values, Work completed, and materials and equipment delivered at the site but not incorporated in the Work.

9.5.12 Field Representative(s) will prepare draft lists of items to be completed or corrected (punch lists) as directed by Construction Manager.

9.5.13 Field Representative(s) will not: (1) authorize any variation or change in the Work or in the Contract Documents or approve any equivalent material or equipment; (2) exceed the limitations of Field Representative(s)'s authority as set forth in this document; (3) undertake any of the responsibilities of CONTRACTOR, Subcontractors or CONTRACTOR's superintendent, or expedite the Work; (4) inspect, advise on or issue directions relative to any aspect of the means, methods, techniques, sequences or procedures of construction unless such is specifically called for in the Contract Documents; (5) inspect, advise on or issue directions as to safety precautions and programs in connection with the Work; (6) certify Substantial Completion of the Work; or (7) participate in specialized field or laboratory tests.

9.6 Clarifications and Interpretations

ENGINEER will issue with reasonable promptness such written clarifications or interpretations of the requirements of the Contract Documents (in the form of Drawings or otherwise) as ENGINEER may determine necessary, which shall be consistent with or reasonably inferable from the overall intent of the Contract Documents.

9.7 Authorized Variations in Work

ENGINEER may authorize minor variations in the Work from the requirements of the Contract Documents which do not involve an adjustment in the Contract Price or the Contract Time and are consistent with the overall intent of the Contract Documents and required to produce the intended result. These may be accomplished by a Field Order and will be binding on CONTRACTOR who shall perform the Work involved promptly.

9.8 Rejecting Defective Work

ENGINEER will have authority to disapprove or reject Work at any time during the construction of the Work, which ENGINEER believes to be defective. ENGINEER will also have authority to require special inspection or testing of the Work, whether or not the Work is fabricated, installed, or completed. When

CONTRACTOR has been notified by ENGINEER of disapproval or rejection of defective Work, CONTRACTOR shall take immediate action to correct or replace same.

9.9 Determinations of Quantities and Classifications of Unit Price Work

Field Representative or Construction Manager will determine the actual quantities of each classification of Unit Price Work. Field Representative or Construction Manager will review with CONTRACTOR, Field Representative or Construction Manager's preliminary determinations on such matters before rendering a written decision thereon (by recommendation of an Application for Payment or otherwise). Field Representative or Construction Manager's written decisions thereon will be final and binding upon CONTRACTOR, unless, with seven (7) days after the date of any such decision, CONTRACTOR delivers to CITY written notice of a claim.

9.10 Decisions on Disputes

DESIGN ENGINEER will be the initial interpreter of the requirements of the Contract Documents, and in such capacity will render initial determinations in respect of the acceptability of the Work thereunder. Unless otherwise provided in the Contract Documents, notices, proposals or other matter relating to the acceptability of the Work or the interpretation of the requirements of the Contract Documents pertaining to the performance and furnishing of the Work will be referred initially to DESIGN ENGINEER in writing with a request for a formal decision in accordance with this paragraph, which DESIGN ENGINEER will render within a reasonable time. DESIGN ENGINEER's written determination thereon shall be final and binding on CONTRACTOR unless CONTRACTOR delivers to CITY written notice of a claim within seven (7) days of receipt of such decision.

9.11 Limitations on ENGINEER's and DESIGN ENGINEER's Responsibilities

9.11.1 Neither ENGINEER's or DESIGN ENGINEER's authority to act under this Article or elsewhere in the Contract Documents nor any decision or determination made by ENGINEER or DESIGN ENGINEER in good faith to exercise or not to exercise such authority shall give rise to any duty or responsibility of ENGINEER or DESIGN ENGINEER to CONTRACTOR, any Subcontractor, any Supplier, or any other person or organization performing any of the Work, or to any surety for any of them.

9.11.2 Whenever in the Contract Documents the terms "as ordered", "as directed", "as required", "as allowed", "as approved" or terms of like effect or import are used, or the adjectives "reasonable", "suitable", "acceptable", "proper" or "satisfactory" or adjectives of like effect or import are used to describe requirement, direction, review or judgment of ENGINEER or DESIGN ENGINEER as to the Work, it is intended that such requirement, direction, review or judgment will be solely to evaluate the Work for compliance with the Contract Documents (unless there is a specific statement indicating otherwise).

The use of any such term or adjective shall not be effective to assign to ENGINEER or DESIGN ENGINEER any duty or authority to supervise or direct the furnishing or performance of the Work or any duty or authority to undertake responsibility contrary to the provisions of this Article.

9.11.3 ENGINEER and DESIGN ENGINEER will not be responsible for CONTRACTOR's means, methods, techniques, sequences or procedures of construction, or the safety precautions and programs incident thereto, and ENGINEER and DESIGN ENGINEER will not be responsible for CONTRACTOR's failure to perform or furnish the Work in accordance with the Contract Documents.

9.11.4 ENGINEER and DESIGN ENGINEER will not be responsible for the acts or omissions of CONTRACTOR or of any Subcontractor, any Supplier, or of any other person or organization performing or furnishing any of the Work.

ARTICLE 10 - CHANGES IN THE WORK

10.1 Changes in the Work

10.1.1 Without invalidating the Agreement and without notice to any surety, CITY may, at any time, by duly executed Change Order or Change Request, order changes within the scope of the Agreement consisting of additions, deletions or other revisions in the Work. Upon receipt of that order, CONTRACTOR shall promptly proceed or continue with the Work involved (based on the conditions stated and other applicable conditions in the Contract Documents). If a change under this Article causes an increase or decrease in the Contract Price or any extension or shortening of the Contract Time, CITY will make an adjustment as provided in Article 11.

10.1.2 CITY or ENGINEER may present to CONTRACTOR an unsigned proposed Change Request requesting that CONTRACTOR submit a proposal for an adjustment in Contract Price or Contract Time for a proposed change in the Work. CONTRACTOR shall submit a proposed adjustment with all supporting data in accordance with Article 11 and the directions given in the Change Request within 14 days of receipt. Said proposed adjustment shall include an itemized estimate of all costs and time for the performance that will result directly or indirectly from the changes described. Estimates shall be prepared in accordance with the requirements of Article 11 and in sufficient detail and with documentation such that ENGINEER can (1) analyze all material, labor, equipment, subcontract, overhead costs and fees, and any other costs covering all aspects of the Work involved in the change, whether such was added, deleted, changed, or impacted; (2) determine that the proposal reflects all impacts on the Contract of the proposed change; and (3) establish that all Contract provisions have been complied with. Any amount proposed for Subcontractors or Suppliers shall be similarly supported.

10.1.3 CITY or ENGINEER may give instructions which may result in changes in the Work not involving an adjustment in the Contract Price or the Contract Time when such changes are necessary or expedient to the satisfactory performance and completion of the Work. These instructions shall be binding on CONTRACTOR.

Any instruction, direction, interpretation, or determination from CITY, ENGINEER or any other source which causes a change shall be treated as a change under this Article provided that CONTRACTOR gives ENGINEER written notice stating the date, circumstances, specific order, and that CONTRACTOR regards the instruction as a change.

Such written notification shall be given to ENGINEER within 7 days after receipt and before CONTRACTOR acts on said instruction, direction, interpretation, or determination. No claim, change or notice by CONTRACTOR will be allowed if asserted after work has commenced on, or if notice is not provided within the stated time limit provided after receipt of, the instruction, direction, interpretation, or determination from CITY, ENGINEER, or any other source.

10.1.4 In making changes under this Article, CITY may give consideration to a notice, proposal or claim from CONTRACTOR, provided the notice, proposal or claim is presented in accordance with the requirements of this Article and Article 11. CONTRACTOR shall provide CITY or ENGINEER any

additional or supplemental information requested for purposes of evaluation of CONTRACTOR's submittal, but such requests by the CITY or ENGINEER will not constitute acceptance of the notice, proposal or claim.

10.1.5 ENGINEER will evaluate a change notice, proposal or claim from CONTRACTOR, and CITY will review with CONTRACTOR the results of the evaluation before rendering a determination. If CITY, with the advice of ENGINEER, concurs that a change in the Work has occurred or been ordered, CONTRACTOR will be directed to submit a proposal for an adjustment in accordance with paragraph 10.1.2. If CITY concludes that a change has not occurred or been ordered, CITY's determination shall be final and binding on CONTRACTOR unless CONTRACTOR delivers to CITY written notice of a claim within 7 days from receipt of such decision.

10.1.6 If notice of any change affecting the general scope of the Work or change in the Contract Price is required by the provisions of any Bond to be given to the Surety, it shall be CONTRACTOR's responsibility to so notify the Surety, and the amount of each applicable Bond shall be adjusted accordingly. CONTRACTOR shall furnish proof of such adjustment to CITY if requested.

10.2 Change Orders and Change Requests

10.2.1 Contract Price or Contract Time shall be changed only by Change Order. The basis for a subsequent change in Contract Price or Contract Time may also be authorized by Change Request duly executed by the CITY.

10.2.2 A Change Order duly executed by CITY and CONTRACTOR provides for an all inclusive settlement for all changes and direct, supplemental, indirect, consequential and cumulative costs and delays, and CONTRACTOR's signature represents a waiver of any and all rights to file a claim on account of that instrument.

10.2.3 CITY and CONTRACTOR shall execute Change Orders covering changes in the Work (including any necessary adjustments in Contract Price or Contract Time) which are ordered or agreed to by the parties, changes in Contract Price or Contract Time which are agreed to in total or in part, or previously executed Change Requests with reasonable promptness. Adjustments to Contract Price resulting from changed work shall only be included in Applications for Payment after a Change Order has been duly executed.

10.2.4 When duly executed by CITY, CITY may use Change Requests to order changes in the Work, provide the basis for a subsequent adjustment in Contract Price or Contract Time, or authorize deviations in the Work. Amounts for work directed by a Change Request shall not be included in Applications for Payment until that Change Request has been incorporated into a Change Order.

10.2.5 A Change Order, or Change Request, duly executed by CITY, but not executed by CONTRACTOR, or executed by CONTRACTOR with a notice of reservation of rights to claim additional adjustments, shall become final and binding on CONTRACTOR, without consideration of the reservation of rights, unless CONTRACTOR delivers to CITY written notice of a claim within 7 days after receipt of that instrument.

10.2.6 An unsigned Change Request may be used by CITY and CONTRACTOR to negotiate changes in the Work, or in Contract Price or Contract Time. A Change Request will be the instrument used by CITY to direct Work on a cost of the Work basis as described in Article 11.

A Change Order will be issued to incorporate the instruction to proceed with a change on a cost of the Work basis into the Contract Documents after the actual cost of the work has been determined.

10.3 Waivers

10.3.1 No proposal or claim by CONTRACTOR for an adjustment under this Article shall be allowed for any costs or delay incurred more than 7 days before CONTRACTOR gives written notice as required.

10.3.2 No proposal or claim by CONTRACTOR for an adjustment under this Article shall be allowed if made after the date of Final Payment.

10.3.3 Additional Work performed without authorization of a Change Order or properly executed Change Request will not entitle CONTRACTOR to an increase in Contract Price or an extension of Contract Time, except in the case of an emergency as provided in Article 6.

10.3.4 CONTRACTOR acknowledges that there may be changes during the course of the Work and acknowledges that the probable effect of changes has been accounted for in the development of the Contract Price and Progress Schedule. Whenever CONTRACTOR makes a proposal or claim under Article 11 such proposal or claim shall include the total amount of adjustment in Contract Price and Contract Time to which the CONTRACTOR believes it is entitled. Except as CITY and CONTRACTOR may otherwise agree in writing, CONTRACTOR shall be deemed to have waived (1) any adjustment to which it might otherwise be entitled under Article 11 where such proposal or claim fails to request such adjustments, (2) any increase in the amount of adjustment additional to that requested in the proposal or claim, and (3) any claim for reimbursement of impact allegedly resulting from the cumulative effect of the number, nature, or extent of any changes.

ARTICLE 11-CHANGES IN CONTRACT PRICE OR CONTRACT TIME

11.1 Changes in Contract Price or Contract Time

The Contract Price constitutes the total compensation (subject to authorized adjustments) payable to CONTRACTOR for all duties, responsibilities, and obligations required to perform the Work. All duties, responsibilities, and obligations assigned or undertaken by CONTRACTOR shall be at its expense without change in the Contract Price or Contract Time except as set out below.

11.2 Proposals or Claims Substantiating Adjustments

11.2.1 Supporting data for any proposal or claim by the CONTRACTOR shall include at a minimum a complete and detailed breakdown of the proposed price and a detailed explanation of any time impact for the change. Said proposed price shall be based on the lowest reasonable cost consistent with sound construction practice. Such breakdown shall include itemizations by trade of all labor with man hours and hourly rates, equipment with hours of use and rates, and material by item with costs, all in sufficient detail to evaluate the cost of the individual components of the Work, including copies of purchase orders, invoices and subcontract change orders.

11.2.2 CONTRACTOR proposals or claims shall state in writing, and provide evidence that the amounts included cover all direct, supplemental, indirect, consequential, and cumulative costs and delays, as applicable, and that those costs and delays would be or were necessarily incurred, despite CONTRACTOR's reasonable, prudent and diligent efforts to mitigate them.

11.2.3 CONTRACTOR proposals and claim supporting data shall become due within 14 days of receipt of the unsigned Change Request or receipt by CITY of written notice of claim (unless ENGINEER allows an additional period), and shall remain firm for a period of not less than 60 days from receipt by ENGINEER of the proposal or supporting data. Any delay in the submittal of a proposal or claim will not justify or constitute basis for an increase in Contract Price or Contract Time. Proposals or claims shall be submitted on forms acceptable to CITY.

11.2.4 Failure of CONTRACTOR to comply with the time requirements for written notice or for submittal of supporting data shall be considered a waiver by CONTRACTOR of any claim for an addition to the Contract Price or an adjustment to the Contract Time and CONTRACTOR agrees that no additional compensation or time adjustments are due if the provisions of Article 10 and this Article are not complied with.

11.2.5 Where the change in Contract Price arises from changes in the schedule of all or part of the Work, or where a change in Contract Time is sought, the proposal shall be based on a detailed analysis of the Progress Schedule, and shall cover all applicable elements affecting the Work involved, including, but not limited to, labor crews, craft levels, equipment utilization, work during other than normal working hours, productivity and production rates, shop drawing preparation, submittal and review, material and equipment delivery, and testing and start-up times.

11.2.6 Proposals or claims shall cover all aspects of the Work involved, whether relating to deleted, added, revised, or impacted items of Work. Amounts for Subcontractors or Suppliers at any tier shall be equally supported.

11.2.7 No proposal or claim for an adjustment in Contract Price or Contract Time shall be valid unless submitted in accordance with Article 10 and this Article.

11.3 Methods for Determining Adjustments in Contract Price

11.3.1 The methods to be used to determine an adjustment in Contract Price necessitated by changes ordered or negotiated pursuant to these General Conditions, or Work covered by a proposal or a claim, collectively to be referred to as the "Work involved," are limited to the following:

11.3.2 Contract Unit Prices: Where the Work involved is covered or is of the same character as Unit Price Work, by application of those unit prices to the quantities of the items involved (subject to the provisions covering Unit Price Work). No additional allowances or charges shall be added to these unit prices.

11.3.3 Negotiated Unit Prices: Where the Work involved is not covered by unit prices contained in the Contract Documents, unit prices may be negotiated on the basis of costs calculated in accordance with this Article.

11.3.4 Negotiated Lump Sum: By mutual acceptance of a lump sum price negotiated on the basis of CONTRACTOR's itemized estimate of the anticipated Cost of the Work involved, determined as specified in this Article.

11.3.5 Cost of the Work: Where CITY and CONTRACTOR cannot agree on any of the methods described in paragraphs 11.3.2, 11.3.3, or 11.3.4, CITY may direct CONTRACTOR to proceed with the Work involved on the basis of actual costs in accordance with this Article. When the cost of the Work

basis is directed by CITY, CITY shall prescribe the required procedures for accounting of the allowed costs. These procedures shall include daily accounting of the material and equipment used and labor employed. Failure to submit this information for acknowledgment by the ENGINEER within one day after any part of the Work is performed shall result in any discrepancy between ENGINEER's records and CONTRACTOR's records being resolved in favor of the ENGINEER's records.

11.3.6 Estimated Adjustment: Where CITY and CONTRACTOR cannot agree on any of the methods described in paragraphs 11.3.2, 11.3.3, or 11.3.4, and the CITY does not wish to proceed on a Cost of the Work basis as described in paragraph 11.3.5, CITY with the advice of ENGINEER shall determine a reasonable adjustment of the Contract Price for the Work involved on the basis as described in Article 10 and this Article. The adjustment in Contract Price and Contract Time will be issued by Change Request, incorporated into the Contract Documents by Change Order and CONTRACTOR shall be paid on that basis. CITY's determination shall be final and binding unless CONTRACTOR delivers to CITY written notice of a claim within seven (7) days of receipt of such determination.

11.3.7 Where the Work involved is not covered by any of the preceding methods, and when payment is to be determined by a court of competent jurisdiction, it is agreed that the cost of the WORK method shall be the appropriate method for determining the cost of the Work involved. Payroll, equipment, material and other costs will only be allowable when determined from daily time sheets which expressly correlate to the Work involved, were prepared while work was in progress, clearly list actual units and usage, and were submitted to ENGINEER as the work was performed.

11.3.8 Anticipated or actual costs computed for the Work involved means the sum of all incremental costs which would be, or actually were, necessarily incurred by CONTRACTOR in the proper performance of the Work. Those costs shall be in amounts no higher than those prevailing in the locality of the Project or as allowed elsewhere in these Contract Documents, and shall include only the appropriate items for labor, material, equipment, and supplemental costs specified below.

11.4 Determining Cost Adjustments to Changes in Contract Price

11.4.1 CONTRACTOR shall provide to ENGINEER, if requested, proof of any burdens, including insurance costs, added to base wages to determine payroll costs described in this Article.

11.4.2 Changes in the Contract Price made on the basis of the methods described in paragraph 11.3 shall be based upon the following:

11.4.2.1 Payroll costs for craft labor in the direct employ of CONTRACTOR assigned to the site and engaged in furnishing and incorporating materials or equipment in the Work involved. Payroll costs shall include wages plus the necessary labor burdens, which may include social security, unemployment, workers compensation, health and retirement benefits, vacation and Holiday pay, and other payments pursuant to union agreements but shall exclude profit sharing, bonuses, and similar remunerations. Labor charges shall be allowed only for hourly labor directly involved in the Work. Such personnel may include working foreman at the site. The cost of all salaried employees shall be considered as a part of allowances allowed in this Article. Labor rates shall be as actually paid based on certified payroll records or in accordance with general rates for various pay categories established by union agreements or by mutual agreement between CITY and CONTRACTOR prior to the commencement of the Work. The expenses of performing Work outside of normal working

hours, on weekends or Holidays, shall be included in the above to the extent authorized by CITY as set out in the Contract Documents.

11.4.2.2 Payments by CONTRACTOR to Suppliers for all material and equipment in the Work involved, including transportation and storage costs, and necessary Suppliers field services. All cash deposits shall accrue to CITY, if CITY advances funds to CONTRACTOR with which to make payments. All trade discounts, rebates and refunds and all returns from sale of surplus items shall accrue to CITY and CONTRACTOR shall make provisions so that they may be obtained. When required by CITY, CONTRACTOR shall obtain competitive bids from Suppliers in order to achieve a reasonable price. When determining material and equipment costs, actual invoices segregating items associated with Work involved shall be the record upon which actual costs shall be based.

11.4.2.3 Payments by CONTRACTOR to Subcontractors for Work involved performed by Subcontractors. When required by CITY, CONTRACTOR shall obtain competitive detailed bids from Subcontractors in order to achieve a reasonable price. When determining Subcontractor costs at any tier, the Subcontractor's Cost shall be determined in the same manner as CONTRACTOR's costs. All Subcontracts shall be subject to the provisions of this Article insofar as applicable.

11.4.2.4 Costs of field supplies consumed in the performance of the Work involved, and purchase costs of small tools used or consumed in the performance of the Work involved (and purchase cost less market value if used but not consumed) which are individually valued at less than $1,000.00. Consumables shall include such items as rags, nails, fasteners, weld rod, gases, lubricants, paper, grout, stakes, power and fuel for tools and equipment, chains, cables, hoses, water, and similar items normally used in the course of the Work. Costs of field supplies will be paid as a percentage of direct labor cost in an amount that shall not exceed the allowance shown in this Article.

11.4.2.5 Equipment costs required solely in connection with the Work involved reflecting rented or leased or owned equipment cost for individual construction equipment or machinery whose replacement value is in excess of $1,000.00. Transportation, loading and unloading, installation, dismantling and removal costs shall be included only if such equipment is or was transported to the site solely to perform the Work involved. All equipment costs shall cease when the equipment is no longer necessary to perform the Work involved. Payroll costs for craft labor operating the equipment shall be as in paragraph 11.4. Equipment costs shall be computed using the same accounting and estimating rules regardless of whether related to added or deleted items of Work.

11.4.2.5.1 Rented or owned equipment at the site, and not in actual use, shall be paid at the rates for rented equipment, or on the basis of fifty percent (50%) of the rates for owned equipment, respectively, as specified below. In no event shall the idle time claimed in a day exceed the established normal working hours. Payments for idle equipment shall come due only as long as the equipment was idled solely by actions of CITY, and provided that the idle period exceeds that normally experienced for such equipment.

11.4.2.5.2 Except as provided below, for equipment rented or leased, CONTRACTOR shall be entitled to amounts based on negotiated rental or lease rates, but in no event shall the amounts allowed exceed an hourly rate based on the monthly rates, listed in the most current and most appropriate Rental Rate Blue Book (Blue Book) published by Dataquest, Inc. for the area where the Project is located (presently 3 volumes, relating to equipment of various ages) divided by 176 hours per month. Rates for equipment not included in the Blue Book shall be interpolated or extrapolated from the information contained therein. In addition to the rental or leasing rate, operating costs shall not exceed the estimated hourly operation rate in the Blue Book. For multiple shift Work, the allowable equipment rate for second or third shifts shall not exceed fifty percent (50%) of the adjusted base rate.

11.4.2.5.3 For equipment rented or leased from lessor firms associated with or owned by CONTRACTOR, CONTRACTOR shall be entitled to reimbursement as though the equipment was owned equipment, as specified below.

11.4.2.5.4 For equipment owned by CONTRACTOR, CONTRACTOR shall be entitled to costs based on billings established by his normal accounting practices, but in no event shall those costs exceed the maximum allowable costs for rented or leased equipment.

11.4.2.6 Costs of special consultants who are not employees in the direct employ of CONTRACTOR or any of the Subcontractors or Suppliers, or special Subcontractors; provided that those costs are or were authorized by CITY prior to proceeding with the Work involved, and only if their activities are not covered by costs included under paragraph 11.4, or are not excluded by paragraph 11.9.

11.4.2.7 Sales, consumer, or similar taxes related to the Work involved, and for which CONTRACTOR is liable, royalty payments, and fees for permits and licenses, any of them related solely to the Work involved.

11.4.2.8 Deposits to be lost for causes other than negligence of CONTRACTOR, any Subcontractor or anyone directly or indirectly to be employed by any of them or for whose acts any of them may be liable, related solely to the Work involved.

11.4.2.9 Increased costs of premiums for Bonds and Insurance resulting solely because of the Work involved.

11.5 Costs Covered by CONTRACTOR's Allowances

11.5.1 Except as otherwise specifically provided in paragraph 11.9, the cost of the Work involved shall not include any of the following costs, all of which are considered to be covered by CONTRACTOR's Allowances:

11.5.2 Payroll costs and other compensation of personnel employed by CONTRACTOR whether at the site or in CONTRACTOR's principal or a branch office for management or administration of the Work, including, but not limited to, (a) CONTRACTOR's officers, executives, principals, general managers, project managers, construction managers, estimators, schedulers, detailers, claims consultants, attorneys, auditors, accountants, purchasing and contracting agents, expediters, and (b) resident

superintendents, nonworking foremen, field engineers and architects, safety personnel, timekeepers, and clerks.

11.5.3 Expenses of CONTRACTOR's principal, branch and site offices except as authorized in writing by CITY prior to proceeding with the Work involved.

11.5.4 Any part of CONTRACTOR's capital expenses, including interest on CONTRACTOR's capital employed for the Work involved and charges for delinquent payments.

11.5.5 Costs due to the fault or negligence of CONTRACTOR, any Subcontractor, or anyone directly or indirectly employed by any of them or for whose acts any of them may be liable, including but not limited to deposits to be lost, costs to correct defective Work, disposal of materials or equipment wrongly supplied and making good any damage to property.

11.5.6 Market value of small tools used but not consumed which remain in the property of CONTRACTOR.

11.5.7 Costs associated with the preparation of Change Orders or Change Requests (whether or not ultimately authorized by CITY), or the preparation or filing of claims.

11.5.8 Expenses of CONTRACTOR associated with anticipated lost profits or lost revenues, lost income or earnings, lost interest on earnings or unpaid retainage.

11.5.9 Costs derived from the computation of a "home office overhead" rate by application of the Eichleay, Allegheny, Burden Fluctuation, or other similar methods.

11.5.10 Costs of special consultants or attorneys, whether or not in the direct employ of CONTRACTOR, employed for services specifically related to the resolution of a claim, dispute, or other matter relating to the acceptability of the Work.

11.5.11 Over administrative expense or contingent costs of any kind, and the costs of any item not specifically and expressly included in Article 11.

11.6 CONTRACTOR Allowances for Changes to the Work

CONTRACTOR's allowances, which includes costs not directly chargeable under this Article, expenses itemized in paragraph 11.5, and profit shall not exceed the following percentages of the various portions of the Work involved. No other allowances in addition to these will be allowed.

Cost Element	Allowance for Additions	Allowances for Deductions
CONTRACTOR and Subcontractor labor per 11.4.2.1. exclusive of the premium portion of craft labor	15%	(15)%
CONTRACTOR and Subcontractor equipment and materials per 11.4.2.2.	15%	(15)%
Subcontractor costs resulting		

from direct Sub-agreement with CONTRACTOR per 11.4.2.3.	5%	(5)%
Allowance for small tools and consumables per 11.4.2.4. (percentage of direct labor)	2%	(2)%
CONTRACTOR and Subcontractor owned or rented equipment per 11.4.2.5.	15%	(15)%
CONTRACTOR and Subcontractor supplemental costs per 11.4.2.9. premium portion of craft labor costs; and other authorized costs.	0%	(0)%

11.7 Unit Price Work

11.7.1 Where the Contract Documents provide for Unit Price Work, the Contract Price stated in the Agreement will include for all Unit Price Work an amount equal to the sum of the unit prices for each item of Unit Price Work times the estimated quantity of each item as indicated in the Agreement.

Each unit price will be deemed to include an amount considered by CONTRACTOR to be adequate to cover all costs, including supplemental and administrative costs, and profit. The estimated quantities of Unit Price Work indicated in the Agreement are given solely for the purpose of comparison of bids and determining the Contract Price for the Work as awarded.

11.7.2 CONTRACTOR shall promptly, after becoming aware of, and before proceeding with any significant quantities of affected Work, notify CITY in writing of any additional or reduced quantities for an item of Unit Price Work which will require a twenty percent (20%) or higher adjustment in the as-awarded quantity for that item or an increase in Contract Price greater than 5%.

11.7.3 CITY reserves the right to notify CONTRACTOR in writing of any variation in quantities meeting the criteria established in this paragraph.

11.7.4 Prior to Final Payment, or before the total amount paid exceeds the established Contract Price, an appropriate Change Order will be issued on the recommendation of ENGINEER, to adjust the estimated quantities for Unit Price Work and to correspondingly adjust the Contract Price.

11.7.5 If CITY determines that the additional or reduced quantities for an item of Unit Price Work justify an adjustment in the unit price, CITY shall authorize such an adjustment. No adjustment shall be provided under this paragraph unless the variation between actual and estimated quantities for all Unit Price Work result in an increase or decrease in Contract Price by more than ten percent (10%). If CITY determines that the unit prices established in the Agreement are valid even for the additional or lower quantities, that decision shall be final and binding on CONTRACTOR unless CONTRACTOR delivers to CITY written notice of a claim within 7 days from receipt of such decision.

11.7.6 In re-evaluating unit prices contained in the Contract Documents, CONTRACTOR and CITY shall take into account increases or decreases in CONTRACTOR's supplemental and administrative costs

for the performance of the Work solely as a result of the variation in quantities, as opposed to as a result of CONTRACTOR's fault or negligence, or bid estimate errors.

11.8 Cash Allowances

It is understood that when cash allowances are named in the Contract Documents CONTRACTOR has included in the Contract Price all allowances so named. CONTRACTOR shall cause the Work so covered to be within the limit of the allowances set forth in the Contract Documents. Upon Final Payment, the Contract Price shall be adjusted as required and an appropriate Change Order issued. CONTRACTOR agrees that the original Contract Price includes such sums as the CONTRACTOR deems proper for costs and profit on account of cash allowances. No demand for additional cost or profit in connection therewith will be valid.

11.9 Criteria for Determining Adjustments in Contract Time

11.9.1 The criteria to be used to determine an adjustment in Contract Time necessitated by changes ordered or negotiated pursuant to these General Conditions, or Work covered by a proposal or a claim, are limited to the following:

11.9.2 An extension in Contract Time will not be granted unless CONTRACTOR can demonstrate through an analysis of the Progress Schedule that the increases in the time to perform or complete the Work, or specified part of the Work, beyond the corresponding Contract Time(s) arise from unforeseeable causes beyond the control and without the fault or negligence of both CONTRACTOR and his Subcontractors, Suppliers or other persons or organizations, and that such causes in fact lead to performance or completion of the Work, or specified part in question, beyond the corresponding Contract Time. An adjustment in Contract Time will be based solely upon net increases in the time required for the performance or completion of parts of the Work controlling achievement of the corresponding Contract Time(s) at the time that the incident which causes the change occurs. However, even if the time required for the performance or completion of controlling parts of the Work is extended, an extension in Contract Time will not be granted until performance or completion of the controlling Work necessarily extends beyond the Contract Time in question despite CONTRACTOR's reasonable and diligent actions to guard against those effects.

Examples of unforeseeable causes include: (1) acts of God or of the public enemy; (2) acts of CITY or ENGINEER in its sovereign or contractual capacity; (3) acts of the Government or another Public Entity in its sovereign capacity; (4) acts of another contractor in the performance of a contract with the CITY or COUNTY, if not identified in the Contract; (5) fires, floods, epidemics, quarantine restrictions; (6) sink holes, archaeological finds; (7) strikes, freight embargoes; (8) unfavorable weather defined in 11.11; (9) a case of differing physical conditions; (10) a case of existing Underground Facilities owned by others.

11.9.3 Notwithstanding any provisions in the Contract Documents to the contrary, an extension of Contract Time shall be the sole remedy of CONTRACTOR for any delay of any kind. The only exception, under which an adjustment in Contract Price shall be allowed, shall be if the delay has been caused solely by acts constituting intentional interference by CITY or ENGINEER with CONTRACTOR's performance of the Work and such acts continue after CONTRACTOR's notice to ENGINEER of such interference. Intentional interference is an act or omission by the CITY or ENGINEER by which the CITY or ENGINEER intentionally, willfully, or knowingly delays job progress. The CITY's exercise of any of its rights under Article 10 and this Article regardless of the

extent or number of the changes, or the CITY's exercise of its remedies of stopping the Work or requiring correction or re-execution of any defective work shall not under any circumstances be construed as intentional interference with the CONTRACTOR's performance of the Work. No adjustment in Contract Price under this paragraph shall be provided for any reason if: (1) performance would have been so extended by any one other cause, including fault or negligence of CONTRACTOR, or his Subcontractors, Suppliers, or other persons or organizations or; (2) an adjustment is provided or excluded under any other provision of the Contract Documents or; (3) delays merely prevent CONTRACTOR's achievement of completion of the Work, or part in question, ahead of the corresponding Contract Time(s), including any authorized adjustments.

11.9.4 An adjustment in Contract Price, to complement an extension in Contract Time, on account of delays meeting the requirement for an adjustment in Contract Price under paragraph 11.9.3 shall be determined as follows subject to all applicable requirements of paragraph 11.9. Amounts shall only be allowed to the extent they were increased or decreased on account of such delays, and shall include only the appropriate amounts for CONTRACTOR and Subcontractors: labor, material and equipment costs, construction equipment costs, supplemental costs, and in accordance with paragraph 11.4, payroll costs, and travel and subsistence expenses, for the superintendent and other personnel classifications agreed by CITY, which shall not include any of the personnel listed in paragraph 11.9.2 (a), in the direct employ of CONTRACTOR and Subcontractors at the site; rental/lease costs of site office and temporary facilities, and costs of utilities, telephone service and sanitary facilities expended to maintain such facilities, and an allowance of 15% of the total of these costs for any other costs not directly chargeable (including overhead expense) and profit.

11.10 Waivers

CONTRACTOR's recovery (1) of acceleration costs incurred as an alternative to an extension in Contract Time on account of delays not meeting the requirements for extensions in Contract Time or an adjustment in Contract Price; (2) of escalation costs for any part of the Work; (3) of delay costs, except as otherwise specifically provided in this Article, shall be excluded.

11.11 Unfavorable Weather

The Contractor shall become familiar with and prepare for the normal weather conditions existing in Volusia County, Florida. Normal weather conditions are expected to impact the Work in numerous ways including but not limited to delays during and after periods of rainfall, temporary flooding and ponding, we ground, high winds and debris. The Contractor acknowledges that its Bid Proposal and subsequent schedule anticipates and includes as a minimum the normally anticipated number of unfavorable weather days historically anticipated in Volusia County for the period of time covered by this Agreement. The consequences and impact of such unfavorable weather conditions are neither excusable nor compensable.

The Contractor acknowledges that the following conditions must all exist before unfavorable weather conditions may be found to exist:

(1) Unfavorable weather conditions actually existed at the Project Site for one or more work days in excess of the number of work days historically anticipated.

ARTICLE 12 - SCHEDULES

12.1 Progress and Submittal Schedules

12.1.1 Types of Schedules

12.1.1.1 CONTRACTOR shall prepare and submit to ENGINEER for review, a Progress Schedule in accordance with Section 01310.

12.1.1.2 CONTRACTOR shall prepare and submit to ENGINEER for review, a schedule of Shop Drawing and sample submissions. This schedule shall consist of a list of the submittals to be made over the course of the project; anticipated and actual dates of submittal and return for both initial and resubmissions; and the anticipated dates of submittal approval so as not to delay the Project. The schedule shall allow for review and processing time by DESIGN ENGINEER and ENGINEER.

12.1.1.3 CONTRACTOR shall prepare and submit to ENGINEER for review with the Project Schedule, manpower charts and cash flow projections contemplated or required by the schedule in a form acceptable to ENGINEER. Updated plan and actual expended manpower charts and cash flow projections shall be submitted with each monthly or interim schedule submission when requested by ENGINEER.

12.1.2. Submittal

12.1.2.1 CONTRACTOR shall enter on the Progress Schedules the actual progress on a monthly basis, or at such intervals as requested by ENGINEER, and shall deliver to ENGINEER five (5) copies of the schedule documentation.

12.1.2.2 Progress Schedules are to be submitted with each Application for Payment. An Application for Payment shall not be paid until the schedule submittal and any requested corrections or clarifications have been accepted by ENGINEER for inclusion into the Application for Payment. If additional updated schedules are requested by ENGINEER they are to be provided within seven days of the date of request, but do not constitute permission to submit additional Applications for Payment.

12.1.3. Review

12.1.3.1 ENGINEER shall review schedule submittals. If, in the opinion of ENGINEER, the schedule (1) does not accurately reflect CONTRACTOR's actual progress or work plan or, (2) is unreasonable or cannot be used to effectively evaluate CONTRACTOR's progress or, (3) is not in compliance with this Article and other appropriate sections of the Contract, it will be returned to CONTRACTOR for corrections or clarification.

CONTRACTOR shall make the necessary corrections and resubmit or shall respond in detail to ENGINEER's comments and request that the submittal be accepted without modification. Failure by CONTRACTOR to provide corrections or clarifications to schedule submittals as directed by ENGINEER shall constitute reason to withhold approval of any Application for Payment.

12.1.3.2 ENGINEER's review of schedule submittals shall not relieve CONTRACTOR from responsibility for any variation from the requirements of the Contract Documents unless CONTRACTOR has, in writing, called CITY's attention to each such variation at the time of submission and CITY has given written approval of each such variation; nor shall any approval by CITY or ENGINEER relieve CONTRACTOR from responsibility for compliance with any provision of the Contract Document.

12.1.4. Time of Performance

The Contract Time establishes the period and duration in which CITY expects the Work to be performed. Any schedule which shows completion ahead of the Contract Time shall include additional supporting data to explain the basis of the shorter time for performance. ENGINEER shall review the supporting data, and make recommendations to CITY as to the acceptability of the shorter schedule. CITY may (1) notify CONTRACTOR that the Contract Time is being adjusted by Change Order to reflect the shorter schedule duration or (2) elect not to adjust the present Contract Time and allow the use by all parties of the increased schedule flexibility that the shorter schedule represents. In any case CITY shall not be responsible for any costs, actual or anticipated, resulting from any delay to CONTRACTOR that prevents completion of any part or all of the Work unless it prevents completion by the Contract Time(s); nor shall the CITY be obligated to incur any additional costs for administration or inspection of accelerated Work.

12.1.5. Changes

It is understood that revisions in the schedule are inherent in the nature of construction. This may require that changes be made in the schedule to reflect the dynamic nature of the design and the Work.

Actions by CITY, CONTRACTOR, ENGINEER or DESIGN ENGINEER that may affect the progress of any part or all of the Work shall make use of the flexibility in the Progress Schedule, often expressed as schedule float or slack time, and that which may result from changes in the sequencing of individual work items, to limit the impact of such actions. The concept of shared schedule flexibility shall not be limited by the inclusion of restraints, logic or imposed dates into the schedule that cannot be reasonably justified.

Excessive use of schedule flexibility by any party is contrary to this sharing concept and may be cause for denial of a request for an extension in Contract Time or, in the case of excessive use by the CITY, ENGINEER or DESIGN ENGINEER, may be cause for an extension in Contract Time if so allowed by Article 11.

12.1.6. As-Built Schedule

After Substantial Completion, but prior to Final Payment, CONTRACTOR shall submit an as-built schedule. The schedule shall reflect (1) all as-built critical paths, (2) all contract activities, including all added activities, with their actual start and finish dates, (3) the actual number of separate work days during which work was performed on each activity, and (4) the actual number of man-days that were required to complete each activity.

ARTICLE 13 - WARRANTY AND GUARANTEE, TESTS AND INSPECTIONS, CORRECTION, REMOVAL OR ACCEPTANCE OF DEFECTIVE WORK

13.1 Warranty and Guarantee

CONTRACTOR warrants and guarantees that all Work will be in accordance with the Contract Documents and will not be defective. All defective Work, whether or not in place, may be rejected, corrected or accepted as provided in this Article. The obligations of CONTRACTOR under this paragraph shall be in addition to and not in limitation of any obligation imposed upon him by special guarantees required by the Contract Documents or otherwise prescribed by Laws or Regulations.

13.2 Access to Work

CITY, ENGINEER, DESIGN ENGINEER, their representatives, testing agencies and governmental entities with jurisdiction shall be permitted access to the Work for their observation, inspection and testing. CONTRACTOR shall provide proper and safe conditions for such access.

13.3 Tests and Inspections

13.3.1 CONTRACTOR shall give ENGINEER timely notice of readiness of the Work for all required inspections, tests or approvals. Inspections, tests or observations by ENGINEER, DESIGN ENGINEER, CITY or their agents may be performed at their discretion to provide information to the CITY on the progress of the Work. However, such information is not intended to fulfill the CONTRACTOR's obligations in accordance with the Contract Documents.

13.3.2 If any law, ordinance, rule, regulation, code or order of any public body, government entity or court having jurisdiction requires any Work (or part thereof) to specifically be inspected, tested or approved, CONTRACTOR shall assume full responsibility therefore, pay all related costs, schedule related activities at appropriate times, and furnish ENGINEER the required certificates of inspection, testing or approval. CONTRACTOR shall also be responsible for and shall pay all costs, in connection with any inspection or testing required in connection with CITY's or ENGINEER's acceptance of a proposed manufacturer, fabricator, supplier or distributor of materials or equipment proposed to be incorporated in the Work, or of material or equipment submitted for approval prior to CONTRACTOR's purchase thereof for incorporation of the Work. All inspections, tests or approvals shall be performed by persons or organizations acceptable to CITY and ENGINEER.

13.3.3 The CONTRACTOR shall perform sufficient testing and inspection of the Work to support the Warranty and Guaranty requirements.

13.3.4 Neither observations by ENGINEER or CITY nor inspections, tests or approvals by others shall relieve CONTRACTOR from his obligations to perform the Work in accordance with the Contract Documents.

13.3.5 If any testing, inspection or approval under this paragraph reveal defective Work, CONTRACTOR shall not be allowed to receive any associated costs and CITY shall be entitled to deduct from the Contract Price, by issuing a Change Order, CITY's costs arising out of the defective Work, including costs of repeated procedures, compensation for ENGINEER's and DESIGN ENGINEER's services and other related costs.

13.4 Uncovering Work

13.4.1 If any Work that is to be inspected, tested or approved is covered without written concurrence of ENGINEER, it must, if requested by ENGINEER, be uncovered for observation. Such uncovering shall be at CONTRACTOR's expense and will exclude the right to an increase in the Contract Price or Contract Time unless CONTRACTOR has given ENGINEER timely written notice of CONTRACTOR's

intention to cover such Work and ENGINEER has not acted with reasonable promptness in response to such notice.

13.4.2 If ENGINEER considers it necessary or advisable that covered Work be observed by ENGINEER or inspected or tested by others, CONTRACTOR, at ENGINEER's request, shall uncover, expose or otherwise make available for observation, inspection or testing as ENGINEER may require, that portion of the Work in question, furnishing all necessary labor, material and equipment. If it is found that such Work is defective, CONTRACTOR shall bear all the expenses of such uncovering, exposure, observation, inspection and testing and of satisfactory reconstruction, including compensation for additional professional services, any additional expenses experienced by the CITY due to delays to others performing additional work, other contractual obligations, and attorneys' fees and CITY shall be entitled to issue an appropriate deductive Change Order. CONTRACTOR shall further bear the responsibility for maintaining the schedule and will not be allowed an increase in Contract Price or Contract Time due to the uncovering. If, however, such Work is not found to be defective, and paragraph 13.4.1 is not applicable, CONTRACTOR shall be allowed an increase in the Contract Price or the Contract Time, or both, directly attributable to such uncovering, exposure, observation, inspection, testing and reconstruction if it makes a claim therefore as provided in Article 10.

13.5 Correction or Removal of Defective Work

CONTRACTOR shall promptly, without cost to CITY and as specified by ENGINEER, either correct any defective Work, whether or not fabricated, installed or completed, or, if the Work has been rejected by ENGINEER, remove it from the site and replace it with conforming Work. The CONTRACTOR shall bear the cost of repairing or replacing all Work and property of the CITY or others destroyed or damaged or in any way impacted by such correction or removal.

13.6 Acceptance of Defective Work

If, instead of requiring correction or removal and replacement of defective Work, CITY prefers to accept it, CITY may do so. In such case, if acceptance occurs prior to Final Payment, CITY shall be entitled to issue a Change Order incorporating the necessary revisions in the Contract Documents, including appropriate reduction in the Contract Price. If the acceptance occurs after such Final Payment, an appropriate amount shall be paid by CONTRACTOR to CITY.

13.7 CITY May Correct defective Work

If CONTRACTOR fails within a reasonable time after written notice of ENGINEER to proceed to correct and to correct defective Work or to remove and replace rejected Work as required by ENGINEER in accordance with this Article, or if CONTRACTOR fails to perform the Work in accordance with the Contract Documents (including any requirements of the Progress Schedule), CITY may, after seven days written notice to CONTRACTOR, correct and remedy any such deficiency. In exercising its rights under this paragraph CITY shall proceed with reasonable promptness. To the extent necessary to complete corrective and remedial action, CITY may exclude CONTRACTOR from all or part of the site, take possession of all or part of the Work, and suspend CONTRACTOR's services related thereto, take possession of CONTRACTOR's tools, appliances, construction equipment and machinery at the site and incorporate in the Work all materials and equipment stored at the site or for which CITY has paid CONTRACTOR but which are stored elsewhere. CONTRACTOR shall allow CITY, CITY's representatives, agents and employees such access to the site as may be necessary to enable CITY to exercise its rights under this paragraph. All direct and indirect costs of CITY in exercising such rights shall be charged against CONTRACTOR in an amount documented by CITY,

and CITY will be entitled to issue a Change Order incorporating the necessary revisions in the Contract Documents and a reduction in the Contract Price.

Such direct and indirect costs shall include, in particular but without limitation, all corrective or replacement costs, compensation for additional professional services required and all costs of repair and replacement of property of others destroyed, impacted or damaged by correction, removal or replacement of CONTRACTOR's defective Work. CONTRACTOR shall not be allowed an increase in the Contract Price or the Contract Time because of any delay in the performance of the Work attributable to the exercise by CITY of CITY's rights hereunder.

13.8 Warranty Period

13.8.1 The Warranty Period shall commence on the date of Substantial Completion of the entire Work, or a later date if so specified in the Contract Documents , and extend until expiration period may be prescribed by Laws or Regulations or by the terms of any applicable special guarantee or specific provision of the Contract Documents.

13.8.2 If within the designated Warranty Period, the Work, or any part of the Work, is discovered to be defective, CONTRACTOR shall promptly, without an adjustment in Contract Price and in accordance with CITY's or ENGINEER's written instructions, either correct that defective Work, or if it has been rejected by CITY or ENGINEER, remove it from the site and replace it with non-defective Work. If circumstances warrant it, including, but not limited to, in an emergency, CITY may have the defective Work corrected or the rejected Work removed and replaced. In that event, CONTRACTOR shall not be allowed to recover any associated costs, and he shall reimburse CITY for all direct, indirect and consequential costs of CITY, or CITY shall be entitled to issue a Change Order to incorporate an appropriate decrease in Contract Price if prior to Final Payment. CITY shall reserve and retain all of its rights and remedies at law and equity against CONTRACTOR and its Surety for damages and for corrections of any and all latent defects.

13.9 Extended Warranties and Guarantees

13.9.1 CITY may at its sole discretion advance or defer the date of commencement of the Warranty Period, in which case CONTRACTOR shall maintain the warranties and guarantees in full force and effect until the revised date for commencement of the Warranty Period. If such advancement or deferral in the date for commencement of the Warranty Period causes an increase or decrease in the cost of the warranties and guarantees provided by CONTRACTOR, CITY shall make an adjustment in Contract Price or Contract Time, as provided in Articles 10 and 11.

13.9.2 In circumstances where CITY undertakes Partial Utilization of a portion of the Work which was specifically identified in the Contract Documents, CONTRACTOR shall maintain the warranties and guarantees in full force and effect during the period between the applicable commencement of Partial Utilization date, and the date of commencement of the Warranty Period, and for such warranties and guarantees CONTRACTOR shall receive no adjustment in Contract Price.

13.9.3 In special circumstances where CONTRACTOR fails to complete the Work, or a separable portion of the Work within the corresponding Contract Time, including any authorized adjustments, and CITY undertakes Partial Utilization, CONTRACTOR shall maintain the warranties and guarantees in full force and effect during the period between the applicable commencement of Partial Utilization date,

and the date of commencement of the Warranty Period, and for such warranties and guarantees CONTRACTOR shall receive no adjustment in Contract Price.

13.10 Special Maintenance Requirements

In special circumstances where the Work, or a designated part, reaches Substantial Completion, but as provided in the Contract Documents, is not placed in continuous service until the commencement of the Warranty Period, CONTRACTOR shall maintain the Work, or designated part, in good order and in proper working condition, provide suitable drainage, and take all other actions as are necessary for its protection during the period between the applicable Substantial Completion date and the date of commencement of the Warranty Period, and for such maintenance CONTRACTOR shall receive no adjustment in Contract Price. In the event that Work suffers loss or damage, however caused, CONTRACTOR shall rebuild, repair, restore, and make good without an increase in Contract Price all losses or damages to any portion of any Work and shall without an increase in Contract Price provide suitable drainage and erect such temporary structures and take all other actions as are necessary for its protection. Suspension of Work or the granting of an extension in Contract Time for any cause shall not relieve CONTRACTOR of his responsibility for the Work, or designated part, as specified in this paragraph.

13.11 Extended Warranty Period Due to Defective Work

Any defective Work that is either corrected or rejected and replaced will be warranted and guaranteed for a period or one (1) year from the date of such correction or removal and replacement, even if it had previously been corrected or replaced, in accordance with the provisions of this Article 13. If within such extended Warranty Period, that Work is once again found to be defective, CITY shall be entitled to all of CITY's rights and remedies under this Article.

ARTICLE 14 - PAYMENTS TO CONTRACTOR AND COMPLETION

14.1 Schedules

At least ten days prior to submitting the first Application for Payment, CONTRACTOR shall (except as otherwise specified in the General Requirements) submit to ENGINEER acceptable Progress and Shop Drawing Submittal Schedules, acceptable manpower and cash flow projections, and a final schedule of values of the Work. These schedules shall be satisfactory in type, form and substance to ENGINEER. ENGINEER may require the schedule of values to be adjusted if in its opinion the breakdown does not accurately reflect the true distribution of the Contract Price. Upon written approval of the schedule of values by ENGINEER, it shall be incorporated into a form of Application for Payment acceptable to CITY. After the first Application for Payment, Contractor shall submit a revised, updated Progress Schedule, satisfactory in type, form and substance to the ENGINEER with each subsequent Application for Payment. The Contractor will not be entitled to receive a Progress Payment until the revised Progress Schedule is approved by the ENGINEER.

14.2 Application for Payment

CONTRACTOR shall submit to ENGINEER not later than the first working day of each month an Application for Payment completed and signed by CONTRACTOR covering the Work completed during the previous month and accompanied by such supporting documentation as is required by the Contract Documents and also as ENGINEER may reasonably require. On each Application for Payment, CONTRACTOR shall (1) list the name and address of each of its Subcontractors and Suppliers who have performed Work or provided supplies or material during the time period of Work reflected by the Application and(2) submit certified

payroll sheets for his own forces and all Subcontractors for the month preceding this application. After the first Application for Payment, CONTRACTOR shall include an affidavit stating that all previous progress payments received on account of the Work have been applied (1) to discharge CONTRACTOR's obligations and (2) to pay in full (less retainage) all amounts owed to its Subcontractors and Suppliers reflected in prior Applications for Payment. CONTRACTOR shall on the Application for Payment form note and explain when it has not discharged its obligations or paid in full (less retainage) all amounts owed as stated above. Neither CITY or ENGINEER is under any duty or obligation whatsoever to any Subcontractor, Supplier, laborer or any other party to ensure that payments due and owing by CONTRACTOR to any of them are or will be made.

14.3 Materials on Site

14.3.1 CITY may, at its sole option, pay an amount equal to ninety percent (90%) of the value of materials and equipment not incorporated into the Work but delivered and suitably stored, less in each case the aggregate of payments previously made. In no event shall payments for materials and equipment stored on site exceed ninety percent (90%) of the value of the related cost for the specific item of work shown in the schedule of values regardless of the stated value of the material or equipment. CITY may, at its sole option, pay an amount equal to ninety percent (90%) of the value of materials and equipment not incorporated into the Work and stored off site if stored in a manner acceptable to CITY, as stated above for on-site stored materials. When payment to CONTRACTOR is made for stored material and equipment, CONTRACTOR shall submit invoices marked paid by the Supplier with the Application for Payment following payment to CONTRACTOR documenting that CONTRACTOR has paid for said materials and equipment or the previously paid amount shall be deducted from remaining payments or retainage for stored materials and equipment not so properly documented.

14.3.2 If payment is requested on the basis of materials and equipment not incorporated into the Work but delivered and suitably stored at the site or at another location agreed to in writing, the Application for Payment shall be accompanied by such data, satisfactory to CITY, as will establish CITY's title to the material and equipment and protect CITY's interest therein, including applicable insurance. In no event shall the quantity of material and equipment submitted for payment be in excess of the actual final installed quantity. CITY may deduct from the final Application for Payment amounts paid CONTRACTOR for material and equipment not finally installed in the Work.

14.4 CONTRACTOR's Warranty of Title

The CONTRACTOR warrants and guarantees that title to all Work, materials and equipment covered by any Application for Payment, whether incorporated in the Project or not, will pass to CITY at the time of payment free and clear of all liens, claims, security interests and encumbrances (hereafter referred to as "Liens").

14.5 Review and Payment

14.5.1 ENGINEER will, within twenty days after receipt of each Application for Payment, either indicate in writing a recommendation of payment and present the Application to CITY, or return the Application to CONTRACTOR indicating in writing ENGINEER's reasons for refusing to recommend payment. In the latter case, CONTRACTOR may make the necessary corrections and resubmit the Application.

CITY shall, within twenty days of presentation to it of the Application for Payment by ENGINEER, giving consideration to ENGINEER's recommendation, but not being bound thereby, pay CONTRACTOR the amount to which he is entitled.

14.5.2 ENGINEER's recommendation of any payment requested in an Application for Payment will constitute a representation by ENGINEER to CITY, based on on-site observations of the Work in progress and on ENGINEER's review of the Application for Payment and the accompanying data and schedules, that the Work has progressed to the point indicated; that to the best of ENGINEER's knowledge, information and belief, the quality of the Work is in accordance with the Contract Documents (subject to an evaluation of the Work as a functioning Project prior to or upon Substantial Completion; to the results of any subsequent tests called for in the Contract Documents; or to any qualifications stated in the recommendation) and that CONTRACTOR is entitled to payment of the amount recommended. However, by recommending any such payment, ENGINEER will not thereby be deemed to have represented that any examination has been made to ascertain how or for what purpose CONTRACTOR has used the monies paid or to be paid to CONTRACTOR on account of the Contract Price, or that title to any Work, materials or equipment has passed to CITY free and clear of any lien.

14.5.3 ENGINEER may refuse to recommend the whole or any part of any payment if, in its opinion, it would be incorrect to make such representations to CITY. ENGINEER may also refuse to recommend any such payment, or, because of subsequently discovered evidence or the results of subsequent inspections or tests, nullify any such payment previously recommended to such extent as may be necessary in ENGINEER's opinion to protect CITY from loss or anticipated loss because: (1) the Work is defective, or completed Work has been damaged requiring correction or replacement or, (2) written claims have been made against CITY or Liens have been filed in connection with the Work or, (3) the Contract Price has been reduced because of Change Order or, (4) CITY has been required to correct defective Work or complete the Work or, (5) of CONTRACTOR's unsatisfactory prosecution of the Work in accordance with the Contract Documents or, (6) of CONTRACTOR's failure to make payment to Subcontractors, Suppliers or for labor, or (7) of CONTRACTOR's failure to provide acceptable schedule submittals for inclusion into the Application for Payment or, (8) of CONTRACTOR's failure to properly maintain and submit with Application for Payment Record Documents.

14.6 Retainage

14.6.1 The value of each Application for Payment shall be equal to the total value of the work performed to date, less an amount retained, and less payments previously made and amounts withheld in accordance with this Article.

14.6.2 Payments will be made in an amount equal to ninety percent (90%) of the Work completed. Upon Substantial Completion of all of the Work, CITY may, at its sole option, pay an amount sufficient to increase total payments to CONTRACTOR to ninety-five percent (95%) of the value of the completed work.

14.7 Overpayment

Any overpayment by CITY to CONTRACTOR shall be promptly repaid to CITY upon demand.

14.8 Final Application for Payment

14.8.1 After CONTRACTOR has completed all corrections to the satisfaction of CITY and ENGINEER as verified by Final Inspection and delivered all maintenance and operating instructions, schedules, guarantees, warranties, Bonds, certificates of inspection, marked-up record documents and other documents, all as required by the Contract Documents and acceptable to CITY, and after ENGINEER has indicated that Work is acceptable, CONTRACTOR may make application for Final Payment following the procedure for Applications for Payment.

14.8.2 The final Application for Payment shall be accompanied by all documentation Called for in the Contract Documents and such other data and schedules as ENGINEER may reasonably require, together with complete and legally effective releases or waiver (satisfactory to CITY) of all Liens and claims arising out of or filed in connection with the Work. In lieu thereof and as approved by CITY, CONTRACTOR may furnish receipts or releases in full with an affidavit of CONTRACTOR that the releases and receipts include all labor, services, material and equipment for which a Lien or claim could be filed, and that all payrolls, material and equipment bills and other indebtedness in connection with the Work for which CITY might in any way be responsible, have been paid or otherwise satisfied. CITY shall require consent of the Surety to Final Payment.

14.9 Final Payment and Acceptance

14.9.1 If, on the basis of ENGINEER's observations of the Work during construction and Final Inspection, and ENGINEER's review of the final Application for Payment and accompanying documentation all as required by the Contract Documents, ENGINEER is satisfied that the Work has been completed and CONTRACTOR has fulfilled all of its obligations under the Contract Documents, ENGINEER will, within twenty days after receipt of the final Application for Payment, indicate in writing its recommendation of payment and present the Application to CITY for payment. Thereupon ENGINEER will give written notice to CITY and CONTRACTOR that the Work is acceptable.

Otherwise, ENGINEER will return the Application to CONTRACTOR, indicating in writing the reasons for refusing to recommend Final Payment, in which case CONTRACTOR shall make the necessary corrections and resubmit the Application. If the Application and accompanying documentation are appropriate as to form and substance, CITY shall, within twenty days after receipt from ENGINEER, pay CONTRACTOR the amount due giving consideration to the recommendations of ENGINEER, but not being bound thereby.

14.9.2 After receipt of the ENGINEER's written notice that the Work is acceptable and prior to Final Payment, CONTRACTOR shall submit an affidavit, in a form acceptable to CITY, certifying that the Bonds and insurances required under Article 5 are in effect and will not be allowed to expire for the required period of time.

14.10 Waiver of Claims

14.10.1 The making and acceptance of Final Payment shall constitute:

14.10.2 A waiver of all claims by CITY against CONTRACTOR, except claims arising from unsettled Liens, from defective Work appearing after final inspection, from fraud or gross negligence amounting to fraud, or from failure to comply with the Contract Documents or the terms of any special guarantees specified therein or the terms of any Bonds; however, it shall not constitute a waiver by CITY of any rights in respect of CONTRACTOR's continuing obligations under the Contract Documents; and

14.10.3 A waiver of all claims by CONTRACTOR against CITY, ENGINEER, and DESIGN ENGINEER other than those enumerated in the Final Application for Payment.

14.11 CITY's Obligations

14.11.1 In no event shall any interest be due and payable to CONTRACTOR on any of the sums retained by CITY pursuant to any of the terms or provisions of any of the Contract Documents.

14.11.2 Any provision to the contrary notwithstanding, CITY shall not be obligated to make any payment to CONTRACTOR and may withhold partial payments if any one or more of the following conditions exists: (1) CITY has reason to believe CONTRACTOR is in default of any of its obligations or otherwise is in default under any of the Contract Documents; (2) Any part of such payment is attributable to Work which is defective, provided, however, payment shall be made for Work which is performed in accordance with the Contract Documents and is not defective; (3) CONTRACTOR has failed to make payments promptly to Subcontractors and Suppliers or for labor and material for which CITY has made payment to CONTRACTOR; (4) If CITY, in its good faith judgment, determines that the portion of the Contract Price remaining unpaid will not be sufficient to complete the Work in accordance with the Contract Documents; (5) CONTRACTOR has failed to maintain progress of the Work in accordance with the Progress Schedule or CONTRACTOR has failed to meet an interim completion date or the Substantial or Final Completion Date.

14.12 Partial Utilization

14.12.1 Use by CITY of completed portions of the Work may be accomplished at the option of CITY prior to Substantial Completion of all the Work subject to the following:

4.12.1.1 CITY at any time may request CONTRACTOR in writing to permit CITY to use any part of the Work which CITY believes to be substantially complete and which may be so used without significant interference with construction of the other parts of the Work. If CONTRACTOR agrees, CONTRACTOR shall certify to CITY that said part of the Work is substantially complete and request ENGINEER to issue a certificate of Substantial Completion for that part of the Work. CONTRACTOR at any time may notify CITY and ENGINEER in writing when CONTRACTOR considers that a portion of the Work which has been identified in the Contract Documents as eligible for Partial Utilization is substantially complete. Within a reasonable time thereafter, CITY, CONTRACTOR, and ENGINEER shall make an inspection of that part of the Work to determine its status of completion. If ENGINEER does not consider that part of the Work to be substantially complete, ENGINEER will notify CONTRACTOR in writing giving the reasons therefore. If ENGINEER considers that part of the Work to be substantially complete, ENGINEER will execute and deliver to CITY and CONTRACTOR a certificate to that effect, fixing the date of Substantial Completion as to that part of the Work, and attaching a list of minor items as to that part of the Work to be completed or corrected before Final Payment.

14.12.1.2 Prior to issuing a certificate of Substantial Completion as to part of the Work, ENGINEER will deliver to CITY and CONTRACTOR a written recommendation as to the division of responsibilities pending Final Payment between CITY and CONTRACTOR with respect to security, operation, safety, maintenance, utilities, insurance and the Warranty Period for that part of the Work. CITY shall have the right to exclude CONTRACTOR from any part of the Work which ENGINEER has so

certified to be substantially complete, but CITY shall allow CONTRACTOR reasonable access to complete or correct items described above.

14.12.1.3 In lieu of the issuance of a certificate of Substantial Completion as to part of the Work, CITY may take over operation of a facility constituting part of the Work whether or not it is substantially complete if such facility is functionally and separately useable; provided that prior to any such takeover, CITY and CONTRACTOR have agreed in writing as to the division of responsibilities between CITY and CONTRACTOR for security, operations, safety, maintenance, Warranty Period, utilities and insurance with respect to such facility. During such utilization and prior to Substantial Completion of that portion of the Work, CITY shall allow CONTRACTOR reasonable access to complete or correct items and to complete other related Work.

14.13 Substantial Completion

14.13.1 When CONTRACTOR considers the entire Work to have progressed to the point where it is substantially complete, CONTRACTOR shall, in writing to ENGINEER, certify that the entire Work is substantially complete, submit to ENGINEER all operation and maintenance manuals and instructions and spare parts required by the Contract Documents, and request that ENGINEER issue a Certificate of Substantial Completion. Within a reasonable time thereafter, CITY, CONTRACTOR and ENGINEER shall make an inspection of the Work to determine the status of completion. If ENGINEER does not consider the Work substantially complete, ENGINEER will notify CONTRACTOR in writing giving the reasons therefore. CONTRACTOR shall then accomplish the requisite Work and then recertify that the entire Work is substantially complete. If ENGINEER considers the Work substantially complete, ENGINEER will prepare and deliver to CONTRACTOR and CITY a Certificate of Substantial Completion which shall fix the date of Substantial Completion. There shall be attached to the certificate a list of items (which should be minor in scope and nature) to be completed or corrected before Final Payment. CONTRACTOR shall continue to be responsible for maintaining the Work until the date of certification of Substantial Completion, or longer if so required by the Contract Documents.

The work will be substantially complete when:

(1) The water and sewer mains are installed and connected to the existing system.

(2) All the following related tests/inspections and Florida Department of Environmental Protection permit clearances complete and approved.

a) Water distribution system:

_____ backfill density tests
_____ hydrostatic pressure test
_____ bacteriological test
_____ "Clearance For Use" Letter by FDEP

b) Sewage collection system:

_____ gravity main backfill density tests
_____ manhole backfill density test submittal
_____ gravity main low-air pressure test
_____ gravity main lamp inspection
_____ manhole inspection
_____ "Clearance For Use" Letter by FDEP

14.13.2 CITY shall have the right to exclude CONTRACTOR from the Work, or specified part, after the date of Substantial Completion, but CITY shall allow CONTRACTOR reasonable access to complete or correct items on the list attached to the Certificate of Substantial Completion.

14.14 Final Inspection

Upon written notice from CONTRACTOR that the minor items described in the list attached to the Certificate of Substantial Completion have been completed, ENGINEER will make an inspection with CITY and CONTRACTOR and will notify CONTRACTOR in writing of the results of this inspection as to the items of the Work that appear to be incomplete, non-conforming or defective. CONTRACTOR shall immediately take such measures as are necessary to remedy such deficiencies, and notify ENGINEER upon completion. The Final Inspection by ENGINEER with CITY and CONTRACTOR will verify completion of all items.

14.15 CONTRACTOR's Continuing Obligation

CONTRACTOR's obligation to perform and complete the Work in accordance with the Contract Documents shall be absolute. Neither recommendation of any progress or Final Payment by ENGINEER, nor the issuance of a Certificate of Substantial Completion, nor any payment by CITY to CONTRACTOR nor any Partial Utilization by CITY nor any act of acceptance by CITY nor any failure to do so, nor any review and approval of the Shop Drawings or samples, nor any review of a Progress Schedule, nor the issuance of a notice of acceptability by ENGINEER, nor any correction of defective Work by CITY will constitute an acceptance of Work not in accordance with the Contract Documents or a release of CONTRACTOR's obligation to perform the Work in accordance with the Contract Documents except as provided in a waiver of claims at the time of making and acceptance of Final Payment.

ARTICLE 15 - SUSPENSION OF WORK AND TERMINATION

15.1 CITY May Stop the Work

If the Work is defective and the CONTRACTOR has been notified by ENGINEER or CITY, or if CONTRACTOR fails to furnish or perform the Work in such a way that the completed Work will conform to the Contract Documents, or if CONTRACTOR fails to supply sufficient supervisory personnel or skilled workmen or suitable materials or equipment, or if CONTRACTOR fails to obtain, maintain or renew insurance in conformance with the Contract Documents in a form acceptable to CITY, or if any insurance company CONTRACTOR has obtained insurance from declares bankruptcy or is declared bankrupt, or if CONTRACTOR fails to prosecute the Work without endangering persons or property, CITY may order CONTRACTOR to stop the Work, or any portion thereof, until the cause for such order has been eliminated. CITY's order to stop the Work may be communicated through ENGINEER or by CITY. This right of CITY to stop the Work shall not give rise to any duty on the part of CITY or ENGINEER to exercise this right for the benefit of CONTRACTOR or any other party. CONTRACTOR shall bear all direct, indirect, and consequential costs of such order to stop the Work (including but not limited to fees and charges of engineers, attorneys and other professionals, any additional expenses incurred by CITY due to delays to others performing work under a separate contract with CITY, and other obligations), and CONTRACTOR shall further bear the responsibility for maintaining the Progress Schedule and shall not be entitled to any extension of Contract Time or increase in the Contract Price. CITY shall be entitled to deduct any expenses so incurred from the Contract Price by issuing a Change Order.

15.2 Suspension for Convenience

15.2.1 Without invalidating the Agreement, and without notice to any surety, CITY may, at any time, order CONTRACTOR in writing to stop, delay or interrupt Work for such a period of time as CITY may deem appropriate. Upon receipt of that order, CONTRACTOR shall immediately proceed in

accordance with any specific provisions or instructions, protect and maintain the Work, and make reasonable and diligent efforts to mitigate costs associated with the suspension order.

15.2.2 If any suspension of Work under this paragraph causes an increase or decrease in CONTRACTOR's cost or the time required to perform or complete any part of the Work, CITY shall make a change in Contract Price or Contract Time, as provided in Article 10 and 11; except that no change in Contract Price or Contract Time will be made for any suspension of Work to the extent that performance would have been suspended anyhow by causes not meeting the criteria in Article 11, or for which an adjustment is provided or excluded under any other provision of the Contract Documents.

15.3 Termination for Cause

15.3.1 CITY may upon the occurrence of any one or more of the following events terminate the services of CONTRACTOR:

15.3.1.1f a trustee, receiver, custodian or agent of CONTRACTOR is appointed under applicable law or under contract, whose appointment or authority to take charge of property of CONTRACTOR is for the purpose of enforcing a Lien against such property or for the purpose of general administration of such property for the benefit of CONTRACTOR's creditors;

15.3.1.2If CONTRACTOR admits in writing an inability to pay its debts generally as they become due;

15.3.1.3If CONTRACTOR fails to perform the Work in accordance with the Contract Documents (including, but not limited to, failure to supply sufficient skilled workers, sufficient supervisory personnel, or suitable materials or equipment or failure to adhere to the Progress Schedules);

15.3.1.4If CONTRACTOR discontinues prosecution of the Work or any portion thereof;

15.3.1.5If CONTRACTOR allows any final judgment against it to remain unsatisfied for a period of ten days;

15.3.1.6If CONTRACTOR disregards laws, policies, court orders, or administrative directives, etc. of any governmental body, agency or court having jurisdiction;

15.3.1.7If CONTRACTOR disregards the authority of ENGINEER;

15.3.1.8If CONTRACTOR otherwise violates in any substantial way any provisions of the Contract Documents; or

15.3.1.9If CONTRACTOR fails to promptly pay Subcontractors, Suppliers, Material men, Laborers, etc.

15.3.2 As it is recognized that if CONTRACTOR is adjudged bankrupt or makes a general assignment for the benefit of creditors or if a receiver is appointed on account of its insolvency, such could impair or frustrate CONTRACTOR's performance of the Work, therefore it is agreed that upon occurrence of any such event, CITY shall be entitled to request CONTRACTOR or its successor to provide adequate assurance of future performance in accordance with the terms and conditions of the Contract Documents.

Failure to provide said adequate assurance within seven (7) days of the delivery of the request shall entitle CITY to terminate CONTRACTOR. In all events pending receipt of adequate assurance of performance and actual performance in accordance herewith, CITY shall be entitled to proceed with the Work with its own forces or with their contractors on a time and material or other appropriate basis the cost of which will be back charged against CONTRACTOR. CITY shall be entitled to deduct these costs from the Contract Price by issuing a Change Order.

15.3.3 CITY may, after giving CONTRACTOR and surety seven (7) days written notice, and to the extent permitted by laws and regulations, terminate the services of CONTRACTOR, exclude CONTRACTOR from the site and take possession of the Work and of all CONTRACTOR's tools, appliances, construction equipment and machinery at the site and use the same to the full extent they could be used by CONTRACTOR (without liability to CONTRACTOR for trespass or conversion), incorporate in the Work all materials and equipment stored at the site or for which CITY has paid CONTRACTOR but which are stored elsewhere, and finish the Work as CITY may deem expedient. CONTRACTOR shall assign all of its interest in any or all Sub-Agreements to CITY upon CITY's request. In such case CONTRACTOR shall not be entitled to receive any further payment until the Work is finished. If the unpaid balance of the Contract Price exceeds the direct, indirect and consequential costs of completing the Work (including but not limited to fees and charges of engineers, architects, attorneys and other professionals and court and arbitration costs including costs for appellate proceedings) such excess will be paid to CONTRACTOR. If such costs exceed such unpaid balance, CONTRACTOR shall pay the difference to CITY. If CONTRACTOR leaves the site at any time during the seven day period, CITY shall have the right to secure the site to protect the property from damage and to insure the health and safety of the public.

15.3.4 Notwithstanding the above notice period, in the event of an emergency, the CITY may take over the site and perform any or all of the activities set out above immediately. CITY shall provide notice of such takeover within 24 hours after its occurrence.

15.3.5 Where CONTRACTOR's services have been terminated by CITY, the termination shall not affect any rights of CITY against CONTRACTOR then existing or which may thereafter accrue. Any retention or payment due CONTRACTOR by CITY will not release CONTRACTOR from liability.

15.3.6 CITY may, at its sole discretion, permit CONTRACTOR to continue to perform work when CONTRACTOR is in default, however caused. Such a decision by CITY shall in no way operate as a waiver on the part of CITY of any of its rights under the Contract Documents.

15.4 Termination for Convenience

15.4.1 CITY may, without prejudice to any other right or remedy, terminate this Contract in whole or in part at any time for its convenience by giving CONTRACTOR and surety seven (7) days written notice. CITY shall have the right, in that event, to take over any or all of CONTRACTOR's materials, (whether stored on or off site) supplies, equipment, Sub-Agreements or other obligations to complete the Work and CONTRACTOR shall assign them to CITY upon CITY's request. CONTRACTOR shall proceed to complete any part of the Work, as directed by CITY, and shall settle all its claims and obligations under the Agreement.

15.4.2 In any such termination for the convenience of CITY, CONTRACTOR shall be paid for Work completed in accordance with the Contract Documents prior to receipt of the notice of termination, and for reasonable termination settlement costs relating to commitments which had become firm prior to the termination; however, payment to CONTRACTOR will exclude any and all anticipated

supplemental costs, administrative expenses overhead and profit on uncompleted Work. CONTRACTOR shall justify its claims as requested by CITY with thorough, accurate records and data.

15.4.3 If, after notice of Termination for Cause of CONTRACTOR, it is determined that CONTRACTOR was not in default, the termination shall be deemed to have been for the convenience of CITY. In such event CONTRACTOR may recover from CITY payment in accordance with paragraph 15.4.2.

15.5 CONTRACTOR May Stop Work or Terminate

If, through no act or fault of CONTRACTOR, or a Subcontractor or their agents or employees or any other person for whose acts they may be responsible, the Work is suspended for a period of more than ninety (90) days by CITY or under an order of court or other public authority, or ENGINEER fails to act on any Application for Payment within forty-five (45) days after it is submitted, or CITY fails for forty-five (45) days to pay CONTRACTOR any sum finally determined to be due, then CONTRACTOR may, upon seven (7) days written notice to CITY and ENGINEER, terminate the Agreement and recover from CITY payment for all Work executed and any expense sustained plus reasonable termination expenses. In addition and in lieu of terminating the Agreement, if ENGINEER has failed to act on an Application for Payment or CITY has failed to make any payment as aforesaid, CONTRACTOR may upon seven (7) days' notice to CITY and ENGINEER stop the Work until payment of all amounts then due. Except as specifically provided in this paragraph, these provisions shall not relieve CONTRACTOR of the obligation under Article 6 to carry on the Work in accordance with the Progress Schedule and without delay during disputes and disagreements with the CITY.

ARTICLE 16 - VALUE ENGINEERING INCENTIVE

16.1 This provision applies to any CONTRACTOR developed, prepared, and submitted Value Engineering Change Proposal (VECP). The following definitions shall apply to this article:

16.1.1 "CONTRACTOR's development and implementation costs" means those costs incurred in a VECP before CITY acceptance and those costs CONTRACTOR incurs specifically to make the changes required by CITY acceptance of a VECP.

16.1.2 "CITY costs" means those costs that result directly from evaluating and implementing the VECP and any net increases in the cost of testing, operations, maintenance, repair, replacement, spare parts, and support. They include ENGINEER's and DESIGN ENGINEER's charges to CITY in connection with evaluating and implementing the VECP and the cost of any consultant retained by CITY, ENGINEER or DESIGN ENGINEER to assist in the evaluation of the VECP. However, they do not include the normal administrative costs of processing the VECP.

16.1.3 "Contract savings" means the estimated reduction in CONTRACTOR's cost of performance resulting from acceptance of the VECP, minus CONTRACTOR's development and implementation costs (including Subcontractors' development and implementation costs).

16.1.4 "Value Engineering Change Proposal (VECP)" means a proposal that: (1) requires a change to the Contract Documents to implement, and (2) results in reducing the Contract Price or estimated cost without impairing in any way necessary functions or characteristics of the Project, provided that it does not involve a change in deliverable end-item quantities only.

16.2 As a minimum, CONTRACTOR shall include the following information in each VECP in sufficient detail to allow CITY a meaningful evaluation:

16.2.1 A description of the difference between the existing requirement in the Contract Documents and that proposed, the comparative advantages and disadvantages of each, a justification when an item's function or characteristics are proposed to be altered, and the effect of the change on the end items performance.

16.2.2 A list of all changes to the Contract Document that must be made if the VECP is accepted, including any suggested specification revisions (and also including any additional items such as new permits, regulatory entity approvals, etc.).

16.2.3 An itemized estimate of Contract savings, which shall contain at a minimum, separate, detailed cost estimates for both the requirement of the existing Contract Documents and the VECP, CONTRACTOR'S development and implementation costs, and any license fees or royalty payments to be made. CONTRACTOR's cost estimate for the VECP shall also include, but not be limited to, costs of any delays that may be associated with implementing the VECP and cost and claims of other contractors affected by the VECP. CONTRACTOR shall also provide a description and itemized estimate of costs CITY may incur in implementing the VECP, such as those defined above.

16.2.4 A statement of the time by which a Change Request or Change Order accepting the VECP must be issued in order to achieve the maximum cost reduction, noting any effect on the Contract Time(s) or Progress Schedule.

16.2.5 Identification of any previous submissions of the VECP.

16.3 CONTRACTOR shall submit VECP's to ENGINEER. ENGINEER shall notify CONTRACTOR of the status of the VECP within 45 days after ENGINEER receives it. If additional time is required, as determined by ENGINEER, CONTRACTOR shall be notified within the 45 day period and provided the reason for the delay and the expected date of CITY's decision. VECP's shall be processed expeditiously; however, CITY shall not be liable for any delay in acting upon a VECP. If additional information is required, ENGINEER shall inform CONTRACTOR, who shall expeditiously provide the required information, and failing to comply with said request shall waive the benefits under this Article.

16.4 If the VECP is not accepted by CITY, ENGINEER shall provide CONTRACTOR written notification of rejection. CONTRACTOR may withdraw, in whole or in part, any VECP not accepted by CITY within the period specified in the VECP. ENGINEER may require that CONTRACTOR provide written notification before undertaking significant expenditures for VECP effort. Nothing contained herein to the contrary, CITY is under no obligation to accept all or part of any VECP, and CITY may at its discretion reject a VECP in whole or in part for any reason. CONTRACTOR shall be responsible for CONTRACTOR's development and implementation costs and CITY costs incurred in connection with a rejected VECP. CITY will be entitled to an appropriate decrease in Contract Price for CITY costs incurred in connection with a rejected VECP.

16.5 Any VECP may be accepted in whole or in part by a Change Order citing this clause. CITY may accept the VECP, even though an agreement on price reduction has not been reached, by a Change Request ordering CONTRACTOR to proceed with the change. Until such Change Request is issued,

CONTRACTOR shall perform in accordance with the existing Contract Documents. CITY's decision to accept all or part of any VECP shall not be contestable by CONTRACTOR..

16.6 The CONTRACTOR's share of savings will be fifty percent (50%) of Contract savings.

16.7 Payment of any amount due CONTRACTOR for use of a VECP shall be authorized by a Change Order which (1) accepts the VECP, (2) reduces the Contract Price or estimated cost by the amount of Contract savings, and (3) provides CONTRACTOR'S share of savings by adding the amount calculated in 16.6 to the Contract Price as reduced in clause (2) herein.

16.8 CONTRACTOR shall include value engineering clauses in any Sub-Agreement of $50,000 or more and may include them in Sub-Agreements of lesser value. To compute any adjustment in the Contract Price, CONTRACTOR's VECP development and implementation costs shall include any Subcontractor's development and implementation costs that clearly result from the VECP, but shall exclude any value engineering incentive payments to Subcontractors. CONTRACTOR may choose any arrangement for Subcontractor value engineering incentive payments, provided that these payments are not made from CITY's share of the savings resulting from the VECP.

16.9 CONTRACTOR may restrict CITY's right to use any part of a VECP or the supporting data by marking the following legend on the affected parts:

> "These data, furnished under the Value Engineering Incentive clause of Contract _____, shall not be disclosed outside the CITY by CITY, ENGINEER or DESIGN ENGINEER, except as otherwise required by law, or duplicated, used, or disclosed, in whole or in part, for any purpose other than to evaluate a VECP submitted under the clause. This restriction does not limit the CITY's right to use information contained in these data if it has been obtained or is otherwise available from the CONTRACTOR or from another source without limitations."

If a VECP is accepted, CONTRACTOR hereby grants CITY unlimited rights in the VECP and supporting data, except that, with respect to data qualifying and submitted as limited rights technical data, CITY shall have the rights specified in the Change Order implementing the VECP and shall appropriately mark the data.

ARTICLE 17 - MISCELLANEOUS

17.1 Giving Notice

17.1.1 Whenever any provision of the Contract Documents requires the giving of written notice it shall be deemed to have been validly given as of the time of actual delivery if delivered in person; or if it is delivered by registered mail, delivery service, or telegram, charges prepaid, at the actual time of delivery at the last business address known to the giver of the notice.

17.1.2 Written notice to be delivered to CITY or ENGINEER or to any of its representatives by CONTRACTOR shall be delivered at the office stated in the Agreement, unless otherwise specified in writing to CONTRACTOR. Written notice to CONTRACTOR by CITY or ENGINEER shall be delivered to the individual or member of the firm or to an officer of the corporation for whom it is intended at the office stated in the Agreement, or such other office or individual designated by CONTRACTOR in writing to CITY.

17.2 Notice to Other Agencies

CONTRACTOR shall notify all public and private entities or agencies in accordance with any and all ordinances, laws, agreements, licenses, and any other directions of construction activity, disruption of access or services. CITY or ENGINEER shall not be responsible for any such notification.

17.3 Computation of Time

When any period of time is referred to in the Contract Documents by days, it shall be computed to exclude the first and include the last day of such period. If the last day of any such period falls on a Saturday or Sunday or on a Holiday, such day shall be omitted from the computation.

17.4 Claims for Injury or Damage to Person or Property

Should CITY or CONTRACTOR suffer injury or damage to person or property because of any error, omission or act of the other party or of any of the other party's employees or agents or others for whose acts the other party is legally liable, claim will be made in writing to the other party within a reasonable time from the first observance of such injury or damage. This provision shall not be construed as a substitute for or a waiver of the provisions of any applicable statute of limitations or repose.

17.5 No Conflict with Laws or Regulations

17.5.1 The duties, obligations, criteria or procedure imposed by these General Conditions and the rights and remedies made available are in addition to, and are not to be construed in any way as a limitation of any rights and remedies available to any or all of them which are otherwise imposed or available by Laws or Regulations, except that in the event that a specific part or detailed requirement of a provision, criterion or procedure in these General Conditions and a specific part or detailed requirement of a provision, criterion or procedure imposed or available by Laws or Regulations are in conflict the specific part or detailed requirement of Laws and Regulations shall govern. All other specific parts or detailed requirements in the provisions, criteria or procedures of the applicable Laws or Regulations and these General Conditions not in conflict shall remain in full force and effect and be read with the controlling specific part or detailed requirement.

17.5.2 The provisions of this paragraph will be as effective as if repeated specifically in the Contract Documents in connection with each particular duty, obligation, right and remedy to which they apply.

17.5.3 Each and every provision of law and clause required by law to be inserted in the Contract Documents shall be deemed to be inserted therein and the Contract shall be read and enforced as though it were included therein.

17.6 Partial Invalidity

If any provision of this contract is held by a court of competent jurisdiction to be invalid or unenforceable, such invalidity or un-enforceability shall not affect the other parts of this Contract if the rights and obligations of the parties contained herein are not materially prejudiced and if the intentions of the parties can continue to be effectuated. To that end, this contract is declared severable.

17.7 No Waiver of Rights, Duties

17.7.1 Except as otherwise specifically provided in the Contract Documents, no action or failure to act by the CITY, ENGINEER, CITY's Representative(s), or CONTRACTOR shall constitute a waiver of any right or duty afforded any of them under the Contract Documents, nor shall any such action or failure to act constitute an approval of or acquiescence of any breach thereunder.

17.7.2 All representations, indemnities, warranties and guarantees required by the Contract Documents, including the Warranty Period shall survive Final Payment and termination or completion of this Agreement.

17.8 Advertising

No advertising shall be permitted upon any part of the site or structures located on the site. News or press releases pertaining to the services, work product(s), or performance of CONTRACTOR under this Agreement or the Project to which it relates shall be at the sole discretion of CITY.

17.9 Venue

The location of any litigation arising between the parties shall only be in the courts of Volusia County, Florida.

17.10 Recovery of Damages

In no event shall CONTRACTOR be entitled to recover from CITY any indirect, incidental, or consequential damages in any proceeding arising out of or relating to this Agreement or breach thereof.

END OF SECTION

SECTION 00800

SUPPLEMENTARY CONDITIONS

1. INTRODUCTION

These Supplementary Conditions amend or supplement the General Conditions of the Construction Contract and other provisions of the Contract Documents as indicated below.

2. CONTRACTOR'S INSURANCE

2.1 General Liability Insurance

Bodily injury coverage shall be for not less than $1,000,000 for each occurrence and not less than $1,000,000 aggregate.

Property damage coverage shall be for not less than $500,000 each occurrence and $500,000 aggregate.

Personal injury coverage shall be for not less than $1,000,000 aggregate.

Bodily injury, personal injury, and property damage coverage shall be in a combined single limit of not less than $1,000,000 each occurrence and $1,000,000 aggregate.

2.2 Automobile Liability

Bodily injury coverage shall be for not less than $1,000,000 for each person and not less than $1,000,000 for each accident, per each occurrence.

Property damage coverage shall be for not less than $500,000 for each occurrence.

Bodily injury and property damage coverage shall be in a combined single limit of not less than $1,000,000 for each occurrence and $1,000,000 aggregate.

2.3 Employer's Liability Insurance.

Bodily Injury coverage by accident shall be for not less than $500,000 for each employee and $500,000 for each accident.

Bodily Injury coverage by Disease shall be for not less than $100,000 for each employee and $100,000 for each aggregate disease.

CONTRACTOR'S RESPONSIBILITIES

ADD THE FOLLOWING PARAGRAPH TO ARTICLE 6 OF THE GENERAL CONDITIONS:

The following Holidays have been designated as legal holidays by the City of Deltona: New Year's Day, Martin Luther King Day, Memorial Day, Independence Day, Labor Day, Thanksgiving Day, Friday after Thanksgiving Day, Day of Christmas Eve, and Christmas Day. The City will designate an alternate weekday to celebrate any Holiday falling on a Saturday or Sunday."

END OF SECTION

SECTION 00843

CHANGE ORDER FORM

Project: CITY OF DELTONA
TIPTON DRIVE IMPROVEMENTS

CHANGE ORDER NO._____

DATE OF ISSUANCE: _____

CONTRACTOR:_____

EFFECTIVE DATE:_____

ENGINEER: Tetra Tech

OWNER'S CONTRACT NO.:_____

The following changes are hereby made to the Contract Documents:

CHANGE IN CONTRACT PRICE:	CHANGE IN CONTRACT TIMES:
Original Contract Price $_____	Original Contract Times Substantial Completion:_____ Ready for final payment:_____ days or dates
Net changes from previous Change Orders No.___to No. ___ $_____	Net change from previous Change Orders No. ___ to No. ___ _____ days
Contract Price prior to this Change Order $_____	Contract Times prior to this Change Order Substantial Completion:_____ Ready for final payment:_____ days or dates
Net Increase (decrease) of this Change Order $_____	Net Increase (decrease) of this Change Order _____ days
Contract Price with all approved Change Orders $_____	Contract Times with all approved Change Orders Substantial Completion:_____ Ready for final payment:_____ days or dates

CHANGES ORDERED:

I. GENERAL This change order is necessary to cover changes in the work to be performed under this Contract. The General Conditions, Supplementary Conditions, Specifications and all parts of the Project Manual listed in Article 1, Definitions, of the General Conditions apply to and govern all work under this change order.

Change Order No._____

II. REQUIRED CHANGES: _____

_____

_____

_____

_____

_____

_____

_____

_____

III. JUSTIFICATION: _____

_____

_____

_____

_____

_____

_____

_____

_____

IV. PAYMENT: _____

_____

_____

_____

_____

_____

_____

V. APPROVAL AND CHANGE AUTHORIZATION: _____

_____

_____

_____

_____

_____

_____

_____

Acknowledgments:

The aforementioned change, and work affected thereby, is subject to all provisions of the original contract not specifically changed by this Change Order; and,

It is expressly understood and agreed that the approval of the Change Order shall have no effect on the original contract other than matters expressly provided herein.

Change Order Request by: _____

Change(s) Ordered by: _____

RECOMMENDED BY:

Tetra Tech
(Engineer)

By:_____ _____
(Authorized Signature) (Date)

_____
(Title)

ACCEPTED BY:

_____
(Contractor)

_____ _____
(Authorized Signature) (Date)

_____
(Title)

APPROVED BY:

_____
(Owner)

By:_____ _____
(Authorized Signature) (Date)

END OF SECTION

SECTION 00844

APPLICATION AND CERTIFICATE FOR PAYMENT FORM

Application No._____ Progress_____ Final_____

Engineer's Project No.: _____

Project: CITY OF DELTONA
TIPTON DRIVE IMPROVEMENTS

Contractor:_____ Contract Date:_____

Contract for:_____

Application Date:_____ For Period Ending_____

Change Order Summary			
Change Orders approved in previous months by OWNER TOTAL		ADDITIONS	DEDUCTIONS
Approved this month			
Number	Date Approved		
	TOTALS		
Net Change by Change Orders			

1.	ORIGINAL CONTRACT SUM	$_____
2.	Net Change by Change Order	$_____
3.	CONTRACT SUM TO DATE (Line 1 and 2)	$_____
4.	TOTAL COMPLETED AND STORED TO DATE	$_____
5.	RETAINAGE: (Column I & N, Forms 00845 and 00846)	
	a. _____% of Completed Work	$_____
	b. _____% of Stored Material	$_____
	Total Retainage (Line 5a and 5b)	$_____
6.	TOTAL EARNED LESS RETAINAGE (Line 4 less Line 5 Total)	$_____
7.	LESS PREVIOUS CERTIFICATES FOR PAYMENT (Line 6 from prior Certificate)	$_____
8.	AMOUNT DUE THIS APPLICATION	$_____
9.	BALANCE TO FINISH, PLUS RETAINAGE (Line 3 less Line 6)	$_____

Contractor's Certification

The undersigned Contractor hereby swears under penalty of perjury that (1) all previous progress payments received from the Owner on account of Work performed under the contract referred to above have been applied by the undersigned to discharge in full all obligations of the undersigned incurred in connection with Work covered by prior Applications for Payment numbered 1 through _____ inclusive; and (2) all materials and equipment incorporated in said Project or otherwise listed in or covered by this Application for Payment are free and clear of all liens, claims, security interest and encumbrances; (3) all Work covered by this Application for Payment is in accordance with the Contract Documents and not defective as that term is defined in the Contract Documents.

Dated _____20__

_____
(Contractor)

By:_____
(Name)

_____
(Title)

COUNTY OF_____

STATE OF_____

Before me on this _____ day of _____, 20__, personally appeared _____, known to me, who being duly sworn, deposes and says that (s)he is the _____ of the Contractor above mentioned; that(s) he executed the above Application for Payment and statement on behalf of said Contractor; and that all of the statements contained therein are true, correct and complete.

_____
Notary Public
My Commission Expires_____

Engineer's Recommendation

Payment of the above AMOUNT DUE THIS APPLICATION is recommended.

Tetra Tech

By:_____
(Authorized Signature)

Date:_____

Owner's Approval

By:_____

_____
(Title)

Acct. No._____

Date:_____

END OF SECTION

SECTION 00845
SCHEDULE OF VALUES

Pay Estimate No. ____________________ Project ____

For Period Ending ____________________ Prepared by _______________________________ Page ____ of ____

A	B	C	D	E	F	G		H		I
Item	Description	Bid Quantity	Units	Unit Price	Bid Amount	Complete Through Last Period		Complete Through This Period		Value of Items Completed
						Qty.	%	Qty.	%	
							Subtotals			

SECTION 00846

MATERIALS STORED ON SITE FORM

Pay Estimate No._____	Project_____	Date Prepared_____
For Period Ending_____	Prepared by_____	Page_____of_____

		Value Last Period			(-) Value Mat'l Installed			(+) Value Mat'l Delivered			Value This Period		
A	B	C	D	E	F	G	H	I	J	K	L	M	N
Item	Description	Quantity	Unit Price	Invoice Amount	Quantity	Unit Price	Invoice Amount	Quantity	Unit Price	Invoice Amount	Quantity	Unit Price	Invoice Amount

SECTION 00847

SHOP DRAWING SUBMITTAL FORM

Owner: City of Deltona
255 Enterprise Drive
Deltona, FL 32725

Specification No.: _____
Project: City of Deltona
Tipton Drive Improvements

Contractor: _____

FOR TETRA TECH USE ONLY:

DATE RECEIVED _____
DATE RETURNED _____

Project No.: 200-08534-12007

Owner's Project No.: _____

Contractor's Submittal No.: _____

Contractor's Project No.: _____

Resubmittal Yes ____ No ____

ITEM NO	RESUBMITTAL NO.	NO. COPIES	VENDOR	DESCRIPTION	ENGINEER'S ACTION

ACTION CODE (As defined in the General Conditions)

A	APPROVED
AN	APPROVED AS NOTED
A/R	AMEND AND RESUBMIT
R	NOT APPROVED/REJECTED (DO NOT ORDER OR FABRICATE UNTIL APPROVED)

SUBMITTED BY: _____
Contractor

DATE: _____

ENGINEERS COMMENTS:

_____

_____

_____

Distribution

- Contractor ___ Copies
- Owner ___ Copies
- Tt Office ___ Copies
- Tt Subconsultant ___ Copies
- Tt Field ___ Copies

Discipline Review:

_____
Reviewed By Date

Discipline Review:

_____
Reviewed By Date

_____
Project Manager Date

SECTION 00848

CERTIFICATE OF SUBSTANTIAL COMPLETION

OWNER'S Project No.: _____ ENGlNEER's Project No.: _____

CITY OF DELTONA
TIPTON DRIVE IMPROVEMENTS

CONTRACTOR_____

Contract Date_____

This Certificate of Substantial Completion applies to all Work under the Contract Documents or to the following specified parts thereof.

To_____
Owner

And To_____
Contractor

The Work to which this Certificate applies has been inspected by authorized representatives of OWNER, CONTRACTOR and ENGINEER, and that Work is hereby declared to be substantially complete in accordance with the Contract Documents on

_____
Date of Substantial Completion

A tentative list of items to be completed or corrected is attached hereto. This list may not be all-inclusive, and the failure to include an item therein does not alter the responsibility of CONTRACTOR to complete all the Work in accordance with the Contract documents. When this Certification applies to a specified part of the Work the items in the tentative list shall be completed or corrected by CONTRACTOR within ____ days of the above date of Substantial Completion.

The date of Substantial Completion is the date upon which all guarantees and warranties begin, except as follows:

The responsibilities between OWNER and CONTRACTOR for security, operation, safety, maintenance, heat, utilities and insurance shall be as follows:

RESPONSIBILITIES:

OWNER_____

_____

_____

CONTRACTOR_____

_____

_____

The following documents are attached to and made a part of this Certificate:

This certificate does not constitute an acceptance of Work not in accordance with the Contract Documents nor is it a release of CONTRACTOR'S obligation to complete the Work in accordance with the Contract Documents.

Executed by ENGINEER on _____, 20__.

_____
(Engineer)

By_____

The CONTRACTOR accepts this Certificate of Substantial Completion on:

_____, 20__.

_____
(Contractor)

By_____

END OF SECTION

SECTION 00849

CONTRACTOR'S FINAL RELEASE OF LIEN

Before me the undersigned authority in said County and State, appeared _____ who, being first duly sworn, deposes and says that he is _____ of _____, a company and/or corporation authorized to do business under the laws of Florida, which is the Contractor on the Contract described as: _____ dated the _____ day of _____, 20_____, that the said deponent is duly authorized to make this affidavit by resolution of the Board of Directors of said company and/or corporation; that deponent knows of his own knowledge that said Contract has been complied with in every particular by said Contractor and that all parts of the work have been approved by the Owner's Engineers; that there are no bills remaining unpaid for labor, material, or otherwise, in connection with said Contract and work, and that there are no suits pending against the undersigned as Contractor or anyone in connection with the work done and materials furnished or otherwise under said Contract. Deponent further says that the final estimate which has been submitted to the owner simultaneously with the making of the affidavit constitutes all claims and demands against the Owner on account of said Contract or otherwise, and the acceptance of the sum specified in said final estimate will operate as a full and final release and discharge of the Owner from any further claims, demands or compensation by Contractor under the above Contract. Deponent further agrees that all guarantees under this Contract shall be in full force from the date of this release as spelled out in the Contract Documents.

CONTRACTOR:

By: _____

Title: _____

Sworn to and subscribed to before me this _____ day of _____, 20_____.

_____
Notary Public

My Commission Expires_____

We, the _____ having heretofore executed a Performance Bond for the above-mentioned Contractor covered Project and Section as described above in the sum of_____dollars ($_____), hereby agree that the Owner may make full payment of the final estimate, including the retained percentage, to said Contractor.

It is fully understood that the granting of the right to the Owner to make payment of the final estimate to said Contractor and/or his assigns, shall in no way relieve the surety company of its obligations under its bond, as set forth in the Specifications, Contract and Bond pertaining to the above Project.

IN WITNESS WHEREOF, the _____ has caused this instrument to be executed on its behalf by its _____ and/or its duly authorized attorney in fact, and its corporate seal to be hereunto affixed, all of this _____ day of _____, A.D., 20_____.

_____
Surety Company

_____
Attorney in Fact

(Power of Attorney must be attached if executed by Attorney in Fact)

STATE OF FLORIDA

COUNTY OF _____

Before me the undersigned authority, personally appeared to me well known as the person described in and who executed the foregoing instrument in the name of _____ and/or _____ purpose therein expressed and that he had due and legal authority to execute the same on behalf of said _____, a corporation.

IN WITNESS WHEREOF, I have hereunto set my hand and official seal at _____ this _____ day of _____, 20_____.

_____
Notary Public

END OF SECTION

SECTION 00850

FIELD ORDER

[ ]	OWNER:	City of Deltona	No. Copies	____	
[ ]	ENGINEER:	Tetra Tech	No. Copies	____	
[ ]	ARCHITECT:	_____	No. Copies	____	FIELD ORDER
[ ]	CONTRACTOR:	_____	No. Copies	____	NO. _____
[ ]	FIELD	_____	No. Copies	____	
[ ]	OTHER:	_____	No. Copies	____	

PROJECT DATA		CONTRACT DATA	
NAME:	Tipton Drive Improvements	NUMBER:	_____
LOCATION:	_____	DATE:	_____
OWNER:	City of Deltona	DRAWING NO:	_____
OTHER:	_____	SPECIFICATION SECTION:	_____

To: (Contractor)

_____

_____

_____

_____

_____

You are hereby directed to execute promptly this Field Order which interprets the Contract Documents or orders minor changes in the Work without change in Contract Sum or Contract Time.

If you consider that a change in Contract Sum or Contract Time is required, please submit your itemized proposal to the Engineer immediately and before proceeding with this Work. If your proposal is found to be satisfactory and in proper order, this Field Order will in that event be superseded by a Change Order.

Description (of interpretation or change):_____

_____

_____

_____

_____

_____

Attachments (listing of attached documents that support description):

1. Contractor Request for Information No.:_____
2. _____
3. _____
4. _____
5. _____

TETRA TECH PROJECT NO: 200-08534-12007

BY: _____ DATE: _____

END OF SECTION

SECTION 00851

CONTRACTOR REQUEST FOR INFORMATION

[ ]	OWNER:	City of Deltona	No. Copies	____	
[ ]	ENGINEER:	Tetra Tech	No. Copies	____	CONTRACTOR
[ ]	ARCHITECT:	_____	No. Copies	____	REQUEST FOR
[ ]	CONTRACTOR:	_____	No. Copies	____	INFORMATION
[ ]	FIELD	_____	No. Copies	____	NO._____
[ ]	OTHER:	_____	No. Copies	____	

PROJECT DATA		CONTRACT DATA	
NAME:	Tipton Drive Improvements	NUMBER:	_____
LOCATION:	_____	DATE:	_____
OWNER:	City of Deltona	DRAWING NO:	_____
OTHER:	_____	SPECIFICATION SECTION:	_____

QUESTION:

_____

_____

_____

_____

_____

_____

BY:_____ DATE:_____

REPLY:

_____

_____

_____

_____

_____

BY:_____ DATE:_____

END OF SECTION

SECTION 00853

PRESSURE TEST FORM

[ ]	OWNER:	City of Deltona	No. Copies _____	
[ ]	ENGINEER:	Tetra Tech	No. Copies _____	PRESSURE
[ ]	ARCHITECT:	_____	No. Copies _____	TEST
[ ]	CONTRACTOR:	_____	No. Copies _____	NUMBER_____
[ ]	FIELD:	_____	No. Copies _____	
[ ]	OTHER:	_____	No. Copies _____	

PROJECT DATA:

Name: Tipton Drive Improvements. Owner: City of Deltona

Location: _____ Contractor: _____

Number: _____ Subcontractor: _____

Date: _____

LOCATION OF TEST:
COMPUTATION FOR MEASURED LEAKAGE:

Time-End of Test_____ Pressure-End of Test (psi)_____

Time-Start of Test_____ Pressure-Start of Test (psi)_____

Test Time (Hours)_____ Average Test Pressure (psi)_____

Pipe Material_____

Quantity of Water Required to Return to Original Pressure (gals.) _____

Computation for Allowable Leakage (for Ductile Iron Pipe):

D	=	Size of Line Tested:	Diameter (inches)
S	=	Length of Pipe Tested:	(feet)
T	=	Test Time:	(hours)
P	=	Average Test Pressure:	(psi)

Q = Allowable Leakage: $\frac{S \times D \times (P)^{1/2} \times T}{133{,}200}$ (gal.) Per AWWA Std. C600

Allowable Leakage for PVC pipe shall be 90% of value calculated above.

REMARKS:

THE ABOVE TEST (DOES) (DOES NOT) MEET THE SPECIFICATIONS

TEST WITNESS

by Contractor	by Subcontractor	by Tetra Tech

END OF SECTION

SECTION 00861

WORK DIRECTIVE FORM

[ ]	OWNER:	City of Deltona	No. Copies _____	WORK
[ ]	ENGINEER:	Tetra Tech	No. Copies _____	DIRECTIVE
[ ]	ARCHITECT:	_____	No. Copies _____	NO._____
[ ]	CONTRACTOR:	_____	No. Copies _____	
[ ]	FIELD:	_____	No. Copies _____	
[ ]	OTHER:	_____	No. Copies _____	

PROJECT DATA:		CONTRACT DATA	
NAME:	Tipton Drive Improvements	NUMBER:	_____
LOCATION:	_____	DATE:	_____
OWNER:	City of Deltona	DRAWING NO.:	_____
CONTRACTOR:	_____	SPECIFICATION SECTION:	_____

TO: (Contractor)_____

You are directed to proceed promptly with the following change(s):

Description:

Purpose of Work Directive Change:

If a claim is made that the above changes(s) have affected Contract Price or Contract Time, any claim for a Change Order based thereon will involve one of the following methods of determining the effect of the change(s).

Method of determining change in Contract Price:

[ ] Time and materials
[ ] Unit prices
[ ] Cost plus fixed fee
[ ] Other_____

Method of determining change in Contract Time:

[ ] Contractor's records
[ ] Engineer's records
[ ] Other_____

Estimated increase (decrease) in Contract Price.
$_____
If the change involves an increase, the estimated amount is not to be exceeded without further authorization.

Estimated increase (decrease) in Contract Times.
Substantial Completion _____ days;
Ready for final payment _____ days.
If the change involves an increase, the estimated times are not to be exceeded without further authorization.

RECOMMENDED:

BY:_____
(Engineer)

AUTHORIZED:

BY:_____
(Owner)

Attachments (listing of attached documents that support description):

1. Contractor Request for Information No.:_____

2. Request for Proposal for Proposed Change (RFP) No.:_____

3. _____

4. _____

5. _____

END OF SECTION

SECTION 00863

CHANGE PROPOSAL SUMMARY FORM

[ ]	OWNER:	City of Deltona	No. Copies _____	
[ ]	ENGINEER:	Tetra Tech	No. Copies _____	CHANGE
[ ]	ARCHITECT:	_____	No. Copies _____	PROPOSAL
[ ]	CONTRACTOR:	_____	No. Copies _____	SUMMARY
[ ]	FIELD:	_____	No. Copies _____	NO._____
[ ]	OTHER:	_____	No. Copies _____	

PROJECT DATA:

NAME: Tipton Drive Improvements
LOCATION: _____
OWNER: City of Deltona
CONTRACTOR: _____

CONTRACT DATA

NUMBER: _____
DATE: _____
DRAWING NO.:_____
SPECIFICATION SECTION: _____

REFERENCE: Work Directive No._____ RFP No._____
Field Order No._____ Other _____

DESCRIPTION: _____

PRICING INFORMATION

1.	DIRECT LABOR	Skill/Trade	Manhours	Rate	Cost
	1.A Production Labor	_____	_____	_____	_____
	1.B. Supervision		_____	_____	_____
	[ ] Foreman				
	[ ] Superintendent				
	1.C Field Engineering		_____	_____	_____
	1.D Expenses		_____	_____	_____
					_____
					Subtotal(1)

2. MATERIALS & EQUIPMENT

Description	Quantity	Unit Price	Cost
2.A Incorporated in Work			
_____	_____	_____	_____
_____	_____	_____	_____
_____	_____	_____	_____
_____	_____	_____	_____
2.B Consumed in Performance			
_____	_____	_____	_____
_____	_____	_____	_____
_____	_____	_____	_____
_____	_____	_____	_____
2.D Direct Costs			
_____	_____	_____	_____
_____	_____	_____	_____
_____	_____	_____	_____
_____	_____	_____	_____
2.E Bonds, Insurance			
_____	_____	_____	_____
_____	_____	_____	_____
_____	_____	_____	_____
_____	_____	_____	_____
			_____
			Subtotal(2)

3. TOTAL LABOR, MATERIALS & EQUIPMENT

_____ + _____ = _____

Subtotal (1) Subtotal (2) Total

END OF SECTION

SECTION 00864

REQUEST FOR PROPOSAL FOR PROPOSED CHANGE FORM

[ ]	OWNER:	City of Deltona	No. Copies _____	REQUEST FOR
[ ]	ENGINEER:	Tetra Tech	No. Copies _____	PROPOSAL
[ ]	ARCHITECT:	_____	No. Copies _____	FOR PROPOSED
[ ]	CONTRACTOR:	_____	No. Copies _____	CHANGE (RFP)
[ ]	FIELD:	_____	No. Copies _____	NO._____
[ ]	OTHER:	_____	No. Copies _____	

PROJECT DATA:		CONTRACT DATA	
NAME:	Tipton Drive Improvements	NUMBER:	_____
LOCATION:	_____	DATE:	_____
OWNER:	City of Deltona	DRAWING NO.:	_____
CONTRACTOR:	_____	SPECIFICATION SECTION:	_____

TO: (Contractor)_____

Provide the undersigned a proposal for the following change in the work within seven (7) calendar days after receipt of this request. The written proposal must clearly delineate the scope of the proposed change in work providing an itemized estimate of time and all material and labor (by trade), subcontract and overhead costs and fees. Any amount claimed for subcontracts must be similarly supported.

Description of change in work:

_____
_____
_____
_____
_____
_____
_____
_____
_____
_____

Change Order Type: (Deletion) (Addition) (Revision)

Constraints of Change:_____

Initiated by:_____

Proposal must be received by: _____ (7 days from date below)

Attachments (listing of attached documents that support description):

1. Contractor Request for Information No.:_____
2. _____
3. _____
4. _____
5. _____

TETRA TECH PROJECT NO.:_____

Issued By:_____ DATE:_____

END OF SECTION

DIVISION 1

GENERAL REQUIREMENTS

SECTION 01025

MEASUREMENT AND PAYMENT

PART 1- GENERAL

1.01 DESCRIPTION

A. This section describes the method used to determine quantities of Work performed or materials supplied for which a price is given in the Bid. It establishes the basis upon which payment will be made for Payment Items.

B. Subject to the provisions in General Conditions, all Work and payment for the Work is represented by Payment Items and associated unit prices.

1.02 PAYMENT

A. Subject to all other contract requirements, the Contractor shall be paid for "as-built" quantities of Work for which a price is given in the bid.

B. Quantities on the Bid Form are for comparison in competitive bidding only and do not constitute the basis for payment or measurement of quantities.

C. Quantities on the Bid Form are estimated and may be increased or decreased without limit.

D. No separate payment will be made for one Payment Item as Work incidentally required to complete the Work of another.

E. Payment for Work performed shall be made in accordance with the unit prices in the Bid. Retainage shall apply to all Contractor payments prior to final acceptance.

1.03 MEASUREMENT FOR PAYMENT

A. Payment Limit Lines:

1. Where payment limit lines are shown on the Contract Drawings, measurements of a Payment Item quantity will be made up to, but not beyond such lines.

2. Where the actual Work of a Payment Item falls short of the payment limit line, measurement will be made to the line of the actual Work.

3. No payment will be made for quantities outside of payment limit lines unless authorized in writing by the Owner.

B. Methods of Measurement:

1. Measurements of lengths, widths, slope angles, and depths or elevations shall be made to determine "as-built" quantities of lengths, areas and volumes pertinent to Payment Items.

a. Unless otherwise specified, all lengths shall be horizontal distances.

b. Slope angles and elevations shall be measured using land surveying equipment.

2. Graphic representations of measured quantities shall be drafted to scale using the Drawings where convenient and appropriate. Additional drawings shall be drafted if required.

a. Irregular shapes representing areas and volumes shall be measured using a compensating polar planimeter or a computer digitizer.

b. Regular shapes shall be scaled.

3. Use of Drawings:

a. Unless otherwise agreed upon between the Contractor and Owner, the Drawings shall be used as the basis to establish existing grades and other existing topographic features.

C. Payment limits where Payment Lines are not shown on the Drawings:

1. Pipe Length: Measurement of pipe shall be made along the top of pipe, excluding fittings, valves and manholes, in place, taken as the laying length.

2. Except as specified otherwise, measurements of Payment Item quantities of weights, lengths, areas and volumes shall be made:

a. On "as-built" and in-place completed Work, during construction or at the time of Substantial Completion.

b. If no other feasible and practical methods of measurements are available, by delivery slips delivered to the Engineer.

3. Adjustments shall be made to eliminate overlaps in area and volume measurements.

1.04 PAYMENT ITEMS

A. Separate payment will be made for the Unit Price and Lump Sum items listed on the Bid Form. Related work not specifically listed or identified below in 1.04 B but evidently necessary for satisfactory completion of the Item shall be considered to be included.

B. The following items apply to Bid Form Pay Items:

1. Mobilization and Demobilization: (Bid Item 1)

The lump sum to complete this item shall be full compensation for the preparatory work and operations in mobilizing for beginning Utility work only on the Project including, but not limited to, those operations necessary for the movement of personnel, equipment, supplies and incidentals to the project site, and for the establishment of field office, building, safety equipment and first aid supplies, sanitary and other facilities, as required by these Specifications, and state and local laws and regulations; and any other pre-construction expense necessary for the start of the Work; the cost of field engineering including disposal of cleared and grubbed material and debris, permits and fees, construction schedules, preconstruction video and photographs, field locating all existing utilities, project signs, shop drawings, temporary facilities, laydown storage area, construction aids, erosion control, work associated with contractor support during Owner/Engineer reviews and inspection, re-inspections and any re-work resulting from same, cleaning, project records documents, and operation and maintenance data. The Contractor shall submit invoices substantiating the cost of mobilization and demobilization with each pay request. Ten percent (10%) of the cost for mobilization and demobilization will be withheld until acceptance and final payment.

2. General Requirements, Bonds, and Permits: (Bid Item 2)

The lump sum payment to complete this item shall include all insurance requirement costs, the cost of all bonds, permits, and all administrative costs associated with acquiring and maintaining the necessary coverage as described in the Contract Documents. This item will be paid upon each payment request made by the Contractor. The Contractor shall attach with the pay request invoices to substantiate that the Contractor has obtained appropriate insurance and bonds.

3. Indemnification: (Bid Item 3)

The lump sum payment to complete this item is in consideration of the Contractor's Indemnity Agreement as set out in the Contract Documents, the Owner specifically agrees to give the Contractor $500.00 and other good and valuable consideration, receipt of which is acknowledged upon signing of the Agreement.

4. Testing and Laboratory Services (Roadway Pipe Compaction Allowance): (Bid Item 4)

The lump sum payment to complete this item is in accordance to Section 01410 and as set out in the Contract Documents.

5. Layout and As-Built Survey: (Bid Item 5)

The lump sum payment shall cover all costs to layout all aspects of the proposed improvements. It also includes an overall as-built survey of the completed improvements.

6. Temporary Erosion Protection (Bid Item 6)

The lump sum payment to complete this item is in accordance with Section 01568 and as set out in the Contract Documents.
The contractor shall include all labor, equipment and materials necessary for this item.

7. Maintenance of Traffic (Bid Item 7)

The lump sum payment to complete this item shall include what is required to safely maintain traffic throughout a transportation work zone with minimal inconvenience to the public and fit into one of the following categories:

1) cannot reasonably be quantified;
2) cannot be addressed under current pay items;
3) are incidental to the operations necessary to safely maintain traffic throughout a work zone.

8. Clearing & Grubbing (Bid Item 8)

The lump sum payment to complete this item shall include consists of complete removal and disposal of all vegetation, debris, drainage structures, flexible pavement, buildings or any other obstructions in all areas where excavation is to be done, or where embankments or structures

will be constructed. This includes roadway area, ditch area, borrow and material pits, and areas where culverts or pipe lines will be constructed.

9. Site Grading (Bid Item 9):

The lump sum payment to complete this item shall consist of construction of all finish grade to those demonstrated on the attached plans, also restoration, complete, and all areas stabilized.

10. Remove and Dispose of Existing Drainage Inlet and Existing Drainage Culverts (Bid Item 10 and 11):

The unit price payment to complete this item will be made per unit and per lineal foot and includes all labor, equipment, and materials necessary for the removal of the structures such as ditch bottom inlets, concrete straight endwalls, headwalls, fences, and lineal feet of drainage culvert, etc. as shown on the Drawings and specified herein.

11. Remove & Replace Concrete Drive (Bid Item 12)

a. Measurement of this item will be calculated on the basis of field measures, horizontal dimensions, and design thickness.

b. Payment to complete this item will be made per square yard (SY) and shall include all labor, equipment and materials necessary for the removing, disposing and replacement of existing concrete driveways, concrete pavement, slope pavement, ditch pavement and curb and gutter, where required because of construction operations. Specifically excludes retaining walls and drainage structures. No additional compensation will be allowed for additional concrete required to bring the proposed concrete slab up to finished grade.

12. Remove and Replace Asphalt Pavement (Bid Item 13 and 27)

a. Measurement of this item will be calculated on the basis of field measures, horizontal dimensions, and design thickness.

b. Payment to complete this item will be made per square yard (SY) and shall include all labor, equipment and materials necessary for the removing, disposing, and replacement of existing asphalt pavement, base and subgrade preparation and compaction, and curb and gutter, where required because of construction operations. No additional compensation will be allowed for additional

pavement required to bring the proposed pavement up to finished grade.

13. Furnish and Install 14”x23” Elliptical Reinforced concrete Pipe (Item 14)

    a. Measurement and payment for the pipe will be based on the laying length in linear feet, as measured along the center line of the completed pipe for the size and material installed and includes all labor, equipment, and materials necessary.

    b. Payment shall be at the contract unit price per the item and shall be full compensation for all clearing, grubbing, excavation, de-watering, pipe bedding, backfill and compaction, site restoration, including landscaping and/or sodding, tree trimmings, vegetation removal, silt fencing, tree restoration, removal and replacement of fences, removal and replacement of driveways and roadways disturbed during construction, hiring of power company to hold and support power poles, and for all equipment and all other work necessary to complete the installation as specified. This item shall include all work required to provide temporary service to existing customers during shut downs, and tying into existing lines not specifically identified in this section as required by the Contract Documents. All cost to clean, repair or restrain new or existing piping and appurtenances will be included under the payment for linear foot of pipe.

14. Furnish and Install RCP Gravity Pipes (Bid Items 15, 16, and 17)
    (Sub-items dependent on pipe size and type)

    a. Measurement and payment for the pipe will be based on the laying length in linear feet, as measured along the center line of the completed pipe for the size and material installed and includes all labor, equipment, and materials necessary.

    b. Payment shall be at the contract unit price per the item and shall be full compensation for all clearing, grubbing, excavation, de-watering, pipe bedding, backfill and compaction, site restoration, including landscaping and/or sodding, tree trimmings, vegetation removal, silt fencing, tree restoration, removal and replacement of fences, removal and replacement of driveways and roadways disturbed during construction, hiring of power company to hold and support power poles, and for all equipment and all other work necessary to complete the installation as specified. This item shall include all work required to provide temporary service to existing customers during shut downs, and tying into existing lines not

specifically identified in this section as required by the Contract Documents. All cost to clean, repair or restrain new or existing piping and appurtenances will be included under the payment for linear foot of pipe.

15. FDOT Inlets, Manholes, and Headwalls (Bid Items 18, 19, 20, 21, 22, 23)

The unit price to complete this item will be made per unit and is in accordance with Sections 03100 and 03410, and as set out in the Contract Documents. The contractor shall include all labor, equipment and materials necessary for these items. "Modified" is used when the standard structure on new construction is modified.

16. Furnish and Install Rip Rap (Bid Item 24)

a. Measurement of this item will be calculated based on the actual field measures, horizontal dimensions, and design thickness.

b. The unit price payment to complete this item will be made per square yard (SY) and shall include all labor, equipment and materials necessary for the installation, including but not limited to, the geotextile fabric specified in the drawings, any associated dewatering and necessary permitting, and any other items necessary to complete the item a specified in the plans. No additional compensation will be allowed for additional concrete required to bring the proposed concrete slab up to finished grade.

17. 45° Bend: (Bid Item 25)

a. The number of fittings of the various sizes and types to be paid for will be determined by the actual count of units installed and accepted.

b. Payment for fittings will be made at the Contract unit price per unit for the respective size and type.

18. Furnish and install PVC C900 Pipe: (Bid Items 26)

a. Measurement and payment for the pipe, except as otherwise specified, will be based on the laying length of the pipe in linear feet actually placed as measured along the centerline of the completed pipe, excluding the length of fittings, valves, and specials measured along their centerlines as shown on the Drawings. Branch pipes will be measured along their centerlines from the centerline of the main pipe.

b. Payment for pipe will be made at the Contract unit price per linear foot for the size and type installed, which price and payment shall be full compensation for all clearing, grubbing, maintenance of traffic, excavation, sheeting, shoring, trench box, support of adjacent stormwater and other utilities, dewatering, pipe bedding, backfill and compaction for all pipe and other materials, restrained joints, thrust collars, supports, testing, pipe identification tape, insulated conducting wire, hiring of power company to hold and support power poles, removal and replacement of driveways and roadways disturbed during construction, site restoration, including landscaping and/or sodding, tree trimmings, vegetation removal, silt fencing and for all equipment and all other work necessary to complete the installation as specified. All cost to clean, repair or restrain new or existing piping and appurtenances will be included under the payment for linear feet of pipe.

END OF SECTION

SECTION 01065

PERMITS AND FEES

PART 1 - GENERAL

A. The Contractor shall obtain **all** permits and licenses related to this work, including but not limited to, the necessary construction permits except as otherwise provided herein. The Contractor shall also, if in effect and applicable at the date of bid opening, pay any governmental agency charges and inspection fees required for the prosecution of the work. If the Contractor desires connection of utility services (telephone or electricity) to a field office, he will be responsible for securing the necessary permits and any connection or disconnection charges involved.

B. The Contractor shall adhere to all requirements stated in permits issued for this Project.

C. Included in this section is a copy of the St. Johns River Water Management District (SJRWMD) permit for construction of the proposed improvements.

D. Due to the small size of the project, less than one (1) acre disturbed, an NPDES construction permit is not anticipated to be required. If the project results in one (1) acre or more of disturbance, the Contractor will be responsible for preparing the Stormwater Pollution Prevention Plan, submitting the Notice of Intent (N.O.I.), and complying with all State and Federal regulatory requirements.

END OF SECTION

SECTION 01100

SPECIAL PROJECT PROCEDURES

PART 1 - GENERAL

1.01 PUBLIC NUISANCE

A. The Contractor shall not create a public nuisance including, but not limited to, encroachment on adjacent lands, flooding of adjacent lands, or excessive noise.

B. Sound levels measured by the Engineer shall not exceed 50 dBA from 7 P.M. to 7 A.M. or 60 dBA 7 A.M. to 7 P.M. This sound level shall be measured at the exterior of the nearest exterior wall of the nearest residence. Levels at the equipment shall not exceed 85 dBA at any time. Sound levels in excess of these values are sufficient cause to have the Work halted until equipment can be quieted to these levels. Work stoppage by the Engineer or Owner for excessive noise shall not relieve the Contractor of the other portions of this Specification including, but not limited to, completion dates and bid amounts.

C. No extra charge may be made for time lost due to work stoppage resulting from the creation of a public nuisance.

1.02 ASBESTOS PIPE REMOVAL AND DISPOSAL PROCEDURES

A. General. The Contractor will be responsible for permitting, removal and disposal of asbestos-cement (A-C) pipe segments required to perform the Work as shown on the Drawings. The following paragraphs briefly summarize permitting, field procedures and disposal activities related to the A-C pipe. In these discussions, certain local, state and federal laws have been referenced. The Contractor must comply with all applicable local, state and federal laws/regulations whether or not such laws/regulations are referenced in these specifications.

The Contractor shall provide evidence of experience of proper procedures in removal, handling and disposal of asbestos-cement pipe materials within the past five (5) years. References from at least three completed projects shall be provided at the Preconstruction Conference. If the Contractor proposes to utilize the services of a duly qualified Subcontractor for this portion of the work, these same requirements shall be met.

B. Permitting. The Contractor shall apply for and obtain all permits related to removal of the A-C pipe segments. In accordance with Florida Department of Environmental Protection (FDEP) Rule 62-257.30 1 of the Florida Administrative Code (FAC), the Contractor must submit a “Notice of Asbestos Removal Project”

form with a copy to the Engineer. The Contractor will submit the form to FDEP in a timely manner in accordance with the schedule contained in Rule 62-257. The agencies that may require permits for this project are not necessarily limited to the FDEP.

C. Field Procedures. The Contractor is responsible for all procedures, including safety and health procedures, which will be used when handling A-C pipe segments. The Contractor's handling of A-C pipe segments shall be in conformance with 29 CFR 1926.58 (OSHA Safety and Health Standards).

Cutting of A-C pipe shall be done in conformance with the recommended practices contained in the American Water Works Association's (AWWA) Manual No. M-16. Cutting methods should be used which minimize the production of airborne dust.

D. Preparation of Transport of Materials. The Contractor will remove the pipe sections from the ground in whole pieces without fracturing, breaking or otherwise damaging pipe. The A-C pipe segments shall be carefully loaded onto the transport vehicle without damaging the pipe. The transport vehicle shall totally enclose the A-C pipe segments so that wind and rain cannot disperse dust from the pipe material. Transport of the A-C pipe segments shall also meet the requirements of the waste disposal agency.

E. Waste Disposal. As stated in Rule 62-701.520(3), the FDEP indicates that asbestos containing waste materials can be accepted at a permitted Class I, II or III landfill. The regulations also indicate that the waste generator (the Contractor) shall make arrangements with the landfill operator before disposal of the asbestos containing waste materials and inform the operator of the quantity of the waste and the scheduled date the shipment will arrive at the landfill. The Contractor shall provide the Engineer and the Owner a manifest immediately following disposal.

PART 2 - PRODUCTS (NOT USED)

PART 3 - EXECUTION (NOT USED)

END OF SECTION

SECTION 01340

SHOP DRAWINGS, WORKING DRAWINGS, AND SAMPLES

PART 1 - GENERAL

1.01 DESCRIPTION

A. Scope of Work:

1. The Contractor shall submit to the Engineer for review and approval, such Shop Drawings, Test Reports, and Product Data on materials and equipment (hereinafter in this Section called Data), and material samples (hereinafter in this Section called Samples) as are required for the proper control of work, including but not limited to those Shop Drawings, Data, and Samples for materials and equipment specified elsewhere in the Specifications and in the Drawings.

2. Within fourteen (14) calendar days after the Notice to Proceed, the Contractor shall submit to the Engineer a complete list of preliminary Data on items for which Shop Drawings are to be submitted. Included in this list shall be the names of all proposed manufacturers furnishing specified items. Review of this list by the Engineer shall in no way expressed or implied relieve the Contractor from submitting complete Shop Drawings and providing materials, equipment, etc., fully in accordance with the Contract Documents. This procedure is required in order to expedite final review of Shop Drawings.

3. The Contractor is to maintain an accurate updated submittal log and will bring this log to each scheduled progress meeting with the Owner and the Engineer. This log should include the following items:

a. Submittal description and number assigned.

b. Date to Engineer.

c. Date returned to Contractor (from Engineer).

d. Status of submittal (Approved, Approved as Noted, Amend and Resubmit, and Rejected).

e. Date of resubmittal and return (as applicable).

f. Date material release (for fabrication).

g. Projected date of fabrication.

h. Projected date of delivery to site.

i. Status of O&M manuals submittal.

j. Specification Section.

k. Drawings sheet number.

B. Related Requirements Described Elsewhere:

1.02 CONTRACTOR'S RESPONSIBILITY

A. It is the responsibility of the Contractor to check all drawings, data and samples prepared before submitting them to the Engineer for review. Each and every copy of the Drawings and data shall bear the Contractor's stamp showing that they have been so checked. Shop drawings submitted to the Engineer without the Contractor's stamp will be returned to the Contractor for conformance with this requirement. Shop drawings shall indicate any deviations in the submittal from requirements of the Contract Documents. If the Contractor takes exception to the specifications, the Contractor shall note the exception in the letter of transmittal to the Engineer.

B. Determine and verify:

1. Field measurements.

2. Field construction criteria

3. Catalog numbers and similar data.

4. Conformance with Specifications.

C. The Contractor shall furnish the Engineer a schedule of Shop Drawing submittals fixing the respective dates for the submission of shop and working drawings, the beginning and ending of manufacture, testing, and installation of materials, supplies, and equipment. This schedule shall indicate those that are critical to the progress schedule.

D. The Contractor shall not begin any of the work covered by a Shop Drawing, Data, or a Sample returned for correction until a revision or correction thereof has been reviewed and returned to him, by the Engineer, with approval.

E. The Contractor shall submit to the Engineer all drawings and schedules sufficiently in advance of construction requirements to provide no less than thirty (30) calendar days for checking and appropriate action from the time the Engineer receives them.

F. All submittals shall be accompanied with a transmittal letter prepared in duplicate containing the following information:

1. Date.

2. Project Title and Number.

3. Contractor's name and address.

4. The number of each Shop Drawings, Project Data, and Sample submitted.

5. Notification of Deviations from Contract Documents.

a. The Contractor shall indicate in **bold type** at the top of the cover sheet of submittal of shop drawing if there is a deviation from the Drawings, Specifications, or referenced specifications or codes.

b. The Contractor shall also list any deviations from the Drawings, Specifications, or referenced specifications or codes and identify in green ink prominently on the applicable Shop Drawings.

6. Submittal Log Number conforming to Specification Section Number.

G. The Contractor shall submit seven (7) copies of descriptive or product data information and Shop Drawings to the Engineer plus the number of copies which the Contractor requires returned. All blueprint Shop Drawings shall be submitted with one (l) set of mylar reproducibles and the same number of prints as Shop Drawings, plus the number of copies which the Contractor requires returned. The Engineer will review the blueprints and return to the Contractor the set of marked-up mylar reproducibles with appropriate review comments.

H. The Contractor shall be responsible for and bear all costs of damages which may result from the ordering of any material or from proceeding with any part of Work prior to the completion of the review by the Engineer of the necessary Shop Drawings.

I. The Contractor shall be fully responsible for observing the need for and making any changes in the arrangement of piping, connections, wiring, manner of installation, etc., which may be required by the materials/equipment he proposes

to supply both as pertains to his own work and any work affected under other parts, headings, or divisions of the Drawings and Specifications.

J. The Contractor shall not use Shop Drawings as a means of proposing alternate items to demonstrate compliance with the Drawings and Specifications.

K. Each submittal will bear a stamp indicating that Contractor has satisfied Contractor's obligations under the Contract Documents with respect to Contractor's review and approval of that submittal as illustrated below.

(OWNER'S NAME)
(PROJECT NAME)
(PROJECT NUMBER)

SHOP DRAWING NO.:_____

SPECIFICATION SECTION:_____ DRAWING NO._____

WITH RESPECT TO THIS SHOP DRAWING OR SAMPLE, I HAVE DETERMINED AND VERIFIED ALL QUANTITIES, DIMENSIONS, SPECIFIED PERFORMANCE CRITERIA, INSTALLATION REQUIREMENTS, MATERIALS, CATALOG NUMBERS, AND SIMILAR DATA WITH RESPECT THERETO AND REVIEWED OR COORDINATED THIS SHOP DRAWING OR SAMPLE WITH OTHER SHOP DRAWINGS AND SAMPLES AND WITH THE REQUIREMENTS OF THE WORK AND THE CONTRACT DOCUMENTS.

_____ NO VARIATION FROM CONTRACT DOCUMENTS

_____ VARIATION FROM CONTRACT DOCUMENTS AS SHOWN

(CONTRACTOR'S NAME)
(CONTRACTOR'S ADDRESS)

BY: _____DATE:_____
AUTHORIZED SIGNATURE

L. Drawings and schedules shall be checked and coordinated with the work of all trades and sub-contractors involved, before they are submitted for review by the Engineer and shall bear the Contractor's stamp of approval as evidence of such checking and coordination. Drawings or schedules submitted without this stamp of approval shall be returned to the Contractor for resubmission.

1.03 ENGINEER'S REVIEW OF SHOP DRAWINGS

A. The Engineer's review of Shop Drawings, Data, and Samples as submitted by the Contractor will be to determine if the items(s) generally conforms to the information in the Contract Documents and is compatible with the design concept. The Engineer's review and exceptions, if any, will not constitute an approval of dimensions, connections, quantities, and details of the material, equipment, device, or item shown.

B. The review of drawings and schedules will be general, and shall not be construed:

1. As permitting any departure from the Contract Documents.

2. As relieving the Contractor of responsibility for any errors, including details, dimensions, and materials.

3. As approving departures from details furnished by the Engineer, except as otherwise provided herein.

C. If the drawings or schedules as submitted describe variations and show a departure from the Contract Documents which the Engineer finds to be in the interest of the Owner and to be so minor as not to involve a change in Contract Price or contract time, the Engineer may return the reviewed drawings without noting an exception.

D. "Approved As Noted" - Contractor shall incorporate Engineer's comments into the submittal before release to manufacturer. The Contractor shall send a letter to the Engineer acknowledging the comments and their incorporation into the Shop Drawing.

E. "Amend And Resubmit" - Contractor shall resubmit the Shop Drawing to the Engineer. The resubmittal shall incorporate the Engineer's comments highlighted on the Shop Drawing.

F. "Rejected" - Contractor shall correct, revise and resubmit Shop Drawing for review by Engineer.

G. Resubmittals will be handled in the same manner as first submittals. On resubmittals the Contractor shall direct specific attention, in writing or on resubmitted Shop Drawings, to revisions other than the corrections requested by the Engineer on previous submissions. The Contractor shall make any corrections required by the Engineer.

H. If the Contractor considers any correction indicated on the drawings to constitute a change to the Drawings or Specifications, the Contractor shall give written notice thereof to the Engineer.

I. When the Shop Drawings have been completed to the satisfaction of the Engineer, the Contractor shall carry out the construction in accordance therewith and shall make no further changes therein except upon written instructions from the Engineer.

J. No partial submittals will be reviewed. Submittals not deemed complete will be stamped "Rejected" and returned to the Contractor for resubmittal. Unless otherwise specifically permitted by the Engineer, make all submittals in groups containing all associated items for:

1. Systems.

2. Processes.

3. As indicated in specific Specifications Sections.

All drawings, schematics, manufacturer's product Data, certifications, and other Shop Drawing submittals required by a system specification shall be submitted at one time as a package to facilitate interface review.

K. Only the Engineer shall utilize the color "red" in marking Shop Drawing submittals.

L. Shop drawing and submittal data shall be reviewed by the Engineer for each original submittal and first resubmittal; thereafter review time for subsequent resubmittals shall be charged to the Contractor and the Contractor shall reimburse the Owner for services rendered by the Engineer as specified in the Supplementary Conditions.

1.04 SHOP DRAWINGS

A. When used in the Contract Documents, the term "Shop Drawing" shall be considered to mean Contractor's plans for materials and equipment which become an integral part of the Project. Shop Drawings shall be complete and detailed and shall consist of fabrication, erection, setting and schedule drawings, manufacturer's scale drawings, and wiring and control diagrams. Catalogs cuts, catalogs, pamphlets, descriptive literature, and performance and test data shall be considered only as supportive information to required Shop Drawings as defined above. As used herein, the term "manufactured" applies to standard units usually mass-produced; and "fabricated" means items specifically assembled or made out of selected materials to meet individual design requirements.

B. Manufacturer's catalog sheets, brochures, diagrams, illustrations, and other standard descriptive data shall be clearly marked to identify pertinent materials, products, or models. Delete information which is not applicable to the Work by striking or cross-hatching.

C. Each Shop Drawing shall be submitted with an 8-1/2" by 11" cover sheet which shall include a title block for the submittal. Each Shop Drawing cover sheet shall

have a blank area 3-1/2 inches high by 4-1/2 inches wide, located adjacent to the title block. The title block/cover sheet shall display the following:

1. Project Title and Number.

2. Name of project building or structure.

3. Number and title of the Shop Drawing.

4. Date of Shop Drawing or revision.

5. Name of Contractor and subcontractor submitting drawing.

6. Supplier/manufacturer.

7. Separate detailer when pertinent.

8. Specification title and Section number.

9. Applicable Drawing number.

D. Data on materials and equipment shall include, without limitation, materials and equipment lists, catalog data sheets, catalog cuts, performance curves, diagrams, verification of conformance with applicable standards or codes, materials of construction, and similar descriptive material. Materials and equipment lists shall give, for each item thereon, the name and location of the supplier or manufacturer, trade name, catalog reference, size, finish, and all other pertinent Data.

E. For all mechanical and electrical equipment furnished, the Contractor shall provide a list including the equipment name, and address, and telephone number of the manufacturer's representative and service company so that service and/or spare parts can be readily obtained.

F. If drawings show variations from Contract requirements because of standard shop practice or for other reasons, the Contractor shall describe such variations in his letter of transmittal. If acceptable, proper adjustment in the Contract shall be implemented where appropriate. If the Contractor fails to describe such variations, he shall not be relieved of the responsibility for executing the Work in accordance with the Contract, even though such drawings have been reviewed.

G. All manufacturers or equipment suppliers who propose to furnish equipment or products shall submit an installation list to the Engineer along with the required shop drawings. The installation list shall include at least five (5) installations where identical equipment has been installed and has been in operation for a

period of at least two (2) years unless specified otherwise in the Specification Section applicable.

1.05 WORKING DRAWINGS

A. When used in the Contract Documents, the term "Working Drawings" shall be considered to mean the Contractor's plan for temporary structures such as temporary bulkheads, support of open cut excavation, support of utilities, ground water control systems, forming and falsework for underpinning, and for such other work as may be required for construction but does not become an integral part of the Project.

B. Copies of working drawings as noted in paragraph 1.05 A. above, shall be submitted to the Engineer where required by the Contract Documents or requested by the Engineer, and shall be submitted at least thirty (30) calendar days (unless otherwise specified by the Engineer) in advance of their being required for the Work.

C. Working Drawings shall be signed by a registered Professional Engineer, currently licensed to practice in the State of Florida, and shall convey, or be accompanied by, calculation or other sufficient information to completely explain the structure, machine, or system described and its intended manner of use. Prior to commencing such work, working drawings must have been reviewed without specific exceptions by the Engineer, which review will be for general conformance and will not relieve the Contractor in any way from his responsibility with regard to the fulfillment of the terms of the Contract. All risks to new or existing work are assumed by the Contractor; the Owner and Engineer shall have no responsibility therefor.

1.06 SAMPLES

A. The Contractor shall furnish, for the approval of the Engineer, samples required by the Contract Documents or requested by the Engineer. Samples shall be delivered to the Engineer as specified or directed. The Contractor shall prepay all shipping charges on samples. Materials or equipment for which samples are required shall not be used in the Work until approved by the Engineer.

B. Samples shall be of sufficient size and quantity to clearly illustrate:

1. Functional characteristics of the product, with integrally related parts and attachment devices.

2. Full range of color, texture, and pattern.

3. A minimum of three (3) samples of each item shall be submitted.

C. Each sample shall have a label indicating:

1. Name of Project.

2. Name of Contractor and subcontractor.

3. Material or equipment represented.

4. Place of origin.

5. Name of producer/supplier and brand (if any).

6. Location in Project.

7. Submittal and specification numbers.

(Samples of finished materials shall have additional marking that will identify them under the finished schedules.)

D. The Contractor shall prepare a transmittal letter and a description sheet for each shipment of samples. The description sheet shall contain the information required in Paragraphs 1.06B and C above. He shall enclose a copy of the letter and description sheet with the shipment and send a copy of the letter and description sheet to the Engineer. Approval of a sample shall be only for the characteristics or use named in such approval and shall not be construed to change or modify any Contract requirements.

E. Approved samples not destroyed in testing shall be sent to the Engineer or stored at the site of the Work. Approved Samples of the hardware in good condition will be marked for identification and may be used in the Work. Materials and equipment incorporated in the Work shall match the approved Samples. Samples which failed testing or were not approved will be returned to the Contractor at his expense, if so requested at time of submission.

PART 2 - PRODUCTS (NOT USED)

PART 3 - EXECUTION (NOT USED)

END OF SECTION

SECTION 01410

TESTING AND TESTING LABORATORY SERVICES

PART 1 - GENERAL

1.01 DESCRIPTION

A. Scope of Work:

1. The Contractor shall employ and pay for services of an independent testing laboratory to perform soils and concrete testing. The testing laboratory will be selected by the Engineer and shall complete various testing activities as directed by the Engineer; however, the Contractor shall pay for the testing services from an allowance established by the Owner. For this project, the allowance is as listed in the Bid Response Form, Section 00300.

2. Contractor shall cooperate with the laboratory to facilitate the execution of its required services.

B. Related Requirements Described Elsewhere:

1. Conditions of the Contract.

2. Respective section of the Specifications: Certification of products.

3. Each Specification section listed: Laboratory tests required, and standards for testing.

4. Testing laboratory inspection, sampling and testing is required for, but not limited to the following:

a. Excavating, Backfilling, and Compaction.

b. Stabilized Sub-Base.

c. Limerock Base.

d. Asphaltic Concrete Pavement.

e. Cast-in-Place Concrete.

C. The following schedule defines the responsibilities of various tests.

Test	Notes	Paid for By
Soil Compaction	Pipe Work: every 300 ft. at each lift of compaction minimum. Beneath Structures: each 500 SF each lift of compaction minimum.	Contractor
Settlement Monitoring	As required by testing laboratory	Contractor
LBR	Each 600 SF of pavement minimum.	Contractor
Asphaltic Concrete Pavement	Per FDOT Specifications	Contractor
Concrete	Slump test each delivery and compression test five cylinders every 50 C.Y. minimum.	Contractor

D. Additional Tests: The Owner shall pay for first tests as specified herein. In the event that first test samples do not meet the applicable material specifications, the Contractor shall take measures to conform the material and equipment to the Specifications. All subsequent tests after the first test required to show compliance with the Specifications shall be paid for by the Contractor.

1.02 CONTRACTOR'S RESPONSIBILITIES

A. Cooperate with Owner's personnel and laboratory personnel. Provide access to Work and manufacturer's operations.

B. Provide to the laboratory the preliminary design mix proposed to be used for concrete, and other materials mixes which require control by the testing laboratory.

C. Materials and equipment used in the performance of work under this Contract are subject to inspection and testing at the point of manufacturer or fabrication. Standard specifications for quality and workmanship are indicated in the Contract Documents. The Engineer may require the Contractor to provide statements or certificates from the manufacturers and fabricators that the materials and equipment provided by them are manufactured or fabricated in full accordance with the standard specifications for quality and workmanship indicated in the Contract Documents. All costs of providing statements and certificates shall be a subsidiary obligation of the Contractor, and no extra charge to the Owner shall be allowed on account of such testing and certification.

D. Furnish incidental labor and facilities:

1. To provide access to Work to be tested.

2. To facilitate inspections and tests.

E. Notify Owner a minimum of one (1) working day in advance of operations to allow for laboratory assignment of personnel and scheduling of tests.

PART 2 - PRODUCTS (NOT USED)

PART 3 - EXECUTION (NOT USED)

END OF SECTION

SECTION 01568

TEMPORARY EROSION AND SEDIMENTATION CONTROL

PART 1 - GENERAL

1.01 DESCRIPTION

A. Scope of Work:

1. The Work specified in this Section consists of designing, providing, maintaining and removing temporary erosion and sedimentation controls as required by Rules and Regulations and Permit conditions.

2. Temporary erosion controls include, but are not limited to, grassing, mulching, setting, watering and reseeding on-site surfaces and soil and borrow area surfaces and providing interceptor ditches at ends of berms and at those locations which will ensure that erosion during construction will be either eliminated or maintained within acceptable limits as established by the Owner.

3. Temporary sedimentation controls include, but are not limited to, silt dams, traps, barriers, and appurtenances at the foot of sloped surfaces which will ensure that sedimentation pollution will be either eliminated or maintained within acceptable limits as established by the Owner.

4. Contractor is responsible for providing effective temporary erosion and sediment control measures during construction or until final controls become effective.

B. Related Work Described Elsewhere:

1. Trench, Backfilling, and Compaction: Section 02221.

2. Seeding and Mulching: Section 02922.

3. Solid Sodding: Section 02934

PART 2 - PRODUCTS

2.01 EROSION CONTROL

A. Sodding is specified in Section 02934.

B. Netting shall be fabricated of material acceptable to the Owner.

2.02 SEDIMENTATION CONTROL

A. Bales shall be clean, seed-free cereal hay type.

B. Netting shall be fabricated of material acceptable to the Owner.

C. Filter stone shall be crushed stone which conforms to Florida Department of Transportation (FDOT) specifications.

D. Concrete block shall be hollow, non-load bearing type.

E. Concrete shall be exterior grade not less than 1-inch thick.

PART 3 - EXECUTION

3.01 EROSION CONTROL

A. Minimum procedures for grassing are:

1. Scarify slopes to a depth of not less than 6 inches and remove large clods, rock, stumps, roots larger than 1/2 inch in diameter and debris.

2. Sow seed within 24 hours after the ground is scarified with either mechanical seed drills or rotary hand seeders.

3. Apply mulch loosely and to a thickness of between 3/4 inch and 1-1/2 inches.

4. Apply netting over mulched areas on sloped surfaces.

5. Roll and water seeded areas in a manner which will encourage sprouting of seeds and growing of grass. Reseed areas which exhibit unsatisfactory growth. Backfill and seed eroded areas.

3.02 SEDIMENTATION CONTROL

A. Install and maintain silt dams, traps, barriers, and appurtenances as shown on the approved descriptions and working drawings. Hay bales which deteriorate and filter stone which is dislodged shall be replaced.

3.03 PERFORMANCE

A. Should any of the temporary erosion and sediment control measures employed by the Contractor fail to produce results which comply with the requirements of the State of Florida, the Owner or Engineer, the Contractor shall immediately take whatever steps are necessary to correct the deficiency at his own expense.

END OF SECTION

SECTION 01720

PROJECT RECORD DOCUMENTS

PART 1 - GENERAL

1.01 DESCRIPTION

A. Scope of Work: Maintain at the site for the Owner one (l) record copy of:

1. Drawings.

2. Specifications.

3. Addenda.

4. Change Orders and other modifications of the Contract.

5. Engineer's Field Orders or written instructions.

6. Approved Shop Drawings, Working Drawings and Samples.

7. Field test records.

8. Construction photographs.

B. Related Requirements Described Elsewhere:

1. Shop Drawings, Working Drawings and Samples: Section 01340.

1.02 MAINTENANCE OF DOCUMENTS AND SAMPLES

A. Store documents and samples in Contractor's field office apart from documents used for construction.

1. Provide files and racks for storage of documents.

2. Provide locked cabinet or secure storage space for storage of samples.

B. File documents and samples in accordance with CSI format with section numbers as provided herein.

C. Maintain documents in a clean, dry, legible, condition and in good order. Do not use record documents for construction purposes.

D. Make documents and samples available at all times for inspection by the Engineer or the Owner.

E. As a prerequisite for monthly Progress payments, the Contractor is to exhibit the currently updated "Record Documents" for review by the Engineer and Owner. Payment may be withheld if record documents are not satisfactorily maintained.

1.03 MARKING DEVICES

A. Provide felt tip marking pens for recording information in the color code designated by the Engineer.

1.04 RECORDING

A. Label each document "PROJECT RECORD" with a rubber stamp having one (1) inch high letters.

B. Record information concurrently with construction progress.

1. Do not conceal any work until required information is recorded.

C. Drawings: Legibly and clearly mark, to scale, each drawing to record actual construction:

1. Depths of various elements of foundation in relation to finish first floor datum.

2. All underground piping with elevations and dimensions. Changes to piping location. Horizontal and vertical locations of underground utilities and appurtenances, referenced to permanent surface improvements. Actual installed pipe material, class, etc.; structure top elevations; roadway cross sections every 50 feet including centerline of pavement; edge of pavement; edge of shoulder; centerline of swales; grades at right-of-way; driveway flow line elevations.

3. Location of internal utilities and appurtenances concealed in the construction, referenced to visible and accessible features of the structure.

4. Field changes of dimension and detail.

5. Changes made by Field Order or by Change Order.

6. Details not on original Contract Drawings.

7. Equipment and piping relocations.

D. Specifications and Addenda: Legibly mark each section to record:

1. Manufacturer, trade name, catalog number of Supplier of each product and item of equipment actually installed.

2. Changes made by Field Order or by Change Order.

E. Shop Drawings (after final review and approval): Provide six (6) sets of record shop drawings along with a CD with drawings in AutoCAD and PDF or DWF format within the Operation and Maintenance Manual, for each process equipment, piping, electrical system and instrumentation system.

1.05 SUBMITTALS

A. At Contract closeout, deliver Record Documents to the Engineer for the Owner.

B. Accompany submittal with transmittal letter in duplicate, containing:

1. Date.

2. Project title and number.

3. Contractor's name and address.

4. Title and number of each Record Document.

5. Signature of Contractor or his authorized representative.

C. At Clearance submittals (partial and/or complete), deliver Record Documents to the Engineer for the Owner. Submittal shall include a CD with drawings in AutoCAD format and PDF or DWF, a minimum of four (4) sets of hardcopy drawings along with pressure test forms and bacteriological test reports, if applicable.

PART 2 - PRODUCTS (NOT USED)

PART 3 - EXECUTION (NOT USED

END OF SECTION

DIVISION 2

SITEWORK

SECTION 02080

ABANDONMENT, REMOVAL AND DISPOSAL OF EXISTING PIPE REMOVED FROM SERVICE

PART 1 - GENERAL

1.01 DESCRIPTION

A. Scope of Work: Furnish all labor, materials, equipment and incidentals required to abandon, remove, salvage and/or dispose of existing pipelines as shown on the Drawings and as specified herein.

1.02 QUALITY ASSURANCE

A. Permits and Licenses: Contractor shall obtain and pay respective fees for all necessary permits and licenses for performing the Work and shall furnish a copy of same to the Engineer prior to commencing the Work. The Contractor shall comply with the requirements of the permits.

B. Notices: Contractor shall issue written notices of planned work to companies or local authorities owning utility conduit, wires or pipes running to or through the project site. Copies of said notices shall be submitted to the Engineer.

C. Standards:

1. National Emission Standards Hazardous Air Pollution (NESHAP), 40 CFR Part 61, Subpart M, latest revision.
2. Occupational Safety and Health Act, 29 CFR
3. The Environmental Protection Agency (EPA) Asbestos Abatement Worker Protection Rule.
4. Florida Statute 455.300.

D. Quality Control

1. It shall be the responsibility of the Contractor to provide supervision and inspections to ensure that the existing piping is removed and disposed, salvaged or abandoned as designated in the Drawings and as specified herein.

1.03 SUBMITTALS

A. Shop Drawings

1. Shop drawings shall be submitted to the Engineers acceptance prior to construction in accordance with Division 1 for the following:

a. Grout
b. Caps and plugs

PART 2 - MATERIALS (Not Used)

PART 3 - EXECUTION

3.01 REMOVAL, ABANDONMENT AND DISPOSAL

A. General: Existing piping designated on the Drawings to be removed shall be exposed and removed by the Contractor in accordance with the requirements specified herein.

B. Types of pipe to be removed:

1. Ductile Iron Water Main and Force Main
2. PVC Water Main and Force Main

C. Removal and Disposal:

1. Pipe designated to be removed and disposed by the Contractor shall be completely drained and the contents properly disposed. The pipe shall then be completely removed from the site, including fittings, valves other in-line devices.

D. Removal of material to be salvaged:

1. Pipe designated on the Drawings to be removed and salvaged shall be completely drained and the contents properly disposed. The pipe shall then be thoroughly pressure washed, palletized on wooden skids to a dimension not exceeding the recommendation of the manufacturer, and conveyed to the Owner at the location designated by the Owner.

E. Abandonment:

1. All pipe designated to be abandoned on this project shall be left in place and filled with grout in accordance with Section 03600, "Grouting" as shown on the Drawings.

2. Plugs: Pipe to be grouted shall be capped or plugged with a fitting. All caps and plugs shall be submitted to the Engineer for approval.

END OF SECTION

SECTION 02100

SITE PREPARATION

PART 1 - GENERAL

1.01 DESCRIPTION

A. Scope of Work

1. This Section covers clearing, grubbing, and stripping along the construction sites, complete as specified herein.

2. The Contractor shall clear and grub all of the area within the limits of construction or as required, which includes but is not limited to, utility easements. The width of the area to be cleared shall be established by the Engineer prior to the beginning of any clearing.

PART 2 - EXECUTION

2.01 CLEARING

A. The surface of the ground, for the area to be cleared and grubbed, shall be completely cleared of all timber, brush, stumps, roots, grass, weeds, rubbish, and all other objectionable obstructions resting on or protruding through the surface of the ground. However, trees designated by the Engineer shall be preserved as hereinafter specified. Clearing operations shall be conducted so as to prevent damage to existing structures and installations, and to those under construction, and so as to provide for the safety of employees and others. Clearing for structures shall consist of topsoil and vegetation removal.

2.02 GRUBBING

A. Grubbing shall consist of the complete removal of all stumps, roots larger than 1-1/2 inches in diameter, matted roots, brush, timber, logs, and any other organic or metallic debris not suitable for foundation purposes, resting on, under, or protruding through the surface of the ground to a depth of 18 inches below the subgrade. All depressions excavated below the original ground surface for or by the removal of such objects shall be refilled with suitable materials and compacted to a density conforming to the surrounding ground surface.

2.03 STRIPPING

A. In areas so designated, topsoil shall be stockpiled. Topsoil so stockpiled shall be protected until it is placed as specified. Any topsoil remaining after all Work is in place shall be disposed of by the Contractor.

2.04 DISPOSAL OF CLEARED AND GRUBBED MATERIAL

A. The Contractor shall dispose of all material and debris from the clearing and grubbing operation by hauling such material and debris away to an approved disposal site. Disposal by burning or burial will not be permitted. The cost of disposal (including hauling) of cleared and grubbed material and debris shall be considered a subsidiary obligation of the Contractor, the cost of which shall be included in the Contract Price.

2.05 PRESERVATION OF TREES

A. Those trees which are designated for preservation shall be carefully protected from damage. The Contractor shall erect such barricades, guards, and enclosures as may be considered necessary for the protection of the trees during all construction operations.

2.06 PRESERVATION OF DEVELOPED PRIVATE PROPERTY

A. The Contractor shall exercise extreme care to avoid unnecessary disturbance of developed private property. Trees, shrubbery, gardens, lawn, and other landscaping, which in the opinion of the Engineer must be removed, shall be replaced and replanted to restore the construction easement to the condition existing prior to construction. It is the responsibility of the Contractor to document the condition existing prior to construction.

B. All soil preparation procedures and replanting operations shall be under the supervision of a nurseryman experienced in such operations.

C. Improvements to the land such as fences, walls, outbuildings, etc., which of necessity must be removed, shall be replaced with equal quality materials and Workmanship.

D. The Contractor shall clean up the construction site across from developed private property directly after construction is completed upon approval of the Engineer.

2.07 PRESERVATION OF PUBLIC PROPERTY

A. The appropriate paragraphs of Articles 2.01 and 2.02 of these Specifications shall apply to the preservation and restoration of all damaged areas of public lands, parks, rights-of-way, easements, etc.

END OF SECTION

SECTION 02140

DEWATERING

PART 1 - GENERAL

1.01 DESCRIPTION

A. Scope of Work: The work to be performed under this Section shall include the design and installation of a temporary wellpoint system until completion of construction to dewater subsurface waters from structures, or along pipe routes, as required.

B. Related Work Described Elsewhere:

1. Shop Drawings, Working Drawings, and Samples: Section 01340.

2. Trenching, Backfilling, and Compaction: Section 02221.

1.02 QUALITY ASSURANCE

A. Qualifications: The Contractor shall engage a Geotechnical Engineer registered in the State of Florida to design the temporary dewatering system. The temporary dewatering system shall be designed by a firm who regularly engages in the design of dewatering systems and who is fully experienced, reputable and qualified in the design of such dewatering systems. The firm shall have a successful record of operation for a minimum of five (5) years prior to bid date.

B. In lieu of experience, the dewatering firm shall provide a performance and warranty bond for 1.5 times the total installed cost of the temporary dewatering system. This bond shall be executed prior to award and/or contract execution.

C. Standards: The dewatering of any excavation areas and the disposal of water during construction shall be in strict accordance with all local and State government rules and regulations.

1.03 SUBMITTALS

A. Materials and Shop Drawings: Shop drawings required to establish compliance with the Specifications shall be submitted in accordance with the provisions of Section 01340: Shop Drawings, Working Drawings, and Samples. Submittals shall include at minimum the following:

1. Design notes and drawings.

2. Descriptive literature of the temporary dewatering system.

3. Layout of all piping involved.

4. Bill of materials.

1.04 CRITERIA

A. The wellpoint system shall be developed to the point that is capable of dewatering such that groundwater levels are maintained at least three (3) feet below the bottom of excavations. Each wellpoint system shall be capable of dewatering and maintaining groundwater levels at the respective structures. Observation wells shall be constructed for the purpose of testing each system.

PART 2 - PRODUCTS

2.01 GENERAL

A. The equipment specified herein shall be standard dewatering equipment of proven ability as designed and manufactured by firms having experience in the design and production of such equipment. The equipment furnished shall be designed, constructed and installed in accordance with the best practices and methods.

B. The Contractor shall be required to monitor the performance of the dewatering system during the progress of the work and require such modifications as may be required to assure that the systems will perform satisfactorily. Dewatering systems shall be designed in such a manner as to preserve the undisturbed bearing capacity of the subgrade soils and to preserve the integrity of adjacent structures.

PART 3 - EXECUTION

3.01 INSTALLATION

A. Dewatering: The Contractor shall install a temporary wellpoint dewatering system for the removal of subsurface water encountered during construction of the proposed structures.

3.02 PROTECTION AND SITE CLEAN-UP

A. At all times during the progress of the Work the Contractor shall use all reasonable precautions to prevent either tampering with the wellpoints or the entrance of foreign material.

B. After the wellpoint system is no longer needed, the Contractor shall remove all of his equipment, materials, and supplies from the site of the work, remove all surplus materials and debris, fill in all holes or excavations, and grade the site to elevations of the surface levels which existed before work started. The site shall be thoroughly cleaned and approved by the Engineer.

END OF SECTION

SECTION 02221

TRENCHING, BACKFILLING AND COMPACTING

PART 1 - GENERAL

1.01 DESCRIPTION

A. Scope of Work:

1. Excavation, bedding, backfill and compaction for construction of utilities and utility structures, including but not limited to, piping and appurtenances, pump stations, vaults, manholes, drainage pipes and structures.

2. Disposal of excavated materials, including salvage of material and removal of excess, or material not suitable for reuse.

3. Maintenance of excavations including sheeting, bridging and fencing.

4. Construction of concrete cradles, encasement, bedding and saddles.

5. Excavation and backfill of test pits.

6. Protection of utilities.

B. Related Work Specified Elsewhere:

1. Dewatering: Section 02140.

1.02 QUALITY ASSURANCE

A. Requirements of Regulatory Agencies:

1. Comply with rules, regulations and laws concerning construction activity in roads and rights-of-way of the applicable jurisdiction.

2. Comply with Federal Department of Labor, OSHA Standard, Title 29.

B. Qualification of Testing Agency:

Use only recognized commercial soils testing laboratory with not less than five (5) years experience in conducting tests and evaluations of soils and materials.

1. Provide soils testing and inspection service acceptable to Engineer. Include sampling and testing of materials proposed for incorporation into the Work.

2. Owner will perform material testing and compaction monitoring for quality control during construction operations at the site.

C. Soil Tests:

1. The Contractor will provide soil testing by an independent laboratory which will make tests in locations averaging 300 feet apart on each lift.

2. Engineer may designate other locations for additional tests.

3. If any tests are unsatisfactory, re-excavate and recompact the same or different material until the specified densities are obtained.

D. Reference Standards:

1. Florida Department of Transportation Standard Specifications for Road and Bridge Construction, latest edition (FDOT Specifications).

1.03 SUBMITTALS

A. Materials and Shop Drawings:

1. Prior to start of Work have drawings, details and design analysis prepared. by a Professional Engineer licensed to practice in Florida for the following:

a. Sheeting and bracing.

b. Excavations requiring specially designed sheeting in accordance with safety codes and regulations.

c. If dewatering system is required, prepare drawings and calculations for the dewatering system.

2. Maintain in Contractor's file to comply with OSHA (Occupational Safety and Health Act) requirements and state requirements.

B. Samples:

Before using materials for backfill or bedding, submit samples from each typical source to an approved soils testing laboratory.

C. Reports:

1. Submit soils testing laboratory reports to Engineer for checking as follows:

a. Two (2) copies of the gradation analysis of material from each source used for backfill and bedding.

b. Two (2) copies of the gradation analysis and compaction requirements for each typical class of backfill.

c. Reports from soils testing laboratory including special manipulation or compaction requirements required to achieve specified density or supportive value for each class of backfill.

1.04 PRODUCT DELIVERY, STORAGE AND HANDLING

A. Load and haul away excavated material not suitable for other uses at the site. Keep haul routes clean. Use water, calcium chloride, power broom and other methods to keep haul routes clean and free of dust.

B. Store and stockpile material suitable for backfill within rights-of-way and easements, away from interference with traffic, and nearby residents. Use all stockpiled material as soon as practical. Do not allow material to become contaminated. Do not allow material to erode, wash into excavations, drainage ditches, natural waterways, onto road, or adjacent property.

1.05 WARRANTY AND GUARANTEES

A. By acceptance of payment for the Work of this Section, Contractor guarantees for one year after Final Completion as follows:

1. For trenches in unpaved areas surface settlement will not exceed 2 inches.

2. For trenches in paved and unpaved roadway areas, surface settlement will not occur.

3. For all trenches, pipe zone bedding will not settle or be displaced causing damage or misalignment of utility.

4. In case trench settlement occurs in excess of the above limits, Contractor shall repair all surfaces and utilities at no additional cost to Owner.

1.06 JOB CONDITIONS

A. Maintenance of Traffic:

Notify Traffic Engineer of local jurisdiction, Police and Fire Departments two (2) Working days prior to excavation in streets.

B. Sequencing, Scheduling:

1. Notify Engineer two (2) Working days in advance of construction to check layout.

2. Limit open trench to 300 feet in advance of pipe laying, or of pipe installed and backfilled in one (1) Working day.

3. Complete backfilling and temporary facilities not more than 300 feet in rear of pipe laying.

4. Advance excavation operations ahead of pipe laying to allow for circumstances such as rock, muck, other utilities.

1.07 DEFINITIONS

A. Pipe zone bedding: Backfill placed and compacted including bedding, haunching and initial backfill.

B. Bedding: Material placed and compacted at the bottom of trench or foundation upon which the pipe rests.

C. Haunching: Material placed and compacted from the bedding up to the spring line (horizontal centerline) or the pipe, supporting the bottom half of the pipe.

D. Initial backfill: Material placed and compacted from the spring line of the pipe to 12 inches above top of pipe.

E. Foundation: Material existing or placed and compacted below bedding.

F. Final backfill: Material placed and compacted above initial backfill to the surface or bottom of roadway base.

G. In the Dry: Means +/-2% of the optimum moisture content of the soil in order to achieve a minimum density of 95 percent of the maximum dry density as

determined by AASHTO T-180: Standard Method of Test for Moisture - Density Relations of Soils Using a 4.54 Kg (10 lb) Rammer and a 45 mm (18 inch) drop.

1.08 PROTECTION

A. Sheeting and Bracing:

1. Furnish, put in place, and maintain sheeting and bracing as required to support the sides of excavations, to prevent any movement which could in any way diminish the width of the excavation below that necessary for proper construction, and to protect adjacent structures, power poles, etc. from undermining, and to protect Workers from hazardous conditions of other damage. Such support shall consist of braced steel sheet piling, braced wood lagging and soldier beams or other approved methods. If the Engineer is of the opinion that at any points sufficient or proper supports have not been provided, he may order additional supports put in at the expense of the Contractor, and compliance with such order shall not relieve or release the Contractor from his responsibility for the sufficiency of such supports. Care shall be taken to prevent voids outside of the sheeting, but if voids are formed, they shall be immediately filled and rammed. Where soil cannot be properly compacted to fill a void, lean concrete shall be used as backfill at no additional expense to the Owner.

2. The Contractor shall construct the sheeting outside the neat lines of the foundation unless another configuration is desirable for his method of operation. Sheeting shall be plumb and securely braced and tied in position. Sheeting and bracing shall withstand all pressure to which the structure or trench will be subjected. Any deformation shall be corrected by the Contractor at his own expense so as to provide the necessary clearances and dimensions.

3. Where sheeting and bracing is required to support the sides of excavations of structures, the Contractor shall engage a Professional Geotechnical Engineer, registered in the State of Florida, to design the sheeting and bracing. The sheeting and bracing installed shall conform with the design, and certification of this shall be provided by the Professional Geotechnical Engineer.

4. The installation of sheeting, particularly by driving or vibrating, may cause distress to existing structures. The Contractor shall evaluate the potential for such distress and, if necessary, take all precautions to prevent distress of existing structures because of sheeting installation.

5. The Contractor shall leave in place to be embedded in the backfill all sheeting and bracing not shown on the Drawings but which the Engineer may direct him in writing to leave in place at any time during the progress of the Work for the purpose of preventing injury to structures, utilities, or property, whether public or private. The Engineer may direct that timber used for sheeting and bracing be cut off at any specified elevation.

6. All sheeting and bracing not left in place shall be carefully removed in such manner as not to endanger the construction or other structures, utilities, or property. All voids left or caused by withdrawal of sheeting shall be immediately refilled with sand by ramming with tools especially adapted to that purpose, or otherwise directed by the Engineer.

7. The right of the Owner and Engineer to order sheeting and bracing left in place shall not be construed as creating any obligation on his part to issue such orders, and his failure to exercise his right to do so shall not relieve the Contractor from liability for damage to persons or property occurring from or upon the Work occasioned by negligence or otherwise, growing out of a failure on the part of the Contractor to leave in place sufficient sheeting and bracing to prevent any caving or moving of the ground.

8. No wood sheeting is to be withdrawn if driven below mid-diameter of any pipe, and under no circumstances shall any wood sheeting be cut off at a level lower than 1 foot above the top of any pipe.

B. Pumping and Drainage:

1. Refer to Section 02140: Dewatering.

PART 2 - PRODUCTS

2.01 MATERIALS AND EQUIPMENT

A. Backfill Materials

1. Clean, granular material composed of sand, rock or gravel obtained from the excavation or, if necessary, from a borrow area.

2. Common Fill:

a. Containing no more than 10 percent by weight passing a 200 mesh sieve.

b. Containing no more than 1 percent by weight of organic matter.

c. Maximum particle size: 2 inches.

3. Select Common Fill:

a. Containing no more than 5 percent by weight passing a 200 mesh sieve.

b. Containing no more than 1 percent by weight of organic matter.

c. Maximum particle size: 11/2 inches.

4. Bedding Rock: Material meeting the requirements of FDOT Specification 901-, size number 67 - Coarse Aggregate with the following gradation:

Percent Passing	Size Square Openings
100	l”
90-100	3/4"
20-55	3/8"
0-10	No. 4
0-5	No. 8

5. Backfill material shall be substantially free of clay, organic materials, loam, wood, trash and other objectionable material which may be compressible or which cannot be compacted properly and shall not contain broken concrete, masonry, rubble, or other similar materials it shall have physical properties such that it can be readily spread and compacted during filling.

6. Material falling within the above specifications, encountered during the excavation may be stored in segregated stockpiles for reuse. All material which, in the opinion of the Engineer, is not suitable for reuse, shall be spoiled as specified herein for disposal of unsuitable materials.

B. Water for Compaction:

1. pH of 7.0 to 9.0.

2. Free of acid, alkali or organics injurious to pipe or coatings.

3. Meeting FDOT Specification 983, "Water for Grassing".

C. Cement Concrete:

1. Transit-mixed, 2B-day compressive strength: 3,000 psi.

PART 3 - EXECUTION

3.01 PREPARATION

A. Notification - Before commencing excavation in any part of the job, notify the following:

1. The Owner.

2. The Engineer.

3. Adjacent and affected property occupants.

4. The Fire Department.

5. The Police Department.

6. All public and private utilities whose facilities are in the vicinity of the excavation, including gas and oil pipeline companies, in accordance with Laws of Florida 77-153.

B. Utility Protection and Changes - Where public or private utilities are encountered:

1. Maintain, support, and save all public utilities from damage.

2. Allow reasonable time and space for owners of private utilities to cooperate in maintaining their facilities.

3. Excavate test pits:

a. A minimum of two (2) Working days in advance of construction to determine precise location of obstructions and existing utilities which may affect alignment of the Work.

b. Size: 3 feet square to the depth required, unless larger pit is required to adequately investigate utility locations.

c. Prior to excavation, notify the Engineer and affected utility owners.

d. Test pits shall include excavation, temporary sheeting, dewatering, backfilling, compaction and pavement replacement.

3.02 INSTALLATION

A. Excavation:

1. General:

a. Excavation consists of removal, storage and disposal of material encountered when establishing required grade elevations and in accordance with the notes shown in the Drawings.

b. Authorized earth excavation includes removal and disposal of pavements and other obstructions visible on ground surface, underground structures and utilities indicated to be demolished and removed, and other materials encountered that are not classified as rock excavation or unauthorized excavation.

c. Unauthorized excavation consists of removal of material beyond the limits needed to establish required grade and subgrade elevations without specific direction of the Engineer. Unauthorized excavation, as well as remedial Work shall be at the Contractor's expense.

(1) Under footings, foundation bases or retaining walls, fill unauthorized excavation by extending the indicated bottom elevation of the footing or base to the excavation bottom, without altering required top elevation. Lean concrete fill may be used to bring bottom elevations to proper position, when acceptable to the Engineer.

(2) Elsewhere, backfill and compact unauthorized excavations as specified for authorized excavations of same classification, unless otherwise specified or directed by the Engineer.

d. When excavation has reached required subgrade elevations, make an inspection of conditions. If the material is suitable use Type B bedding, non-undercut trench. If the material is unsuitable which has clay and/or organic material, and if authorized by Engineer to remove, carry excavation deeper and replace excavated material with bedding rock, in accordance with Type A Bedding and Trench Detail as shown in the Drawings. If a layer of shell is encountered at the bedding elevation, then over-excavate the shell to maximum

of 6" below the bedding elevation. Replace the excavated shell with bedding rock. Removal and replacement of unsuitable subgrade material, as directed by the Engineer, will be paid for as extra Work by unit prices established in the Bid form.

e. If the Contractor excavates below grade through error or for his own convenience or through failure to properly dewater the excavation or disturbs the subgrade before dewatering is sufficiently complete, he may be directed by the Engineer to excavate below grade as set forth in the preceding paragraph, in which case the Work of excavating below grade and finishing and placing the refill shall be performed at his own expense.

f. Slope sides of excavations shall comply with state and local codes and ordinances having jurisdiction or as shown on the Drawings. Shore and brace where sloping is not possible due to space restrictions or stability of the material excavated. Sides and slopes shall be maintained in a safe condition until completion of backfilling.

g. Stockpile satisfactory excavated materials at a location approved by the Engineer until required for backfill or fill. Stockpiles shall be placed and graded for proper drainage. All soil materials shall be located away from the edge of excavations. Excess soil materials shall be disposed of as herein specified.

2. Excavation for Structures:

a. All such excavations shall conform to the elevations and dimensions within a tolerance of plus or minus 0.10 feet and extending a sufficient distance from footings and foundations to permit placing and removing form Work, installation of services and other construction, inspection or as shown on the Drawings. In excavating for footings and foundations, care shall be exercised to not disturb the bottom of the excavation. Excavation to final grade shall be by hand just before concrete reinforcement is placed. Bottoms shall be trimmed to required lines and grades to leave a solid base.

3. Trench Excavation:

a. Excavation for all trenches required for the installation of pipes shall be made to the depths indicated on the Drawings and in such a manner and to such widths as will give suitable room for laying the pipe within the trenches, for bracing and supporting and for

pumping and drainage facilities. The bottom of the excavations shall be firm and dry.

b. Excavation shall not exceed normal trench width. Normal trench width is defined as indicated on the Drawings. Any excavation which exceeds the normal trench width shall require special backfill requirements as determined by the Engineer.

c. Rock shall be removed to a minimum 8 inches clearance around the bottom and sides of the pipe being laid.

d. Where pipe is to be laid in gravel bedding or encased in concrete, the trench may be excavated to or just below the designated subgrade provided that the material remaining in the bottom of the trench is no more than slightly disturbed.

e. Where the pipes are to be laid directly on the trench bottom, the lower part of the trenches shall not be excavated to grade by machinery. Manually trim and shape trench bottom to receive pipe at correct line and grade. Shape trench to provide a uniform, continuous support along the entire length of the barrel of each pipe section. Hand-shape firm unyielding bedding so that the bottom segment will be in continuous contact with the pipe barrel.

f. Slope sides of excavations to comply with local codes and ordinances having jurisdiction or as shown on the Drawings. Shore and brace where sloping is not possible due to space restrictions or stability of the material excavated. Sides and slopes shall be maintained in a safe condition until completion of backfilling.

B. Backfill

1. General:

a. Material placed in fill areas under and around structures and pipelines shall be deposited within the lines and to the grades shown on the Drawings making due allowance for settlement of the material. Fill shall be placed only on properly prepared surfaces which have been inspected and approved. If sufficient common fill material is not available from excavation on site, the Contractor shall provide borrow as required.

b. Fill shall be brought up in substantially level lifts starting in the deepest portion of the fill. The entire surface of the Work shall be

maintained free from ruts and in such condition that construction equipment can readily travel over any section. Fill shall not be placed against concrete structures until they have attained sufficient strength.

c. Fill shall be dumped and spread in layers by a backhoe or other approved method unless otherwise specified. During the process of dumping and spreading, all roots, debris and stones greater in size than specified herein shall be removed from the fill areas and the Contractor shall assign a sufficient number of men to this Work to insure satisfactory compliance with these requirements.

d. If the compacted surface of any layer of material is determined to be too smooth to bond properly with the succeeding layer, it shall be loosened by harrowing or by another approved method before the succeeding layer is placed.

e. All fill materials shall be placed and compacted "in the-dry". The Contractor shall dewater excavated areas as required to perform the Work and in such manner as to preserve the undisturbed state of the natural soils.

f. Prior to filling, the ground surface shall be prepared by removing vegetation, debris, unsatisfactory soil materials, obstructions, and deleterious materials. Plow strip or break up sloped surfaces steeper than one vertical to four horizontal so that fill material will bond with the existing surface. When existing ground surface has a density less than that specified herein, break up the ground surface, pulverize, moisture condition to the optimum moisture content and compact to required depth and percentage of maximum density.

g. Before compaction, moisten or aerate each layer as necessary to provide the optimum moisture content. Compact each layer to required percentage of maximum dry density or relative dry density for each classification.

2. Bedding and Backfilling Structures:

a. Bedding rock shall be used for bedding under all structures as indicated on the Drawings. The Contractor shall take all precautions necessary to maintain the bedding in a compacted state and to prevent washing, erosion or loosening of this bed.

b. Select common fill is specified for use as backfill against the exterior walls of structures. Fill shall be placed in layers having a maximum thickness of 8 inches in loose state and shall be compacted sufficiently as specified herein.

c. Backfilling shall be carried up evenly on all walls of the structure. No backfill shall be allowed against walls until the walls and their supporting slabs, if applicable, have attained sufficient strength.

d. In locations where pipes pass through walls, the Contractor shall take precautions to consolidate the refill up to an elevation of at least one (1) foot above the bottom of the pipes by placing select common fill in such areas for a distance of not less than 3 feet either side of the center line of the pipe in level layers not exceeding 8 inches in depth.

e. The surface of filled areas shall be graded to smooth true lines, strictly conforming to grades indicated on the Drawings. No soft spots or uncompacted areas will be allowed in the Work.

f. Temporary bracing shall be provided as required during construction of all structures to protect partially completed structures against all construction loads, hydraulic pressure and earth pressure. The bracing shall be capable of resisting all loads applied to the walls as a results of backfilling.

3. Bedding and Backfilling for Pipes:

a. Bedding for pipe shall be as shown on the Drawings. The Contractor shall take all precautions necessary to maintain the bedding in a compacted state and to prevent washing, erosion or loosening of this bed.

b. Backfilling over and around pipes shall begin as soon as practicable after the pipe has been laid, jointed and inspected and the trench filled with suitable material to the mid-diameter of the pipe. All backfilling shall be prosecuted expeditiously and as detailed on the Drawings.

c. After the pipe is laid to line and grade, place and carefully compact pipe bedding material for the full width of the trench to the springline of the pipe. Place the material around the pipe in 6-inch layers and thoroughly hand tamp with approved tamping sticks supplemented by "walking in" and slicing with a shovel to assure that all voids are filled. Backfill and carefully compact the area

above the pipe springline with pipe cover material to a point 12-inches above the top outside surface of the pipe barrel. Pipe bedding material may, at the Contractor's option, be substituted for pipe cover material. The filling shall be carried up evenly on both sides of the pipe. The remainder of the trench above the compacted backfill shall be filled an thoroughly compacted in one-foot uniform layers.

C. Compaction

1. General:

a. The Contractor shall control soil compaction during construction to provide the minimum percentage of density specified. It shall be the Contractor's responsibility to notify the Engineer in writing that penetration tests can be performed. Written notice from the Contractor shall precede completion of compaction operations by at least two (2) Working days.

b. Material which is too wet shall be spread on the fill area and permitted to dry, assisted by harrowing if necessary, until the moisture content is reduced to allowable limits. If added moisture is required, water shall be applied by sprinkler tanks or other water over the area to be treated and give complete and accurate control of the amount of water to be used. If too much water is added, the area shall be permitted to dry before compaction is continued. The Contractor shall supply all hose, piping, valves, sprinklers, pumps, sprinkler tanks, hauling equipment and other materials and equipment necessary to place water in the fill in the manner specified.

c. When existing trench or excavation bottom has a density less than that specified herein for the particular area classification, the Contractor shall break up the ground surface, pulverize, moisture-condition to the optimum moisture content and compact to required depth and percentage of maximum density.

2. Percentage of Maximum Density Requirements:

a. Fill or undisturbed soil from the bottom of the pipe trench to 1 foot above the pipe shall be densified to a minimum density of 95 percent of the maximum dry density as determined by AASHTO T-180: Standard Method of Test for Moisture-Density Relations of Soils using a 454 Kg (10 lb) Rammer and a 457 mm (18 inch) Drop.

b. Backfill from 1 foot above utility pipes to grade shall be densified to a minimum density of 95 percent of the maximum dry density as determined by AASHTO T-180: Standard Method of Test for Moisture-Density Relations of Soils using a 454 Kg (10 lb) Rammer and a 457 mm (18 inch) Drop.

c. Fill under and around structures, to the extent of the excavation, shall be densified to a minimum density of 95 percent of the maximum dry density as determined by AASHTO T-180: Standard Method of Test for Moisture-Density Relations of Soils using a 454 Kg (10 lb) Rammer and a 457 mm (18 inch) Drop.

d. All fill and backfill for pipelines and structures under roadways or within 6 feet of edge of pavement shall be densified to a minimum density of 98 percent of the maximum dry density as determined by AASHTO T-180: Standard Method of Test for Moisture-Density Relations of Soils using a 454 Kg (10 lb) Rammer and a 457 mm (18 inch) Drop.

D. Grading

1. All areas within the limits of construction, including transition areas shall be uniformly graded to produce a smooth uniform surface. Areas adjacent to structures or paved surfaces shall be as graded to drain away from structures and pavement. Ponding shall be prevented.

2. After grading, the area shall be compacted to the specified depth and percentage of maximum density.

3. No grading is to be done in areas where there are existing pipelines that may be uncovered or damaged until such liens which must be maintained are relocated; or where lines are to be abandoned, all required valves are closed and drains plugged.

3.03 INSPECTION AND TESTING

A. Prior to all Work, carefully inspect the site and verify that construction may properly commence:

1. Verify layout, horizontal and vertical, and conformance of layout with Drawings.

2. Verify limits of construction.

3. Check surface drainage ditches and driveway culverts. Record alignments both vertical and horizontal. Also, inspect culvert piping and immediately report to the Engineer any condition which would prevent their removal and reinstallation.

4. Verify utility locations, including but not limited to aerial, pole lines, buried, underground, transmission, local service and individual connection a minimum of two (2) Working days in advance of the Work.

5. Record location, size and description of property to be removed and replaced including, but not limited to curbs, driveways, pavements, mail boxes, meters and boxes, fences, trees, plantings and lawn furnishings.

6. Accurately survey and record the location of property pins, bench marks, USGS (United States Geological Survey) Monuments, right-of-way markers, within the limits of construction which may be moved by the Contractor's operations.

B. After excavation, verify that utilities to be placed in trenches may be installed in accordance with the Drawings and Specifications.

C. Before backfilling, verify that:

1. Utilities have been installed in accordance with Drawings and Specifications.

2. Other utilities are adequately continued, supported and maintained without damage.

D. In the event of discrepancy or unsatisfactory conditions, immediately notify the Engineer.

E. Do not make alignment changes without authorization of Engineer.

3.04 MAINTENANCE

A. Protection of Graded Areas: Protect newly graded areas from traffic and erosion. Keep free of trash and debris. Repair and reestablish grades in settled, eroded and rutted areas to specified tolerances.

B. Reconditioning Compacted Areas: Where completed compacted areas are disturbed by subsequent construction operations or adverse weather; scarify surface, reshape and compact to required density prior to further construction.

3.05 DISPOSAL OF SURPLUS AND WASTE MATERIAL

A. All surplus and/or unsuitable excavated material shall be transported from Owner's property and legally disposed of. Any permit required for the hauling and disposing of this material beyond Owner's property shall be obtained prior to commencing hauling operations.

B. All costs associated with the disposal of surplus and waste material shall be included in the Contractor's Bid Price. No additional compensation shall be allowed.

3.06 RESTORATION

A. Restoration of Surfaces - After backfilling, restore surface and facilities to a condition as good or better than before start of Work.

1. At crossings of paved surfaces disturbed by excavations, place temporary bituminous patch over the base immediately after backfilling is completed.

2. Refer to Sections 02922 and 02934 – Seeding and Mulching and Solid Sodding, respectively for restoration in unpaved areas.

B. Restoration of Other Improvements:

1. Replace drainage culverts, pipes, end sections, and head walls, removed for excavation to their original position. Provide bedding and backfill suitable for each installation. Shape, trim and compact surface to receive pavement or surface treatment of similar or like kind and quality as that which was removed and as shown on the Drawings.

2. Shape, trim and compact ditches, water courses, and swales to original cross-section and profile unless otherwise specified herein or shown on the Drawings. Place sod and maintain until vegetation has been reestablished. Where water velocities produce scouring or erosion in ditches, provide stabilization as directed by the Engineer.

3.07 MAINTENANCE OF ROADWAYS AND SIDEWALKS

A. Conduct construction operations so as to leave open and free passage at sidewalks, crosswalks, and carriageways.

B. Maintain hydrants, fire-police alarm boxes, and mail boxes accessible for use.

C. Provide temporary bridge(s) of adequate design and construction where open trench crosses walkways, roadways, or driveways.

1. Provide hand railing for bridges used for walks.

2. Maintain temporary bridges in a safe, neat condition, suitably illuminated at night.

D. Temporary Wire Fence:

1. Where trenches and open excavations are left unattended during non-working hours or days, furnish and maintain temporary fences.

2. Provisions for fencing constitute a minimum, and may be in addition to provisions the Contractor would normally make to safeguard his Work operations.

3. Construction:

a. Construct temporary fence to completely surround excavations.

b. Mount "DANGER-KEEP OUT" signs at intervals not exceeding 50 feet along fence line, minimum 2 signs.

c. Provide posts or adequate supports for fencing at intervals not in excess of 10 feet. Stretch wire fabric and fasten at top, middle and bottom of each support.

4. Provide sufficient quantity of planks, timbers, fastenings and supplies on hand at excavation site to meet requirements of construction and for immediate use in case of emergency.

3.08 FIELD QUALITY CONTROL

A. Quality Control Testing During Construction: Allow testing service to inspect and approve subgrades and fill layers.

B. If, in the opinion of the Engineer, based on testing service reports and inspection, subgrade or fills which have been placed are below specified density, provide additional compaction and testing at no additional expense.

END OF SECTION

SECTION 02509

CONCRETE SIDEWALKS

PART 1 - GENERAL

1.01 DESCRIPTION

A. Scope of Work: The work included in this Section consists of furnishing all labor, material, equipment and transportation for the construction of the sidewalks to the lines and grades as shown on the Drawings.

B. Related Work Described Elsewhere:

1. Trenching, Backfilling, and Compacting: Section 02221.

2. Concrete Formwork: Section 03100.

3. Concrete Reinforcement: Section 03200.

4. Cast-In-Place Concrete: Section 03300.

1.02 SUBMITTALS

A. All materials specified shall be certified by the producer or manufacturer that the furnished material meets the specific requirements of the Specifications.

1.03 TESTING

A. Testing requirements and frequencies for concrete sidewalks shall be as outlined in Section 03300: Cast-In-Place Concrete.

PART 2 - PRODUCTS

2.01 MATERIALS

A. Concrete: Concrete shall have a 28 day compressive strength of 3,000 pounds per square inch (psi).

B. Welded Wire Fabric: Welded wire fabric shall conform to the requirements of Section 03200: Concrete Reinforcement.

C. Preformed Joint Filler: Preformed joint filler shall be non-extruding and resilient bituminous type and shall conform to the requirements of ASTM Designation D-1751.

D. Membrane Curing Compound: Membrane curing compound shall be clear fugitive dye and conform to the requirements of AASHTO Designation M-148, Type l-D.

PART 3 - EXECUTION

3.01 PREPARATION

A. Subgrade Condition:

1. The subgrade compaction shall achieve at least 95% of the modified proctor maximum density to a depth of 12 inches, or as otherwise recommended by a Geotechnical Engineer. The finished subgrade shall be maintained in a smooth, compact condition and any areas which are disturbed prior to placing of the concrete shall be restored at the Contractor's expense. The subgrade shall be moist at the time the concrete is placed. Water shall be uniformly applied ahead of the pouring operations. Large boulders and other obstructions shall be removed to a minimum depth of 6 inches below the finished subgrade elevation, and the space shall be backfilled with sand. Base course material or other suitable material shall be thoroughly compacted by rolling or tamping.

2. The subgrade shall be accurately trimmed to the required elevation with a 1/4 inch tolerance. High areas shall be trimmed to proper elevation. Low areas may be filled with suitable material and compacted to the specified density or filled with concrete integrally with the placing of the pavement.

B. Setting Forms: The forms shall be accurately set to line and grade and such that they rest firmly, throughout their entire length upon the compacted subgrade surface. Forms shall be joined neatly and tightly and braced to resist the pressure of the concrete and the finished operations. The alignment and grade of all forms shall be approved before and immediately prior to the placing of concrete.

C. Slipforming: The slipforming method will be allowed, provided that an acceptable finished product, true to line, grade, and cross section is consistently produced.

D. Mixing Concrete: Concrete shall be mixed in accordance with the requirements of Section 03300: Cast-In-Place Concrete.

3.02 INSTALLATION

A. Placing Concrete:

1. The concrete shall be distributed on the subgrade to such depth that, when it is consolidated and finished, the thickness required by the Drawings will be obtained at all points and the surface will at no point be below the grade specified for the finished surface. The concrete shall be deposited on the subgrade in a manner which will require as little rehandling as possible. Placing of the concrete shall be continuous between transverse joints, without the use of intermediate bulkheads.

2. Reinforcement shall be placed as shown on the Drawings and shall be maintained at this location during the placing and finishing operations.

3. Concrete shall be thoroughly consolidated against and along the faces of all forms by means of vibrators. Vibrators shall not be permitted to come in contact with the subgrade or a side form. Vibration at any one location shall not continue so long as to produce puddling or the accumulation of excessive grout on the surface. In no case shall the vibrator be operated longer than 15 seconds in any one location.

B. Striking-off, Consolidating and Finishing Concrete: Immediately after the placing, the concrete shall be struck off, consolidated and finished, to produce a finished product conforming to the cross section, width and surface finish required by the Drawings and Specifications.

C. Straightedging and Surface Corrections:

1. After floating has been completed and the excess water removed, but while the concrete is still in a plastic state, the surface of the concrete shall be tested for trueness with an accurate 10 foot straightedge. The straightedge shall be furnished by the Contractor. The straightedge shall be held in successive positions parallel to the walk center line, in contact with the surface, and the whole area tested from one side of the slab to the other as necessary. The advance along the walk shall be in successive stages of not more than one-half the length of the straightedge.

2. Any depressions shall be immediately filled with freshly mixed concrete and struck-off, consolidated and refinished. High areas shall be cut down and refinished.

3. Straightedge testing and surface correction shall continue until the entire surface appears to conform to the required grade and cross section. All

surface irregularities exceeding 1/4 inch in a 10 foot straightedge span shall be corrected.

D. Final Finish: As soon as the water sheen has disappeared and just before the concrete becomes non-plastic, the concrete shall be given a light broom finish perpendicular to the forms. Finally, all edges, including expansion joint edges, shall be finished with an edging tool having a radius of 1/4 inch.

E. Joints:

1. Transverse Construction Joints: Transverse construction joints shall be constructed at the end of all pours and at other locations where the pouring operations are stopped for as long as 30 minutes. Construction joints, however, shall not be placed within 5 feet of any other transverse joint or of either end of a section of walk. If sufficient concrete has not been placed to form a slab at least five feet long, the excess concrete, back to the last preceding joint, shall be removed. The joints shall be formed by placing a wood or metal bulkhead accurately and securely in place, in a plane perpendicular to the profile and center line of the walk. Construction joints shall have tooled edges with a 1/4 inch radius.

2. Transverse Contraction Joints: Transverse contraction joints shall be formed at five foot intervals and shall consist of planes of weakness created by an edging tool. The cut in the fresh concrete shall be perpendicular to the surface of the walk, shall extend to a depth of 1-1/2 inches below the top surface and shall have 1/4 inch radius tooled edges.

3. Transverse Expansion Joints: 1/2 inch expansion joints shall be formed by placing preformed joint filler around all structures and at intervals not exceeding 100 feet.

F. Curing:

1. After the finishing operations have been completed and as soon as the concrete has hardened sufficiently that marring of the surface will not occur, the entire surface and the edges of the newly placed concrete shall be covered and cured with membrane curing compound.

2. Curing compound shall be uniformly applied to the surfaces to be cured, in a single coat, continuous film, at the rate of one gallon to not more than 200 square feet, by a sprayer.

3. Curing compound shall not be applied during periods of rainfall. Should the film become damaged from any cause within the required curing period, the damaged portions shall be repaired immediately with additional

compound. Upon removal of side forms the sides of the slabs exposed shall immediately be coated to provide a curing treatment equal to that provided for the surface.

G. Form Removal: After the concrete has sufficiently set a minimum of 12 hours, the Contractor shall remove the forms and shall backfill the space on each side. The earth shall be compacted and graded in a satisfactory manner without damage to the concrete work. Honeycombs shall be filled with sand cement mortar. Plastering will not be allowed on the face of the walk. Rejected walk shall be removed and replaced by the Contractor without additional compensation.

END OF SECTION

SECTION 02574

PAVEMENT REMOVAL AND REPLACEMENT

PART I - GENERAL

1.01 DESCRIPTION

A. Scope of Work: Work included under this Section consists of cutting, removing, protecting and replacing existing pavements, driveways, sidewalks, curb and combination curb and gutter of the various types encountered that is not otherwise included in the roadway/drainage work.

B. Protection of Existing Improvements: The Contractor shall be responsible for the protection of all pavements, sidewalks and other improvements within the work area. All damage to such improvements, as a result of the Contractor's operations, beyond the limits of the work of pavement replacement as described herein, shall be repaired by the Contractor at his expense.

C. Related Work Described Elsewhere:

1. Trenching, Backfilling and Compacting: Section 02221.

PART 2 - PRODUCTS

2.01 MATERIALS

A. Materials, including stabilized subgrade, base, bituminous prime and tack coat, and asphaltic concrete for the above work shall meet the requirements established herein.

1. Stabilized subgrade shall conform to Section 160 of the Florida Department of Transportation (FDOT) Standard Specification of Road and Bridge Construction (latest edition).

2. Base material shall be limerock conforming to Section 911 of the FDOT Standard Specification of Road and Bridge Construction (latest edition).

3. Bituminous prime and tack coat materials shall conform to Section 300 of the FDOT Standard Specification of Road and Bridge Construction (latest edition).

4. Asphalt concrete shall match the pavement detail in the Drawings and conform to Section 334 of the FDOT Standard Specification of Road and Bridge Construction (latest edition).

5. Portland cement concrete shall conform to Section 350 of the FDOT Standard Specification of Road and Bridge Construction (latest edition).

PART 3 - EXECUTION

3.01 PERFORMANCE

A. Removals:

1. Pavement Removal:

a. Where existing pavement is to be removed, the surfacing shall be mechanical saw cut prior to trench excavation, leaving a uniform and straight edge, with minimum disturbance to the remaining adjacent surfacing. The width of cut for this phase of existing pavement removal shall be minimized.

b. Immediately following the specified backfilling and compaction, a temporary sand seal coat surface or temporary asphalt surface shall be applied to the cut areas. This temporary surfacing shall provide a smooth traffic surface with the existing roadway and shall be maintained until final restoration. Said surfacing shall remain for 10 days in order to assure the stability of the backfill under normal traffic conditions. Following this period and prior to 15 days after application, the temporary surfacing shall be removed and final roadway surface restoration accomplished.

c. In advance of final restoration, the temporary surfacing shall be removed and the existing pavement mechanically sawed straight and clean to the dimensions specified in the drawings. Following the above operation, the Contractor shall proceed immediately with final pavement restoration in accordance with these requirements.

2. Sidewalk, Drive & Curb Removal: Concrete sidewalks, curbs, combination curb and gutter, walks, drive ribbons, or driveways shall be removed by initially sawing the structure, with a suitable power saw, as specified above for pavement. The removal line shall be extended to the next joint, each way. After sawing, the material shall be removed. Temporary paths of travel shall be provided to maintain pedestrian traffic.

Particular attention should be given to providing accessible routes to the disabled.

B. Restorations:

1. General: Street or roadway pavement cut and removed in connection with trench excavation shall be replaced or restored in equal or better condition than the original and as shown on the Drawings. Street or roadway pavement restoration shall begin immediately upon completion of backfill and compaction or curing of flowable backfill. The Drawings indicate minimum requirements.

2. Asphalt Pavement Restoration: Restoration of existing pavement shall be in accordance with the provisions of Section 334 of the FDOT Standard Specifications for Road and Bridge Construction (latest edition). Asphaltic concrete shall match the pavement detail outlined on the Drawings.

3. Asphalt Driveway Restoration: Driveway pavement with base cut and removed in connection with trench excavation shall be replaced or restored as specified above for street or roadway pavement, except the new base course shall equal the existing base course in thickness, except that in no case shall new driveway base course be less than 8 inches in thickness and the asphaltic concrete shall be SuperPave 9.5, 3 inches thick. Muck or unsuitable material found under existing driveway construction will not be removed and replaced.

4. Concrete, Sidewalk, Walkway, Driveway Ribbon and Curb Restoration:

   a. Concrete sidewalks, walkways, driveways, driveway ribbons and curbs required to be removed for the installation of facilities under this Contract shall be restored. Class B concrete shall be used in all cases.

   b. Replaced portions of these items shall conform to the lines, grades, and cross sections of the removed portions. Concrete sidewalks and walkways subject to vehicular traffic shall be of 6-inch thickness; concrete sidewalks and walkways not subject to vehicular traffic shall be of 4-inch thickness; concrete driveways and driveway ribbons shall be 6-inch thickness. Replaced concrete curb and/or gutter shall extend the next control joint, each way.

5. Concrete Pavement Restoration: Rigid pavement shall be replaced in kind with Class B concrete, using high early strength cement. The base course for rigid pavement shall be replaced in kind and compacted to a thickness to match the existing base.

6. Asphaltic Concrete Surface course Overlay:

   a. The work under this section includes asphaltic concrete surface course overlay paving as and where directed by the Engineer. Where this paving is directed it shall take the place of asphaltic concrete pavement restoration as specified herein above. This surface course overlay shall extend over the reconstructed base course and the existing pavement to the limits directed by the Engineer, which generally shall be the full width of the roadway.

   b. After the base course construction in the trench area has been completed and primed, the asphalt pavement surface shall be tack coated and the asphaltic concrete shall be constructed in accordance with the requirements specified above for pavement restoration in the thickness as shown in the pavement detail on the Drawings.

END OF SECTION

SECTION 02922

SEEDING AND MULCHING

PART 1- GENERAL

1.01 SCOPE OF WORK

A. Furnish all labor, materials, equipment and incidentals required to prepare lawn bed, seed and mulch and establish a stand of grass in those areas that require temporary stabilization as specified.

B. Areas seeded shall include all areas disturbed during construction that are left bare for greater than 14 days.

1.02 SUBMITTALS

A. Submit to the Engineer as provided in Section 01340, identification labels and certification that all seed is Argentine Bahia.

PART 2 - PRODUCTS

2.01 SEED

A. Species to be Argentine Bahia Seed. Argentine Bahia grass seed shall have a minimum pure seed content of 95 percent (95%) with a minimum germination of 80 percent (80%).

B. Dry Mulch: The mulch material used shall normally be dry mulch of straw or hay, consisting of oat, rye, or wheat straw, or of pangola, peanut, coastal bermuda or bahia grass hay. Only undeteriorated mulch which can readily be cut into the soil shall be used.

PART 3 - EXECUTION

3.01 PREPARATION

A. See section on Lawn Bed Preparation for Sodding, Section 02934, Article 3.01.

3.02 INSPECTION

A. Verify that soil preparation and related preceding Work has been completed.

B. Do not start Work until conditions are satisfactory.

3.03 INSTALLATION

A. Apply the lawn seed with a drop type spreader while soil is still loose at the rate of 8 pounds per 1,000 square feet.

B. Apply half the seed in one direction and the remainder at right angles to the first seeding.

C. After applying the seed, rake the seed into the seed bed to a depth of 1/2 inch.

D. Approximately 2 inches, loose thickness, of mulch material shall be applied uniformly over the seed bed and cut into the soil so as to produce a loose mulched thickness of 3 to 4 inches. The area shall be rolled thoroughly with a lawn roller immediately after completion of the seeding and mulching.

E. Water the seeded area lightly and again roll the area with a light lawn roller to assure firm contact of the soil and seed.

3.04 MAINTENANCE

A. Soil should be kept continuously moist, but not too wet, until seed has germinated and become well established.

B. The Contractor shall, at his expense, maintain the planted areas in a satisfactory condition until final acceptance of the Project. Such maintenance shall include watering, mowing, and filling, leveling, and repairing of any washed or eroded areas, as may be necessary. The Engineer may require replanting of any areas in which the establishment of the grass stand does not appear to be developing satisfactorily. Replanting shall be performed at the Contractor's expense except when it is determined that such replacement was due to circumstances beyond the Contractor's control.

3.05 CLEANING

A. Immediately clean spills from paved and finished surface areas.

B. Remove debris and excess materials from Project site.

END OF SECTION

SECTION 02934

SOLID SODDING

PART 1 - GENERAL

1.01 DESCRIPTION

A. Scope of Work: The Work specified in this Section consists of establishing a stand of grass, within the areas indicated on the Drawings, by furnishing and placing grass sod. Also included are fertilizing, watering and maintenance as required to assure a healthy stand of grass. Solid sodding shall be placed on all slopes greater than 4:1, as indicated in the construction plans, where existing sod is removed or disturbed by Contractor's Operations, and where specified by City permits.

1.02 SUBMITTALS

A. A certification of sod quality by the producer shall be delivered to the Engineer ten (10) days prior to use.

PART 2 - PRODUCTS

2.01 GRASS SOD

A. Grass sod shall, in most cases, be Bahia grass. However, in locations with St. Augustine and the like, Contractor shall replace like sod. Sod shall be well matted with grass roots. The sod shall be taken in rectangles, preferably 12 inch by 24 inch, shall be a minimum 2 inches in thickness and shall be live, fresh and uninjured at the time of planting.

B. It shall be reasonably free of weeds and other grasses and shall have a soil mat of sufficient thickness adhering firmly to the roots to withstand all necessary handling. The sod shall be planted as soon as possible after being dug and shall be shaded and kept moist until it is planted.

2.02 FERTILIZER

A. Commercial fertilizer shall comply with the state fertilizer laws.

B. The numerical designations for fertilizer indicate the minimum percentages (respectively) of (1) total nitrogen, (2) available phosphoric acid and (3) water-soluble potash contained in the fertilizer.

C. The chemical designation of the fertilizer shall be 12-0-8. At least 50 percent (50%) of the nitrogen shall be derived from organic sources. At least 50 percent (50%) of the phosphoric acid shall be from normal super phosphate or an equivalent source which will provide a minimum of two (2) units of sulfur. The amount of sulfur shall be indicated on the quantitative analysis card attached to each bag or other container.

2.03 WATER FOR GRASSING

A. The water used in the sodding operations shall be the responsibility of the Contractor.

PART 3 - EXECUTION

3.01 PREPARATION OF GROUND

A. The area over which the sod is to be placed shall be scarified or loosened to a depth and then raked smooth and free from debris. Where the soil is sufficiently loose and clean, the Engineer, at his discretion, may authorize the elimination of ground preparation.

3.02 APPLICATION OF FERTILIZER

A. Before applying fertilizer, the soil pH shall be brought to a range of 6.0 to 7.0.

B. The fertilizer shall be spread uniformly over the area to be sodded at the rate of 700 pounds per acre, or 16 pounds per 1,000 square feet, by a spreading device capable of uniformly distributing the material at the specified rate. Immediately after spreading, the fertilizer shall be mixed with the soil to a depth of approximately 4 inches.

C. On steep slopes, where the use of a machine for spreading or mixing is not practicable, the fertilizer shall be spread by hand and raked in and thoroughly mixed with the soil to a depth of approximately 2 inches.

3.03 PLACING SOD

A. The sod shall be placed on the prepared surface, with edges in close contact and shall be firmly and smoothly embedded by light tamping with appropriate tools.

B. Where sodding is used in drainage ditches, or on slopes of 4:1 or greater, the setting of the pieces shall be staggered so as to avoid a continuous seam along the line of flow. Along the edges of such staggered areas, the offsets of individual

strips shall not exceed 6 inches. In order to prevent erosion caused by vertical edges at the outer limits, the outer pieces of sod shall be tamped so as to produce a featheredge effect.

C. On slopes greater than 2 to 1, the Contractor shall, if necessary, prevent the sod from sliding by means of wooden pegs driven through the sod blocks into firm earth, at suitable intervals.

D. Sod which has been cut for more than 72 hours shall not be used unless specifically authorized by the Engineer after his inspection thereof. Sod which is not planted within 24 hours after cutting shall be stacked in an approved manner and maintained and properly moistened. Any pieces of sod which, after placing, show an appearance of extreme dryness shall be removed and replaced by fresh, uninjured pieces.

E. Sodding shall not be performed when weather and soil conditions are, in the Engineer's opinion, unsuitable for proper results.

3.04 WATERING

A. The areas on which the sod is to be placed shall contain sufficient moisture for optimum results. After being placed, the sod shall be kept in a moist condition to the full depth of the rooting zone for at least 2 weeks. Thereafter, the Contractor shall apply water as needed until the sod roots and starts to grow for a minimum of 60 days (or until final acceptance, whichever is latest).

3.05 MAINTENANCE

A. The Contractor shall, at his expense, maintain the sodded areas in a satisfactory condition until final acceptance of the Project. Such maintenance shall include repairing of any damaged areas and replacing areas in which the establishment of the grass stand does not appear to be developing satisfactorily.

B. Replanting or repair necessary due to the Contractor's negligence, carelessness or failure to provide routine maintenance shall be at the Contractor's expense.

END OF SECTION

DIVISION 3

CONCRETE

SECTION 03100

CONCRETE FORMWORK

PART 1 - GENERAL

1.01 DESCRIPTION

A. The work included in this Section consists of providing all labor, materials and equipment necessary for providing and installing formwork for concrete.

B. Related Work Described Elsewhere:

1. Concrete Sidewalks: Section 02509.

2. Concrete Reinforcement: Section 03200.

3. Concrete Joints: Section 03262.

4. Cast-in-Place Concrete: Section 03300.

C. General Design and Responsibility:

Structural design responsibility: All forms and shoring shall be designed at the Contractor's expense by a Professional Engineer registered in the State of Florida Formwork shall be designed and erected in accordance with the requirements of ACI 301 and ACI 318 and as recommended in ACI 347 and shall comply with all applicable regulations and codes. The design shall considered any special requirements due to the use of plasticized and/or retarded set concrete. The Contractor shall be responsible for safety in its construction and removal.

1.02 QUALITY ASSURANCE

A. Qualifications: Formwork shall be constructed in accordance with the specified standards, as well as all pertinent codes and regulations. Where provisions of pertinent codes conflict with the requirements of this section of these specifications, the more stringent provisions shall govern.

B. Standards: Unless otherwise indicated, all materials, workmanship and practices shall conform to the following standards:

1. American Concrete Institute (ACI):

a. ACI 347 - Guide for Concrete Formwork.

b. ACI 301 - Specifications for Structural Concrete for Buildings.

c. ACI 318 - Building Code Requirements for Reinforced Concrete.

2. American Plywood Association (APA):

a. Material grades and designations as specified.

3. Building Codes:

a. Standard Building Code (SBCCI)

b. Local Codes and regulations.

C. Preplacement checklist. The Contractor, as part of his Quality Control Plan, shall develop and submit for approval a Preplacement Checklist form to cover the following items:

1. Reference Drawings covering the placement for all trades and disciplines.

2. Date and time scheduled for placement and the actual date and time of placement.

3. Foreman name, placement number, number of truckloads and number of cylinders.

4. Checklist items such as embeds (list each), subgrade, rebar, forms, alignment, plumbness, etc.

5. Signoff's for foreman, Contractor's Quality Control representative, each subcontractor foreman (major subs, mechanical, electrical, plumbing, etc.) and Engineer.

D. No concrete may be placed until the checklist is properly and completely signed off. Failure to comply with this provision can be grounds for rejecting the work. The checklist shall be weather protected and located with the foreman or at the foreman's station.

1.03 SUBMITTALS

A. Submit shop drawings and product data in accordance with Section 01340, showing materials of construction and details of installation for:

1. Location and sequence of the concrete placements. Indicate locations of joints and panel sizes and patterns. Show location of form ties on architectural surfaces.

2. Review of pour sequence, form system, and panel layout shall be for appearance and strength of the completed structure only. Review by the Engineer of forming plans or procedures shall not relieve the Contractor of responsibility for the strength, safety or correctness of methods used, the adequacy of equipment, or from carrying out the work in full compliance with the requirements of the Drawings and Specifications.

B. Samples:

1. The Contractor shall demonstrate to the Engineer on a designated area of the concrete substructure exterior surface that the form release agent will not adversely affect concrete surfaces to be painted, coated or otherwise furnished and will not affect the forming materials.

PART 2 - PRODUCTS

2.01 MATERIALS

A. Form Lumber: Use form lumber when in contact with exposed concrete, conforming to one (1) of the following, a combination thereof, or equivalent as approved by the Engineer.

1. Lumber: Southern Pine No. 2 grade, seasoned, surfaced on four (4) sides.

2. Plywood: Shall be new and unused "Plyform", Class I or II, bearing the label of the American Plywood Association (Minimum 3/4 inch thickness).

a. All joints or gaps in forms shall be taped, gasketed, plugged, and/or caulked with an approved material so that the joint will remain watertight and will withstand placing pressures without bulging outward or creating surface patterns.

B. Form Ties: Use form ties which do not leave an open hole through the concrete and which permit neat and solid patching at every hole. Use embedded rods with integral water stops and cones to provide a 1½ inch breakback. Wire ties and wood spreaders will not be permitted.

C. Form Release Agent:

1. Coat all forming surfaces in contact with concrete using an effective, non-staining, non-residual, water based, bond-breaking form coating that leaves the concrete with a paintable surface unless otherwise noted. Form release agents used in potable water containment structures shall be

suitable for use in contact with potable water and shall be non-toxic and free of taste or odor.

D. Chamfer Strips and Moldings: Chamfer strips shall be polyvinyl strips or approved equal, designed to be nailed in the forms to provide a 3/4 inch chamfer (unless indicated otherwise) at exposed edges of concrete members. Rectangular or trapezoidal moldings shall be placed in locations requiring sealants where specified or shown on the Drawings. Sizes of moldings shall conform to the sealants manufacturer's recommendations.

E. Metal Forms: Metal forms may be used when approved by the Engineer and shall be of an appropriate type for the class of work involved.

PART 3 - EXECUTION

3.01 INSTALLATION

A. Construction of Formwork: Forms shall be sufficiently strong to withstand the pressure resulting from the placement and vibration of concrete and shall be sufficiently rigid to maintain specified tolerances. Forms shall be sufficiently tight to prevent loss of mortar, and shall be adequately braced against lateral, upward or downward movement.

B. Coating of Forms: Apply form coating to board forms prior to placing reinforcing. Keep form coatings off steel reinforcing, items to be embedded and previously placed concrete.

C. Form Erection:

1. Provide a means of holding adjacent edges and ends of panels and sections tightly together and in accurate alignment so as to prevent the formation of ridges, fins, offsets, or similar surface defects of the finished concrete. Insure that forms may be removed without injury to the surface of the finished concrete.

2. Provide a positive means of adjustment of shores and struts. Insure that all settlement is taken up during concrete placing.

3. Temporary openings shall be provided in wall forms to limit the free fall of concrete to a maximum of 6 feet unless an elephant trunk is used. Such openings shall be located to facilitate placing and consolidation and shall be spaced no more than 8 feet apart. Temporary openings shall also be provided in the bottom of wall and column forms and elsewhere as necessary to facilitate cleaning and observation immediately prior to placing.

4. Do not embed any form-tying device or part thereof other than metal in concrete.

5. Form surfaces of concrete members except where placement of the concrete against the ground is shown on the drawings. The dimensions of concrete members shown on the Drawings apply to formed surfaces, except where otherwise indicated.

D. Formwork Reuse: Reuse only forms which maintain a uniform surface texture on exposed concrete surfaces. Apply light sanding between uses to obtain such a uniform texture. All surfaces to be in contact with concrete shall be thoroughly cleaned, all damaged places repaired, all projecting nails withdrawn and all protrusions smoothed. Plug unused tie rod holes with corks, shave flush, and sandpaper on the concrete surface side. Reuse of wooden forms for other than rough finish will be permitted only if a "like new" condition of the form is maintained.

E. Metal Forms:

Metal forms shall be thoroughly cleaned and mill scale and other ferrous deposits shall be sandblasted or otherwise removed from the contact surface for all forms, except those utilized for surfaces receiving a rough finish. All forms shall have the contact surfaces coated with a release agent.

3.02 TOLERANCES

A. Concrete Tolerance:

1. Vertical, lateral, and level alignments and cross-sectional dimensions shall comply with ACI 117.

2. The following table indicates tolerances or allowable variations from dimensions or positions of structural concrete work:

Maximum Tolerance	(inches)
Sleeves and Inserts	+1/4 to -1/4
Projected ends of anchors	+1/4 to 0.0
Anchor bolt setting	+1/4 to -1/4
Finished concrete, all locations	+1/4 to -1/4 per in. 10-feet of length

The planes or axes from which the above tolerances are to be measured shall be as follows:

Sleeves and Inserts	Centerline of sleeve or insert

Projected Ends of	Plane perpendicular to the end of the anchor
Anchor	As located on the Drawings.
Anchor Bolt Setting	Centerline of anchor bolt
Finish Concrete	The concrete surface as located on the Drawings.

3. Where equipment is to be installed, comply with manufacturer's tolerances if more severe than above.

B. Form Tolerances:

1. Forms shall be surfaced, designed, and constructed in accordance with the recommendations of ACI 347 and shall meet the following additional requirements for the specified finishes.

2. Formed Surface Exposed to View: Edges of all form panels in contact with concrete shall be flush within 1/32-inch and forms for plane surfaces shall be such that the concrete will be plane within 1/16-inch in four feet. Forms shall be tight to prevent the passage of mortar, water and grout. The maximum deviation of the finish wall surface at any point shall not exceed 1/4-inch from the intended surface as shown on the Drawings. Form panels shall be arranged symmetrically and in an orderly manner to minimize the number or seams.

3. Formed surfaces not exposed to view or buried shall meet requirements of Class "C" Surface in ACI 347.

4. Formed rough surfaces including mass concrete, pipe encasement, electrical duct encasement, and other similar installations shall have no minimum requirements for surface smoothness and surface deflections. The overall dimensions of the concrete shall be plus or minus 1-inch.

5. Formed concrete Surfaces to Receive Paint: Surface deflections shall be limited to 1/32-inch at any point and the variation in wall deflection shall not exceed 1/16-inch per 4 feet. The maximum deviation of the finish wall surface at any point shall not exceed 1/4-inch from the intended surface as shown on the Drawings.

C. Formed Openings: Openings shall be of sufficient size to permit final alignment of the items within it without deflection or offsets of any kind and to allow space for packing where the items pass through the wall to ensure water tightness around openings so formed. Provide openings with continuous keyways with waterstops where required, and provide a slight flare to facilitate grouting and the

escape of entrained air during grouting. Provide formed openings with reinforcement as indicated and specified. Reinforcing steel shall be at least 2 inches clear from the opening.

D. Embedded Items: Set anchor bolts and other embedded items accurately and hold securely in position in the forms until the concrete is placed and set. Check all special castings, channels, or other metal parts that are to be embedded in the concrete prior to and again after concreting. Check all nailing, blocks, plugs and strips necessary for the attachment of trim, finish and similar work prior to concreting.

E. Pipes and Wall Spools Cast in Concrete:

1. Install wall spools, wall flanges and wall anchors before placing concrete. Do not weld, tie or otherwise connect the wall spools to the reinforcing steel.

2. Support pipe and fabricated fittings to be encased in concrete on concrete piers or pedestals. Carry concrete supports to firm foundations so that no settlement will be possible during construction.

3.03 REMOVAL OF FORMS

A. The Contractor shall be responsible for all damage resulting from removal of forms. Forms and shoring for structural slabs or beams shall remain in place in accordance with ACI 301 and ACI 347. Form removal shall conform to the requirements specified in Section 03300, Cast-in-Place Concrete.

3.04 INSPECTION

A. The Engineer shall be notified when the forms are complete and ready for inspection at least six hours prior to the proposed concrete placement.

B. Failure of the forms to comply with the requirements specified herein, or to produce concrete complying with requirements of these Specifications, shall be grounds for rejection of that portion of the concrete work. Rejected work shall be repaired or replaced as approved by the Engineer at not addition cost to the Owner. Such repair or replacement shall be subject to the requirements of these Specifications and approval of the Engineer.

END OF SECTION

SECTION 03200

CONCRETE REINFORCEMENT

PART 1 - GENERAL

1.01 DESCRIPTION

A. Scope of Work: The work in this Section consists of providing all labor, materials, equipment and incidentals required to install all steel bars, steel wire and wire fabric required for the reinforcement of concrete, as shown on the Drawings, and as specified herein.

B. Related Work Described Elsewhere:

1. Concrete Formwork: Section 03100.

2. Cast-in-Place Concrete: Section 03300.

1.02 QUALITY ASSURANCE

A. Standards: Unless otherwise indicated, all materials, workmanship and practices shall conform to the following standards:

1. American Concrete Institute (ACI)

a. ACI 117 - Standard Tolerance for Concrete Construction and Materials.

b. ACI 301 - Specifications for Structural Concrete.

c. ACI 318 - Building Code Requirements for Reinforced Concrete.

d. ACI 350R - Environmental Engineering Concrete Structures.

e. ACI 315 - ACI Detailing Manual.

2. American Society for Testing and Materials (ASTM)

a. ASTM A82 - Specification for Steel Wire, Plain, for Concrete Reinforcement.

b. ASTM A184 - Specification for Fabricated Deformed Steel Bar Mats for Concrete Reinforcement.

c. ASTM A185 - Specification for Steel Welded Wire Fabric, Plain, for Concrete Reinforcement.

d. ASTM A496 - Specification for Steel Wire Deformed, for Concrete Reinforcement.

e. ASTM A497 - Specification for Welded Deformed Steel Wire Fabric for Concrete Reinforcement.

f. ASTM A615 - Specification for Deformed and Plain Billet-Steel Bars for Concrete Reinforcement.

g. ASTM A767 - Specification for Zinc-Coated (Galvanized) Steel Bars for Concrete Reinforcement.

h. ASTM A775 - Specification for Epoxy-Coated Reinforcing Steel Bars.

i. ASTM A884 - Specification for Epoxy-Coated Steel Wire and Welded Wire Fabric for Reinforcement.

3. American Welding Society (AWS)

a. AWS D1.4 Structural Welding Code - Reinforcing Steel.

4. Concrete Reinforcing Steel Institute (CRSI)

a. CRSI Manual of Standard Practices.

5 Building Codes

a. Standard Building Code (SBCCI).

b. Local codes and regulations.

1.03 SUBMITTALS

A. Materials and Shop Drawings:

1. Submit mill test certificates identifying chemical and physical analyses for each load of reinforcing steel delivered.

B. Submit shop drawings for review in accordance with Section 01340: Shop Drawings, Working Drawings and Samples. Submit reinforcing bending lists and

placing drawings for all reinforcing. Placing drawings shall include wall elevations, plan views, and sections to clearly show the reinforcing placing procedures. Placing drawings shall indicate all openings (mechanical, electrical, equipment), including additional reinforcing at openings and intersecting wall, beam and footing arrangements as indicated on the structural drawings and specified herein. Placing drawings shall be coordinated with the concrete placing schedule. Each bending list and placing drawing submitted shall be complete for each major element of a structure (grade slabs, footings, walls, floor or beams), including all dowels and other bars as required. Furnishing such lists shall not be construed that the list will be reviewed for accuracy. The Contractor shall be wholly and completely responsible for the accuracy of the lists and for furnishing and placing reinforcing steel in accordance with the details shown on the plans and as specified.

1.04 PRODUCT DELIVERY, STORAGE AND HANDLING

A. Reinforcement shall be shipped to the work with bars of the same size and shape fastened in bundles with metal identification tags with waterproof markings giving size and mark securely wired on. The identification tags shall be labeled with the same designation as shown on the submitted bar lists and shop drawings.

B. All bars shall be stored off the ground and shall be protected from moisture and be kept free from dirt, oil, or injurious contaminants.

PART 2 - PRODUCTS

2.01 MATERIALS

A. Concrete reinforcement in sizes No. 3 (3/8 inch) and larger shall be deformed steel bars of the same sizes and shapes indicated on the Drawings. The steel shall be newly rolled stock of domestic manufacture, substantially free from mill scale, rust, dirt, grease, or other foreign matter. Bars shall be of intermediate grade, deformed billet steel conforming to ASTM Specification A-615, Grade 60, including all supplementary requirements.

B. Rail-steel bars will not be allowed in the work.

C. Reinforcement shall be accurately fabricated to the dimensions indicated on the Drawings. Particular care shall be exercised not to have stirrups oversized in order to maintain proper coverage of concrete. Stirrups and tie bars shall be made around a pin having a diameter not less than two (2) times the maximum thickness of the bar. Bends for other bars shall be made around a pin having a diameter not less than five (5) times the minimum thickness of the bar except for bars larger than 1 inch, in which case the bends shall be made around a pin of eight (8) bar

diameters. All bars shall be bent cold. Bars reduced in section or with kinks or bends not shown on the Drawings will not be accepted.

D. Wire fabric shall conform to ASTM Specification A-185, galvanized for Welded Steel Wire Fabric for Concrete Reinforcement. Welded wire fabric shall be furnished in flat sheets, rolled WWF is not permitted.

E. Wire tie shall be 16-gauge minimum, zinc coated annealed, conforming to ASTM Specification A82.

F. Bar supports in beams and slabs exposed to view after for stripping shall be galvanized or plastic coated. Use concrete supports for reinforcing in concrete placed on grade.

G. Coupler Splice Devices: Tension couplers capable of developing the ultimate strength of the bar as manufactured by Erico Products Inc., Solon, Ohio, or equal and where approved by the Engineer.

H. Reinforcing Steel Accessories

1. Plastic Protected Bar Supports: CRSI Bar Support Specifications, Class 1 - Maximum Protection.

2. Stainless Steel Protected Bar Supports: CRSI Bar Support Specifications, Class 2 - Moderate Protection.

3. Precast Concrete Block Bar Supports: CRSI Bar Support Specifications, Precast Blocks.

PART 3 - EXECUTION

3.01 INSTALLATION

A. Surface condition, bending, spacing, and tolerances of placement of reinforcement shall comply with the CRSI. The CONTRACTOR shall be solely responsible for providing an adequate number of bars and maintaining the spacing and clearances shown on the Drawings.

B. Except as otherwise indicated on the Drawings, the minimum concrete cover of reinforcement shall be as follows:

1. Concrete cast against and permanently exposed to earth: 3-in.

2. Concrete exposed to soil, water, sewage, or weather: 2-in.

3. Concrete not exposed to soil, water, sewage, or weather:

a. Slabs (top and bottom cover), walls and joists: 3/4 in.

b. Beams and columns (principal reinforcement, ties, spirals, and stirrups) 1-1/2 inc.

C. Reinforcement which will be exposed for a considerable length of time after being placed shall be coated with a heavy coat of neat cement slurry.

D. No reinforcing steel bars shall be welded either during fabrication or erection unless specifically shown on the Drawings or specified, or unless prior written approval has been obtained from the Engineer. All bars that have been welded, including tack welds, without such approval shall be immediately removed from the work. When welding of reinforcement is approved or called for, it shall comply with AWS D1.4.

E. Reinforcing steel interfering with the location of other reinforcing steel, conduits or embedded items, may be moved within the specified tolerances or one bar diameter, whichever is greater. Greater displacement of bars to avoid interference, shall only be made with the approval of the Engineer. Do not cut reinforcement to install inserts, conduits, mechanical openings or other items without the prior approval of the Engineer.

F. Securely support and tie reinforcing steel to prevent movement during concrete placement by using zinc coated wire ties of not less than No. 16 gauge or suitable clips at intersections. Secure dowels in place before placing concrete.

G. Do not press dowels into the concrete after the concrete has been placed.

H. Flat sheet wire mesh shall be placed as follows. Support and tie mesh to prevent movement during concrete placement. Support welded wire fabric by high chairs or bolster with baseplates, all plastic supports, and concrete blocks. It is not permissible to place the WWF on the subbase and pulling it up or laying the WWF on top of the concrete and walking it into the concrete. Extend fabric to within 2 inches or the edges of the slab and lap splices at least 1-1/2 courses of the fabric and a minimum of 6 inches. Tie laps and splices securely at ends and at least every 24 inches with 16 gauge annealed steel wire.

I. Reinforcing steel bars shall not be field bent except where shown on the Drawings or specifically authorized in writing by the Engineer. If authorized, bars shall be cold-bent around the standard diameter spool specified in the CRSI. Do not heat bars. Closely inspect the reinforcing steel for breaks. If the reinforcing steel is damaged, replace, Cadweld or otherwise repair as approved by the Engineer. Do

not bend reinforcement after it is embedded in concrete unless specifically shown otherwise on the Drawings.

3.02 REINFORCEMENT AROUND OPENINGS

A. Unless specific additional reinforcement around openings is shown on the Drawings, provide additional reinforcing steel on each side of the opening equivalent to one half of the cross-sectional area of the reinforcing steel interrupted by an opening.. The bars shall have sufficient length to develop bond at each end beyond the opening or penetration.

3.03 SPLICING OF REINFORCEMENT

A Splices designated as compression splices on the Drawings, unless otherwise noted, shall be 30 bar diameters, but not less than 12-in. The lap splice length for column vertical bars shall be based on the bar size in the column above.

B. Tension lap splices shall be provided at all laps in compliance with the applicable tables in the ACI 315. Splices in adjacent bars shall be staggered. Class A splices shall be used when 50 percent or less of the bars are splices within the required lap length. Class B splices shall be used at all other locations.

C. Except as otherwise indicated on the Drawings, splices in circumferential reinforcement in circular walls shall be Class B tension splices and shall be staggered. Adjacent bars shall not be spliced within the required lap length.

D. Install wire fabric in as long lengths as practicable. Splices in welded wire fabric shall be lapped in accordance with the requirements of ACI-318 but not less than 12-in. The splices fabrics shall be tied together with wire ties spaced not more than 24-in on center and laced with wire of the same diameter as the welded wire fabric. Do not position laps midway between supporting beams, or directly over beams of continuous structures. Offset splices in adjacent widths to prevent continuous splices.

3.04 ACCESSORIES

F. The Contractor shall be solely responsible for determining, providing and installing accessories such as chairs, chair bars, and the like in sufficient quantities and strength to adequately support the reinforcement and prevent its displacement during the erection of the reinforcement and the placement of concrete.

E. Use precast concrete blocks where the reinforcing steel is to be supported over soil.

C. Stainless steel bar supports or steel chairs with stainless steel tips shall be used where the chairs are set on forms for a concrete surface that will be exposed to weather, high humidity, or liquid (including bottom of slabs over liquid containing areas). Use of galvanized or plastic tipped metal chairs is permissible in all other locations unless otherwise noted on the Drawings or specified.

D. Alternate methods of supporting top steel in slabs, such as steel channels supported on the bottom steel or vertical reinforcing steel fastened to the bottom and top mats, may be used if approved by the Engineer.

3.05 INSPECTION

A. In no case shall any reinforcing steel be covered with concrete until the installation of the reinforcement, including the size, spacing and position of the reinforcement has been observed by the Engineer and the Engineer's release to proceed with the concreting has been obtained. The Engineer shall be given at least 24 hours advance notice of the readiness of placed reinforcement for observation. The forms shall be kept open until the Engineer has finished his observations of the reinforcing steel.

END OF SECTION

SECTION 03262

CONCRETE JOINTS

PART 1 - GENERAL

1.01 DESCRIPTION

A. Scope of Work: The work included in this section consists of providing all labor, materials and equipment necessary to install expansion joints, construction joints, and waterstops.

B. Related Work Described Elsewhere:

1. Concrete Sidewalks: Section 02509.

2. Concrete Formwork: Section 03100.

3. Concrete Reinforcement: Section 03200.

4. Cast-in-place Concrete: Section 03300.

1.02 SUBMITTALS

A. Materials: Submit manufacturer's literature, materials and samples of waterstops in accordance with Section 01340: Shop Drawings, Working Drawings and Samples including a statement of compliance with ASTM and U.S. Federal Specifications. Manufacturer shall demonstrate five (5) years, minimum, of continuous, successful experience in their product line.

1. Premolded joint fillers: Product data including catalog cut, technical data, storage requirements, installation requirements, location of use, and conformance to ASTM standards.

2. Bonding agents: Product data including catalog cut, technical data, storage requirements, product life, application requirements, and conformance to ASTM standards.

B. Certifications

1. Certification from the manufacturer that all materials used within the joint system are compatible with each other.

1.04 REFERENCE STANDARDS

A. American Society for Testing and Materials (ASTM)

1. ASTM C881 - Epoxy-Resin-Base Bonding Systems for Concrete.

2. ASTM C1059 - Latex Agnets for Bonding Fresh to Hardened Concrete.

3. ASTM D1751 - Preformed Expansion Joint Fillers for Concrete Paving and Structural Construction.

1.05 DELIVERY, STORAGE, AND HANDLING

A. Store all products under tarps to protect from oil, dirt and sunlight.

PART 2 - PRODUCTS

2.01 GENERAL

A. The use of manufacture's name and model or catalog number is for the purpose of establishing the standard of quality and general configuration desired.

B. All materials used together in a given joint (joint fillers, sealants, etc.) shall be compatible with one another. Coordinate selection of suppliers and products to ensure compatibility.

2.02 MATERIALS

A. Premolded Joint Filler

1. Premolded joint filler - sidewalk and roadway concrete pavements. Joints where fiber is specifically noted on the Drawings, shall be asphalt-impregnated fiber board. Joint filler shall conform to ASTM D1751. Thickness shall be 3/4-in unless otherwise shown on the Drawings.

B. Bonding Agent

1. Epoxy bonding agent shall be a two-component, solvent-free, moisture insensitive, epoxy resin material conforming to ASTM C881, Type V.

2. Latex bonding agent shall be a non-re-emulsifiable acrylic-polymer latex conforming to ASTM C1059 Type II.

C. Joint Sealant

1. Joint sealant for continuous immersion shall be a multipart, gray, polyurethane sealant meeting U.S. Federal Specification TT-S-00227E (3) Type I, Class A for horizontal joints and Type II, Class A for vertical joints. Additionally, the sealant must be recommended by the manufacturer for continuous immersion in water.

PART 3 - EXECUTION

3.01 INSTALLATION

A. Construction Joints:

1. Provide construction joints where shown on the Drawings, or as recommended by the Contractor and approved by the Engineer. In case of emergency, place additional construction joints. (An interval of 45 minutes between two consecutive batches of concrete shall constitute cause for an emergency construction joint.)

2. Construction joints shall be keyed, unless otherwise detailed. Form keyways by beveled strips or boards placed at right angles to the direction of shear. Except where otherwise shown on the Drawings or specified, keyways shall be at least 1-1/2 inches in depth over at least 25 percent (25%) of the area of the section.

3. When it is necessary to make a joint because of an emergency, furnish and place reinforcing dowels across the joint. Embed dowels 48 bar diameters each side of the joint. Size and number of dowels shall match reinforcing in the member. Furnishing and placing such reinforcing steel shall be at the Contractor's expenses.

4. After the pour has been completed to the construction joint and the concrete has hardened, thoroughly clean the entire surface of the joint of surface laitance, loose or defective concrete, and foreign material, and expose clean aggregate by sandblasting the surface of construction joints before placing the new concrete. At least two hours before and again shortly before the new concrete is deposited, the joints shall be saturated with water. After glistening water disappears, the joints shall be given a thorough coating of neat cement slurry mixed to the consistency of very heavy paste. The surfaces shall receive a coating at least 1/8-in thick, well scrubbed-in by means of stiff bristle brushes whenever possible. New concrete shall be deposited before the neat cement dries.

B. Expansion Joints:

1. Provide expansion joints of sizes and at locations as shown on the Drawing.

2. Place expansion joint fillers every 30 feet in straight runs of walkways, at right angles turns and wherever concrete butts into vertical surfaces.

C. Bonding at Construction Joints: Before depositing new concrete on or against concrete that has set, thoroughly clean the surfaces of the set concrete so as to expose the coarse aggregate and remove laitance coatings, foreign matter and loose particles. Retighten forms. Dampen, but do not saturate the hardened concrete of joints and then thoroughly cover with a coat of cement grout of similar proportions to the mortar in the concrete. Place the fresh concrete before the grout has attained its initial set.

D. Time Between Pours: At least 2 hours shall elapse after depositing concrete in columns or walls before depositing in beams, girders or slabs supported thereon. Place beams, girders, brackets, column capitals and haunches monolithically as part of the floor or roof system.

E. Joint Sealants: Joint sealants shall be required where indicated on the Drawings. Preparation of surfaces, priming and the handling and preparation of materials shall be in complete compliance with the manufacture's instructions as approved.

END OF SECTION

SECTION 03300

CAST-IN-PLACE CONCRETE

PART 1 - GENERAL

1.01 DESCRIPTION

A. Scope of Work: The Contractor shall furnish all labor and materials required and install cast-in-place concrete complete as shown on the Drawings and as specified herein.

B. Related Work Described Elsewhere:

1. Concrete Formwork: Section 03100.

2. Concrete Reinforcement: Section 03200.

3. Concrete Joints: Section 03262.

1.02 QUALITY ASSURANCE

A. Standards: Unless otherwise indicated, all materials, workmanship and practices shall conform to the requirements of the following standards:

1. American Concrete Institute (ACI)

a. ACI 301 - Specifications for Structural Concrete.

b. ACI 304 - Guide for Measuring, Mixing, Transporting, and Placing Concrete.

c. ACI 305 - Hot Weather Concreting.

d. ACI 306 - Cold Weather Concreting.

e. ACI 308 - Standard Practice for Curing Concrete.

f. ACI 309 - Guide for Consolidation of Concrete.

g. ACI 318 - Building Code Requirements for Reinforced Concrete.

h. ACI 347 - Guide for Concrete Formwork.

i. ACI 350 - Environmental Engineering Concrete Structures.

2. American Society for Testing and Materials (ASTM)

   a. ASTM C31 - Making and Curing Concrete Test Specimens in the Field.

   b. ASTM C33 - Concrete Aggregates.

   c. ASTM C39 - Compressive Strength of Cylindrical Concrete Specimens.

   d. ASTM C42 - Obtaining and Testing Drilled Cores and Sawed Beams of Concrete.

   e. ASTM C94 - Standard Specification for Ready-mix Concrete.

   f. ASTM C143 - Slump for Portland Cement Concrete.

   g. ASTM C150 - Standard Specification for Portland Cement.

   h. ASTM C171 - Standard Specification for Sheet Materials for Curing Concrete.

   i. ASTM C173 - Air Content of Freshly Mixed Concrete by the Volumetric Method.

   j. ASTM C231 - Air Content of Freshly Mixed Concrete by the Pressure Method.

   k. ASTM C260 - Air Entraining Admixtures for Concrete.

   l. ASTM C309 - Liquid Membrane-Forming Compounds for Curing Concrete.

   m. ASTM C494 - Chemical Admixtures for Concrete.

   n. ASTM C618 - Fly Ash and Raw or Calcined Natural Pozzolan for Use as a Mineral Admixture in Portland Cement Concrete.

3. Building Codes

   a. Standard Building Code (SBCCI).

   b. Local Codes and Regulations.

B. Plant Qualification: Plant equipment and facilities shall meet all requirements of the Check List for Certification of Ready Mixed Concrete Production Facilities of the National Ready Mixed Concrete Association and ASTM C-94.

1.03 SUBMITTALS

A. Materials and Shop Drawings: The following information shall be submitted for approval in accordance with Section 01340: Shop Drawings, Working Drawings and Samples. No concrete shall be furnished until submittal has been approved.

1. Plant Qualification: Satisfactory evidence shall be submitted indicating compliance with the specified qualification requirements.

2. Materials: Satisfactory evidence shall be submitted indicating that materials to be used, including cement, aggregates and admixtures meet the specified requirements. Provide catalog data, chemical and mechanical analysis, and conformance with ASTM requirements.

a. Sources of cement, pozzolan and aggregates.

b. Air-entraining admixture.

c. Water reducing admixture.

d. High range water-reducing admixture (plasticizer).

e. Sheet curing material.

f. Liquid curing compound.

3. Design Mix: The design mix to be used shall be prepared by qualified persons and submitted for approval. The design of the mix is the responsibility of the Contractor subject to the limitations of the Specifications. Approval of this submission will be required only as minimum requirements of the Specifications have been met. Such approval will in no way alter the responsibility of the Contractor to furnish concrete meeting the requirements of the Specifications relative to strength and slump.

4. Ready Mix Concrete: Provide delivery tickets or weighmasters certificate per ASTM C-94, including weights of cement and each size aggregate, amount of water in the aggregate, and amount of water added at the plant. Write in the amount of water added on the job.

PART 2 - PRODUCTS

2.01 MATERIALS

A. Cement

1. Cement for all concrete shall be domestic Portland cement that conforms to the requirements of ASTM Designation C-150 Type I or Type II. Cement for high early strength concrete shall be used only for special locations and only with the approval of the Engineer. Type I cement may be used for buildings and tremie concrete.

2. Only one (1) brand of cement shall be used in any individual structure unless approved by the Engineer. Cement which has become damaged, partially set, lumpy or caked shall not be used and the entire contents of the sack or container which contains such cement will be rejected. No salvaged or reclaimed cement shall be used.

B. Pozzolan

1. Fly ash shall be Class C or F conforming to the requirements of ASTM C618, including the requirements of Table 1 except the loss of ignition, LOI, shall be limited to 3% maximum. Fly ash shall not exceed 20% of the cementitious content of the mix.

C. Aggregates

1. ASTM C-33. Coarse aggregates shall be size No. 57 (1 inch). Block cell fill shall be size #8.

D. Water: Clean and free from injurious amounts of deleterious materials.

E. Air Entraining Admixture: ASTM C-260.

F. Water Reducing and Retarding Admixtures:

1. For concrete without superplasticizer: ASTM C-494, Type D, and shall contain no calcium chloride by weight of cement.

G. Curing Compound: ASTM C-309, Type 1. The compound shall contain no ingredient which will adversely affect the bond of coatings or toppings. Curing compound shall be approved for use in contact with potable water after 30 days.

1. Curing compound for exposed concrete not to receive special finishes, protective coatings and/or concrete toppings shall be "Super Rez-Seal", as manufactured by Euclid Chemical Co., Cleveland, Ohio or equal.

2. Curing compound for exposed concrete to receive special finishes, protective coatings and/or concrete toppings shall be "Kurez-DR", as manufactured by Euclic Chemical Co., Cleveland, Ohio or equal.

H. Mortar for Repair of Concrete: Mortar used for repair of concrete shall be made of the same materials as used for concrete, except that the coarse aggregate shall be omitted and the mortar shall consist of not more than one (1) part cement to two and one-half (2-1/2) parts sand by damp loose volume. The quantity of mixing water shall be no more than necessary for handling and placing.

I. Burlap Mats: Conform to AASHTO Specification M-182.

J. Epoxy Bonding Agent: Sikadur 32 Hi Mod, or equal.

2.02 MIXES

A. General Requirements:

1. Mix Design: Proportioning shall be on the basis of field experience and/or trial mixtures as specified in ACI-318, Section 4.3. Data on consecutive compression tests and standard deviation shall be submitted. Proportioning for small structures may be by the water/cement ratio under special approval by the Engineer. Concrete mix design shall comply with the Standard Building Code requirements.

2. Air Content: Range 3.5 to 6% for Class A and B.

3. Slump: 4 inches plus or minus 1 inch for Class A and B.

6 inches plus or minus 1 inch for tremie concrete.

4. Water cement ratio = 0.45 (Class A Concrete)

= 0.55 (Class B Concrete)

5. Minimum Compressive Strength at 28 days:

a. Class A, 4,000 psi: Columns, walls, elevated slabs including footings, tanks, ditches, pumping station, tremie concrete and other concrete in contact with treated waters.

b. Class B, 3,000 psi: Slabs and mats on grade, masonry fillcell grout, encasements, thrust blocks, and pipe supports, concrete curbs, fills and sidewalks, etc. not in contact with treated waters.

B. Production of Concrete:

1. General: Concrete shall be ready mixed and shall be batched, mixed and transported in accordance with ASTM C-94, except as otherwise indicated.

2. Air Entraining Admixture: Air entraining admixture shall be charged into the mixture as a solution and shall be measured by means of an approved mechanical dispensing device. The liquid shall be considered a part of the mixing water.

3. Water Reducing and Retarding Admixture: Water reducing and retarding admixture shall be added and measured as recommended by the manufacturer. The addition of the admixture shall be separate from the air entraining admixture. The addition of the admixture shall be completed within one minute after addition of water to the cement has been completed, or prior to the beginning of the last three-quarters of the required mixing, whichever occurs first. Admixtures shall be stored, handled and batched in accordance with the recommendation of ASTM C-94.

C. Delivery Tickets: In addition to the information required by ASTM C-94, delivery tickets shall indicate the cement content and the water/cement ratio.

D. Temperatures: The temperature of the concrete upon delivery from the truck shall not exceed 95 degrees Fahrenheit (°F), otherwise ice shall be used to reduce the temperature of the concrete as recommended by ACI.

E. Modifications To The Mix: No modifications to the mix shall be made in the plant or on the job which will decrease the cement content or increase the water-cement ratio beyond that specified. No modifications of any kind shall be made except by a qualified and responsible representative of the concrete producer.

1. Any addition of water must be approved by the Engineer. Added water shall be incorporated by additional mixing of at least 35 revolutions. All added water shall be metered and the amount of water added shall be shown on each delivery ticket. Addition of water shall follow procedures of ASTM C-94 for slump adjustment.

PART 3 - EXECUTION

3.01 PREPARATION

A. Preparations Before Placing: No concrete shall be placed until the approval of the Engineer has been received. Approval will not be granted until forms are thoroughly clean, and reinforcing and all other items required to be set in concrete

have been placed and thoroughly secured. The Engineer shall be notified a minimum of 24 hours before concrete is placed.

B. Conveying:

1. General: Concrete shall be handled from the truck to the place of final deposit as rapidly as practicable by methods which will prevent segregation or loss of ingredients to maintain the quality of the concrete. No concrete shall be placed more than 90 minutes after mixing has begun for that particular batch.

2. Buckets and Hoppers: Buckets and hoppers shall have discharge gates with a clear opening equal to no less than one-third of the maximum interior horizontal area, or five (5) times the maximum aggregate size being used. Side slopes shall be no less than 60 degrees. Controls on gates shall permit opening and closing during the discharge cycle. It is suggested the Contractor provide one (1) standby bucket and hopper for use in case of equipment failure.

3. Runways: Extreme care shall be exercised to avoid displacement of reinforcing during the placing of concrete.

4. Elephant Trunks: Hoppers and elephant trunks shall be used to prevent the free fall of concrete for more than 6 feet.

5. Chutes: Chutes shall be metal or metal lined, and shall have a slope not exceeding one vertical to two horizontal, and not less than one vertical to three horizontal. Chutes more than 20 feet long and chutes not meeting the slope requirements, may be used only if they discharge into a hopper before distribution.

6. Pumping Equipment: Pumping equipment and procedures, if used, shall conform to the recommendations contained in the report of ACI Committee 304 on "Placing Concrete by Pumping Methods", ACI 304.2R. The specified slump shall be measured at the point of discharge. The loss of slump in pumping shall not exceed 1-1/2 inches.

7. Conveying Equipment Construction: Aluminum or aluminum alloy pipe for tremies or pump lines and chutes, except for short lengths at the truck mixer shall not be permitted.

8. Cleaning: Conveying equipment shall be cleaned at the end of each concrete operation.

3.02 APPLICATION

A. Placing:

1. General: Concrete shall be deposited continuously, or in layer of such thickness (not exceeding 2 feet in depth) that no concrete will be deposited on concrete that has hardened sufficiently to cause the formation of seams or planes of weakness.

2. Supported Elements: At least 2 hours shall elapse after depositing concrete in columns or walls before depositing in beams, girders, or slabs supported thereon.

3. Segregation: Concrete shall be deposited as nearly as practicable in its final position to avoid segregation due to rehandling or flowing. Concrete shall not be subjected to procedures which will cause segregation.

4. Concrete Under Water: All concrete, except that indicated on the Drawings as Tremie concrete, shall be placed in the dry.

5. Concrete Fill and Tank Bottom Slab: Concrete fill for the tank bottoms, where shown on Drawings, shall be placed within the tolerances described in this Section and as per equipment manufacturer's recommendations.

B. Seals and Tremie Concrete:

1. General:

a. Wherever practicable, all foundation excavations shall be dewatered and the concrete deposited in the dry. Where conditions are encountered which render it impracticable to dewater the foundation before placing concrete, a concrete foundation seal shall be placed. The foundation shall then be dewatered, and the balance of the concrete placed in the dry.

b. When seal concrete is required to be placed, the satisfactory performance of the seal in providing a watertight excavation for placing structural concrete shall be the responsibility of the Contractor. Seal concrete placed by the Contractor, which subsequently fails to perform properly, shall be repaired as necessary to perform its required function, at the expense of the Contractor.

2. Method of Placing: Concrete deposited under water shall be carefully placed in the space in which it is to remain by means of a tremie, a closed-bottom dump bucket of not less than one cubic yard capacity, or other

approved method, and shall not be disturbed after it is deposited. All seal concrete shall be deposited in one (1) continuous pour. No concrete shall be placed in running water. All form work designed to retain concrete under water shall be watertight, and the design of the form work and excavation sheeting shall be by a Professional Engineer, registered in the State of Florida.

3. Use of Tremie: The tremie shall consist of a tube having a minimum inside diameter of 10 inches, and shall be constructed in sections having tight joints. No aluminum parts which have contact with the concrete will be permitted. The discharge end shall be entirely seated at all times and the tremie tube kept full to the bottom of the hopper. When a batch is dumped into the hopper the tremie shall be slightly raised (but not out of the concrete at the bottom) until the batch discharges to the bottom of the hopper, after which the flow shall be stopped by lowering the tremie. The means of supporting the tremie shall be such as to permit the free movement of the discharge end over the entire top surface of the work, and shall permit it being lowered rapidly when necessary to choke off or retard the flow. The flow shall preferably be continuous and in no case shall be interrupted until the work is completed. Special care shall be exercised to maintain still water at the point of deposit.

4. Use of Bottom-dump Bucket: When the concrete is placed by means of a bottom-dump bucket, the bucket shall be lowered gradually and carefully until it rests upon the concrete already placed. The bucket shall then be raised very slowly during the discharge travel; the intent being to maintain, as nearly as possible, still water at the point of discharge and to avoid agitating the mixture. Aluminum buckets will not be permitted.

5. Time of Beginning Pumping: Pumping to dewater a sealed cofferdam shall not commence until the seal has set sufficiently to withstand the hydrostatic pressure, and in no case earlier than 72 hours after placement of the concrete.

C. Consolidating Concrete:

1. General: Concrete, with the exception of slabs less than 8 inches thick, shall be consolidated by means of internal vibrators operated by competent workmen.

a. Concrete Slabs: Concrete for slabs less than 8 inches shall b consolidate with vibrating screeds: slabs 8-inches to 12-inches thick shall be compacted with internal vibrators and (optionally) with vibrating screeds. Vibrators shall always to placed into concrete vertically and shall not be laid horizontally or laid over.

2. Vibrators: Vibrators shall have a minimum head diameter of at least 2 inches, a minimum centrifugal force of 700 and a minimum frequency of 8,000 vibrations per minute.

3. Vibrators for Confined Areas: In confined areas, the specified vibrators shall be supplemented by others having a minimum head diameter of 1-1/2 inches, a minimum centrifugal force of 300 pounds and a minimum frequency of 9,000 vibrations per minute.

4. Spare Vibrator: One (1) spare vibrator for each three (3) in use shall be kept on the site during all concrete placing operations.

5. Use of Vibrators: Vibrators shall be inserted and withdrawn at points approximately 18 inches apart. The duration of each insertion shall be from 5 to 15 seconds. Concrete shall not be transported in the forms by means of vibrators.

D. Protection: Rainwater shall not be allowed to increase the mixing water, nor to damage the surface finish. Concrete shall be protected from construction overloads. Design loads shall not be applied until the specified strength has been attained.

E. Construction Joints: Except as otherwise indicated on the Drawings, horizontal construction joints shall be provided at top of foundation members and slabs on grade and at the soffit of supported slabs and beams. Other horizontal and vertical construction joints shall be located as indicated on the Drawings. Joints will not be permitted except in the locations shown, unless recommended by the Contractor and approved by the Engineer.

F. Bonding: Before depositing new concrete on or against concrete that has set, the surfaces of the set concrete shall be thoroughly cleaned so as to expose the coarse aggregate and be free of laitance, coating, foreign matter and loose particles. Forms shall be retightened. The hardened concrete of joints shall be dampened, but not saturated, and then thoroughly covered with a coat of cement grout of similar proportions to the mortar in the concrete. The grout shall be as thick as possible on vertical surfaces and at least 1/2 inches thick on horizontal surfaces. The fresh concrete shall be placed before the grout has attained its initial set.

G. Embedded Items: In addition to steel reinforcement, pipes, inserts and other metal objects as shown, specified or ordered shall be built into, set in or attached to the concrete. All necessary precautions shall be taken to prevent these objects from being displaced, broken or deformed. Before concrete is placed, care shall be taken to determine that all embedded parts are firmly and securely fastened in place as indicated. They shall be thoroughly clean and free from paint or other coating, rust, scale, oil, or any foreign matter. No wood shall be embedded in concrete. The concrete shall be packed tightly around pipes and other metal work

to prevent leakage and to secure proper adhesion. Drains shall be adequately protected from intrusion of concrete.

H. Concrete Finishes: Complete concrete surfaces in accordance with the following schedule:

1.

Finish Designation	Area Applied
F-1	Exterior walls below grade not exposed to water. Repair defective concrete, fill depressions deeper than 1/2 inch and fill tie holes.
F-2	Exterior and interior walls of all structures. Repair defective concrete, remove fins, fill depressions and fill tie holes.
F-3	Walls of all structures or buildings exposed to public view and the underside of formed floors or slabs that will not be finish coated or sealed. In addition to Finish F-2, fill depressions and airholes with mortar. Dampen surfaces and then spread a slurry within 72 hours of removing forms consisting of one part cement and one and one-half parts sand by volume on the surface with clean burlap pads or sponge rubber floats. Remove any surplus by scraping and then rubbing with clean burlap.
E-1	Exposed edges of slabs, floors and tops of walls. Finish with a 1/4 inch radius edge if a chamfer is not indicated.
E-2	Tops of walls, beams and similar unformed surfaces occurring adjacent to formed surfaces shall be struck smooth after concrete is placed and shall be floated to a texture reasonably consistent with that of formed surfaces.

2. General: As soon as forms can safely be removed, all irregular projections shall be chipped off flush with the concrete surfaces. All voids produced by spacers or any honeycombing shall be pointed up with grout and troweled flush with the concrete surface immediately after removal of forms and water cured to prevent shrinkage. Honeycombing shall be cut out to expose a sound concrete surface prior to pointing. The use of mortar pointing or patching shall be confined to the repair of small defects in relatively green concrete. Where in the opinion of the Engineer substantial repairs are required, the defective concrete shall be cut out to sound concrete and repaired with gunite or the concrete shall be removed and reconstructed as directed.

3. All concrete slabs to be troweled shall receive a floated finish. After floating, all concrete slabs except as otherwise indicated and in areas to receive roofing, insulation, tile or topping shall be troweled and immediately light broom finished. Stair treads shall receive a light broomed finish.

4. Floated Finish: After concrete has been placed. Consolidated, struck off and leveled, it shall not be worked further until water sheen has disappeared and the surface has hardened sufficiently to permit floating, the planeness of the slab shall be checked with a 10 foot straightedge applied at no less than two (2) angles. All high spots shall be cut down and all low spots shall be filled to produce a surface having a Class B Tolerance throughout. The slab shall then be refloated to a uniform sandy texture.

5. Light Broomed Finish: After floating, slabs to receive a light broomed finish shall be power troweled and finished struck with a soft broom rag. The troweling shall produce a smooth surface, relatively free of defects and a Class B Tolerance. Before the surface sets, the soft broom drag shall be passed over the surface to produce a surface uniform in texture and appearance.

6. Troweled Finish: After floating, slabs to receive a troweled finish shall be power troweled and finally hand troweled. The first troweling after power floating shall produce a smooth surface, relatively free of defects. Surfaces shall be hand troweled after the surface has hardened sufficiently. The final troweling shall be done by hand when a ringing sound is produced as the trowel is moved over the surfaces. Hand troweling shall produce a surface which is thoroughly consolidated, free from trowel marks, uniform in texture and appearance and plane to a Class B tolerance.

7. Finishing Tolerance: Surfaces shall be true planes within the following limits:

   a. Class B: 1/4 inch in 10 feet is determined by a 10 foot straightedge placed anywhere on the slab in any direction.

I. Saw cut Joints: Joints that are to be saw cut shall be cut not sooner than 2 hours after the concrete is poured and not later than 8 hours after the pour.

3.03 PROTECTING

A. Curing:

1. All exposed surfaces, including slabs, walls, beams and columns shall receive a spray coat of curing compound applied in accordance with the manufacturer's recommendations. Exposed steel keyways and other embedded items shall be protected from the curing compound. Concrete surfaces for water retaining structures and/or to be coated with an epoxy system, shall be cured by the wet burlap method.

2. Curing compound shall be uniformly applied to the surfaces to be cured, in a single coat, continuous film by a mechanical sprayer. Application shall be in compliance with the manufacturer's recommendations.

3. Curing compound shall be applied in accordance with manufacturer's instructions. Should the film become damaged from any cause within the repaired curing period, the damaged portions shall be required immediately with additional compound. Upon removal of forms, the newly exposed surfaces shall immediately be coated to provide a curing treatment equal to that provided for the surface.

B. Wet Burlap Curing Method: All concrete for water retaining structures to be cured by the wet burlap method. All concrete shall be covered with a double thickness of burlap, cotton mats, or other approved material kept thoroughly saturated with water. The forms shall be kept wet until removed and upon removal, the curing specified herein shall be started immediately. Concrete shall be cured for a period of 7 days for normal Portland cement or 4 days for high early strength cement. Concrete poured in the dry shall not be submerged until it has attained sufficient strength to adequately sustain the stress involved nor shall it be subjected to flowing water across its surface until it has cured 4 days. Curing the gunite shall be started as soon as possible without damaging surface and not later than 2 hours after placing. Begin wet cure as soon as concrete attains an initial set and maintain wet cure 24 hours a day.

C. Sheet Material Curing: Cover entire surface with sheet material. Securely anchor sheeting to prevent wind and air from lifting the sheeting or entrapping air under the sheet. Place and secure sheet as soon as initial concrete set occurs.

3.04 REMOVAL OF FORMS

A. Except as otherwise specifically authorized by the Engineer, forms shall not be removed before the concrete has attained a strength of at least 70 percent of the 28 day compressive strength prescribed by the design, nor before reaching the following number of day-degrees of curing (whichever is the longer):

TABLE 4

Forms for	Degree Days
Beams and slabs	500
Walls and vertical surfaces	100

B. Shores shall not be removed until the concrete has attained at least 60 percent of the specified strength and also sufficient strength to support safely its own weight and the construction live loads upon it.

3.05 TESTING

A. A testing laboratory employed by the Contractor will make such tests required.

B. Standard laboratory compressive test cylinders will be obtained by the laboratory when concrete is discharged at the point placing (i.e., discharge end of pumping equipment), and cylinders will be made and cured in accordance with the requirements of ASTM Designation C-31. A set of five (5) cylinders will be obtained for each 50 cubic yards, or fraction thereof placed each day, nor less than once for each 5,000 sq. ft. or surface area of slabs or walls for each type of concrete. The cylinders will be cured under laboratory conditions and will be tested in two groups of two (2) at 7 and 28 days of age, with one (1) group held until released by the Engineer in accordance with the requirements of ASTM Designation C-39.

C. The laboratory will conduct tests of Class A and Class B concrete as it is discharged from the mixer at the point of placing. Slump tests will be made for each truckload of concrete. Slump tests may be made on any batch, and failure to meet specified slump requirements will be sufficient cause for rejection of the batch. If water is added after initial test then the "load" shall be tested.

D. Air content of the concrete mixture will be tested on every other truck in accordance with ASTM C173 or ASTM C231.

E. Historical strength/break data may be submitted with mix design and may be used in the approval process provided the mix design is otherwise acceptable. If the mix design required modifications, a test batch may still be required.

3.06 FIELD CONTROL

A. The Contractor shall advise the Engineer of his readiness to proceed at least twenty four (24) working hours prior to each concrete placement. The Engineer will inspect the preparations for concreting including the preparation of previously placed concrete, the reinforcing and the alignment and tightness of formwork. No placement shall be made without the prior approval of the Engineer.

1. The Contractor's Superintendent shall submit a certification that indicates preparedness to place concrete and is in accord with contract drawings and specifications. This certification shall be submitted on forms provided by the Engineer.

B. The Engineer may have cores taken from any questionable area in the concrete work such as construction joints and other locations as required for determination of concrete quality. The results of test on such cores shall be the basis for acceptance, rejection or determining the continuation of concrete work.

C. The Contractor shall cooperate in obtaining cores by allowing free access to the Work and permitting the use of ladders, scaffolding and such incidental equipment as may be required. The Contractor shall repair all core holes. The work of cutting and testing the cores will be at the expense of the Owner.

3.07 FAILURE TO MEET REQUIREMENTS

A. Should the strengths shown by the test specimens made and testing in compliance with the previous provisions fall below the values given in Section 2.02.A.5, the Engineer shall have the right to require changes in proportions outlined to apply on the remainder of the Work. Furthermore, the Engineer shall have the right to require additional curing on those portions of the structure represented by the test specimens which failed. The cost of such additional curing shall be at the Contractor's expense. In the event that such additional curing does not give the strength required, as evidenced by core and/or load tests, the Engineer shall have the right to require strengthening or replacement of those portions of the structure which fail to develop the required strength. The cost of all such core borings and/or load tests and any strengthening or concrete replacement required because strengths of test specimens are below that specified, shall be entirely at the expense of the Contractor. In cases of failure to meet strength requirements the Contractor shall adjust the concrete mix to meet contract requirements.

B. When the tests on control specimens of concrete fall below the required strength, the Engineer will permit check tests for strengths to be made by means of typical cores drilled from the structure in compliance with ASTM C42 and C39. In case of failure of the core, the Engineer, in addition to other recourses, may require, at the Contractor's expense, load tests on any one of the slabs, beams, piles, caps, and columns in which such concrete was used. Test need not be made until concrete has aged 60 days.

C. Should the strength of test cylinders fall below 85 percent of the required minimum 28 day strength, the concrete shall be rejected and shall be removed and replaced.

3.08 PATCHING

A. As soon as the forms have been stripped and the concrete surfaces exposed, fins and other projections shall be removed, recesses left by the removal of form ties shall be filled, and surface defect which do not impair structural strength shall be repaired. Clean all exposed concrete surfaces and adjoining work stained by leakage of concrete, to approval of the Engineer.

B. Immediately after removal of forms remove plugs and break off metal ties as required by Section 03100-Concrete Formwork. Holes are then to be promptly filled upon stripping as follows: Moisten the hole with water, followed by a 1/16-inch brush coat of neat cement slurry mixed to the consistency of a heavy paste. Immediately plug the hole with a 1 to 1.5 mixture of cement and concrete sand mixed slightly damp to the touch. Compact the grout into the hole until dense and an excess of paste appears on the surface. Trowel smooth with heavy pressure. Avoid burnishing.

C. When patching exposed surfaces the same source of cement and sand as used in the parent concrete shall be employed. Adjust color if necessary by addition of proper amounts of white cement. Rub lightly with a fine Carborundum stone at an age of one to five days if necessary to bring the surface down to the adjacent concrete. Exercise care to avoid damaging or staining the surrounding concrete. Wash thoroughly to remove all rubbed matter.

3.09 REPAIRS

A. It is the intent of these Specifications to require quality work including adequate forming, proper mixture and placement of concrete and curing so completed concrete surfaces will not require patching.

B. Defective concrete and honeycombed areas as determined by the Engineer shall be repaired as specified.

1. General: Surface defects, including tie holes shall be repaired immediately after form removal. The areas to be patched and an area at least 6 inches wide surrounding it shall be dampened to prevent absorption of water from the patching mortar. The Engineer shall be notified prior to commencing operations.

2. Removal of Defective Concrete: All honeycombed and other defective concrete shall be removed down to sound concrete. Edges shall be cut perpendicular to the surface or slightly under cut. Sand blast surfaces to receive repair.

3. Bonding Grout: Surfaces to be patched shall be thoroughly dampened and shall receive a coat of bonding grout brushed into the surface. Grout shall

consist of one part cement to one part fine sand passing a No. 30 sieve. Grout shall be the consistency of thick cream.

4. Placing Patching Mortar: After the bonding grout begins to lose its water sheen, a premixed patching mortar shall be applied. Patching mortar shall be thoroughly consolidated into place and stuck off so as to leave the patch slightly higher than the surrounding surface. It shall be left undisturbed for one hour to permit initial shrinkage and then finally finished.

5. Tie Holes: After being cleaned and thoroughly dampened, the tie holes shall be filled solid with patching mortar.

3.10 MISCELLANEOUS WORK

A. All bolts, anchors, miscellaneous metals or other sleeves and steel work required to be set in the concrete forms for attachment of masonry, structural, and mechanical equipment shall be set or installed under this Section. The Contractor shall be fully responsible for the setting of such materials in the forms and shall correct all such not installed in a proper location or manner at his own expense. Contractor shall coordinate the activities of other trades for installation of these items.

B. Electric conduits shall be installed in the concrete as required by the Drawings and specified elsewhere in these Specifications. Outlet boxes and fixtures shall be located in reference to the final floor, wall or ceiling finish and shall be as secured that they will not be displaced by concrete placing.

C. Pipes or conduits for embedment, other than those merely passing through shall not be larger in outside diameter than one-third the thickness of the slab, wall, or beam in which they are embedded, unless indicated on the Drawings, nor shall they be spaced closer than three (3) diameters on center, nor so located as to unduly impair the strength of the construction. The Engineer shall approve the location of all conduits and fixtures.

D. Concrete foundations, supports and bases for all equipment and machinery shall be built to the equipment manufacturer's requirements, as approved by the Engineer, with anchor bolts installed.

END OF SECTION

SECTION 03410

PRECAST CONCRETE STRUCTURES

PART 1 - GENERAL

1.01 DESCRIPTION

A. Scope of Work:

1. The contractor shall furnish all materials, labor and equipment and construct manholes and pump stations, as shown on the Drawings and as specified herein.

2. The manholes and pump stations shall have an invert channel shaped to correspond with the lower half of the pipe. The top of the shelf shall be at the elevation indicated and shall be sloped to drain towards the flowing-through channel. Every effort shall be made by the Contractor to construct watertight structures.

3. The forms, dimensions, concrete, and construction methods shall be approved by the Engineer in advance of construction.

B. Related Work Described Elsewhere:

1. Trenching, Backfilling and Compacting: Section 02221.

2. Cast-in Place Concrete: Section 03300.

1.02 SUBMITTALS

A. Submit to the Engineer, as provided in the General Conditions and Section 01340, Shop Drawings showing details of construction, reinforcing and joints.

1.03 INSPECTION

A. The quality of all materials, the process of manufacture, and the finished sections shall be subject to inspection and approval by the Construction Manager, or other representatives of the Owner. Such inspection may be made at the place of manufacture, at the site after delivery, or at both places, and the sections shall be subject to rejection at any time on account of failure to meet any of the Specification requirements; even though sample sections may have been accepted as satisfactory at the place of manufacture. Sections rejected after delivery to the job shall be marked for identification and shall be removed from the job at once.

All sections which have been damaged after delivery will be rejected, and if already installed, shall be acceptably repaired, if permitted, or removed and replaced, entirely at the Contractor's expense.

B. At the time of inspection, the sections will be carefully examined for compliance with the ASTM designation specified below and these Specifications, and with the approved manufacturer's drawings. All sections shall be inspected for general appearance, dimension, "scratch-strength", blisters, cracks, roughness, soundness, etc. The surface shall be dense and close-textured.

C. Imperfections may be repaired, subject to the approval of the Engineer, after demonstration by the manufacturer that strong and permanent repairs result. Repairs shall be carefully inspected before final approval. Cement mortar used for repairs shall have a minimum compressive strength of 4,000 psi at the end of 7 days and 5,000 psi at the end of 28 days, when tested in 3-inch by 6-inch cylinders stored in the standard manner. Epoxy mortar may be utilized for repairs subject to the approval of the Engineer.

PART 2 - PRODUCT

2.01 PRECAST CONCRETE SECTIONS

A. Precast concrete manhole barrel and eccentric top sections shall conform to Specifications for precast Reinforced Concrete Manhole Sections, ASTM Designation C478, except as otherwise specified below. The method of construction shall conform to the detailed Drawings appended to these specifications and the following additional requirements:

1. The minimum wall thickness for the various size barrel sections shall be 6" or 8" in accordance with FDOT index No. 200 of the Roadway and Traffic Design Standards.

2. Barrel sections shall have tongue and groove joints. Joints shall have performed gaskets set in specially provided indentations. The performed gaskets shall conform to AASHTO M-198 75 I, Type B.

3. Type II cement shall be used except as otherwise approved.

4. The date of manufacture and the name or trademark of the manufacturer shall be clearly marked on the inside of each precast section. Each section of the manhole must be inspected and stamped by an accredited testing laboratory.

5. Sections shall be cured by an approved method for at least 28 days prior to painting and shall not be shipped until at least 2 days after having been painted.

6. Top sections shall be eccentric except that precast concrete slabs shall be used where cover over the top of the pipe is less than 4 feet for all manholes.

7. Precast concrete slabs over top section, where required, shall be capable of supporting the overburden plus a live load equivalent to AASHTO H-20 loading.

8. The tops of bases shall be suitably shaped to mate with the precast barrel section.

9. The exterior and interior of the manhole shall be coated as noted in the Standard Details of the plans.

B. Precast electrical handholes and covers shall be as specified and as shown on the Drawings.

C. Precast leveling rings for setting cast iron frames over manholes shall be 2 inches

PART 3 - EXECUTION

3.01 INSTALLATION

A. Manholes and other precast structures shall be constructed to the dimensions as shown in the Drawings and as specified in these Specifications.

B. The base shall be cast-in-place concrete (as specified in Division 3), placed on a thoroughly compacted gravel sub-base. The tops of the cast-in-place bases shall be shaped to mate with the precast barrel section, and shall be adjusted in grade so that the top of the dome section is approximately at the correct elevation.

C. Pre-cast bases, conforming to all requirements of ASTM C478 and above listed requirements for precast sections, may be used.

D. Pre-cast concrete structure sections shall be set so as to be vertical and with sections in true alignment with a 1/4-inch maximum tolerance to be allowed. Joints shall receive one coat of primer as per gasket manufacturer's specifications to clean the dry joint surfaces. The plastic gasket strips shall be applied end-to-end to form a continuous gasket around the entire circumference of the manhole joint. The strips shall be placed in such a manner to prevent any stretching, and to assure a slight squeeze-out inside and outside of the joint when the upper manhole is set in place. Backfilling shall be done in a careful manner, bringing the fill up evenly on all sides. If leaks appear in the structures, the inside joints shall be caulked with lead wool to the satisfaction of the Engineer. The Contractor shall install the precast sections in a manner that will result in a watertight joint.

E. Holes in the concrete manhole sections required for handling, or other purposes, shall be plugged with a non-shrinking grout or by grout in combination with concrete plugs.

F. Where holes may be cut in the precast sections to accommodate pipes, cutting shall be done prior to setting them in place to prevent any subsequent jarring which may loosen the mortar joints.

G. Cast iron frames and covers shall be furnished and installed as per FDOT latest Standard Specifications and Roadway & Traffic Design Standards, unless otherwise noted on the Construction Plans.

END OF SECTION

SECTION 03600

GROUTING

PART 1 - GENERAL

1.01 DESCRIPTION

A. Scope of Work: The scope of work involves the grouting of the space left void in the abandonment of the existing pipelines and structures. The work consists of furnishing all labor, equipment and materials and performing all work connected with the placement of the cementaceous grout to fill the void.

1.02 QUALITY ASSURANCE

A. Grouting shall be performed by a crew under the direct supervision of a superintendent that has experience in grouting of this nature.

B. Storage, mixing, handling and placement shall be in accordance with manufacturers instructions and specifications.

1.03 SUBMITTALS

A. Shop Drawings: Shop drawings shall be submitted in accordance with Division 1. In addition, the following shall be submitted to the Engineer for acceptance prior to construction.

1. A detailed description of equipment and operational procedures to accomplish the grouting operation, including grout mixture design, grout mixer type, grout samples, and test data.

2. A detailed description of the grouting time schedule.

PART 2 - PRODUCTS

2.01 GROUT MATERIAL

A. The grout shall be a "flowable fill" consisting of a mixture of Type 1 Portland Cement, Type "F" Flyash (ASTM 618), sand and water.

B. The mixture shall contain a minimum of 50 pounds cement and minimum of 400 pounds flyash per cubic yard of grout.

2.02 EQUIPMENT

A. All grout shall be mixed with a high shear, high energy colloidal type mixer to achieve the best uniform density.

B. The grout shall be pumped with a non-pulsating centrifugal or tri-plex pump.

C. The mixer shall be capable of continuous mixing. Batch mixing shall not be permitted.

PART 3 - EXECUTION

3.01 GROUTING

A. Grouting of the annular space due to the abandonment of the existing sewer pipe will be allowed in continuous individually bulkheaded segments of up to 300 linear feet.

B. Grout shall be placed in a maximum of three stages, with the initial stage volume equal to or greater than 50% of the total volume for that section of pipe being grouted. The maximum time wait between grouting stages shall be 24 hours.

C. For each stage, mix and pump the material in one continuous process so as to avoid partial setting of some grout material during that stage, thus, eliminating voids and possible subsequent surface damage due to "cave-ins".

D. Each section shall be grouted by injecting grout from the lowest point and allowing it to flow toward the highest point to displace water from the annulus and assure complete void-free coverage. Grout shall be placed through tubes installed in the bulkheads at the insertion pits or manholes. Grout tubes shall be at least 2-inch nominal diameter.

E. After the ends of each section of pipe are exposed, the entire space, not to exceed 300 linear feet end to end, shall be sealed by controlled pumping of grout until it flows from the pipe at the opposite end of the grouting. **Grouting shall be carried out until the entire space is filled.**

F. Grout pressure in the void space is not to exceed five (5) psi above maximum hydrostatic groundwater level. An open ended, highpoint tap or equivalent vent must be provided and monitored at the bulkhead opposite to the bulkhead through which grout is injected. This bulkhead will be blocked closed as grout escapes to allow the pressuring of the annular space.

3.02 FIELD QUALITY CONTROL

A. The quality of the grout, application of the equipment and installation techniques are the responsibility of the Contractor. The review and acceptance or approval of specific mix design, equipment or installation procedures shall in no way relieve the Contractor of his obligation to provide the final product as specified herein.

END OF SECTION

SECTION 03612

REINFORCED CONCRETE PIPE AND FITTINGS

PART 1 - GENERAL

1.01 DESCRIPTION

A. Scope of Work: Furnish and install reinforced concrete pipe and fittings of the type(s) and size(s) and in the location(s) shown on the Drawings and as specified herein.

1.02 QUALITY ASSURANCE

A. Reinforced-concrete pipe and fittings shall be manufactured by a reputable manufacturer with a minimum of five years experience in the design and fabrication thereof.

B. Standards:

1. Pipe: ASTM C-76 or AWWA 302-74, unless otherwise specified herein.

2. Gasket: ASTM C-443, or ASTM D-412.

3. Steel reinforcement: ASTM A-82.

4. Portland Cement: ASTM C-150.

C. Acceptable Manufacturers:

1. Hanson Pipe and Precast.

2. National Concrete Pipe Company.

3. Or equal

1.03 SUBMITTALS

A. Submit shop drawings in accordance with the General Conditions and Section 01340: Shop Drawings, Working Drawings and Samples showing pipe dimensions, reinforcement, joint and other details prior to fabrication.

B. Submit certified copies of mill test reports for all tests as outlined for concrete pipe under ASTM C-76 or AWWA 302-74.

1.04 PRODUCT DELIVERY, STORAGE AND HANDLING

A. Do not ship pipe units until they have aged for at least 5 days at an average minimum temperature of 60 degrees Fahrenheit (°F).

B. Prevent earth, water, and other material from entering the pipe at all times.

C Furnish devices to permit satisfactory support of the pipe and pre-cast unit when they are lifted and handle each unit in a manner and by such means as recommended by the manufacturer.

PART 2 - PRODUCTS

2.01 MATERIALS

A. Pipe:

1. Interior surfaces free from roughness, projections, indentations, offsets, or irregularities of any kind.

2. All pipes shall be Class III.

3. All pipes shall be wall thickness "B". If wall thickness "B" is not listed in ASTM C-76 for class of pipe required, then wall thickness shall be that required for wall "B" of the next higher class of pipe.

4. Minimum laying length: 8 feet, unless otherwise approved by the Engineer.

5. Reinforcement: Cold-drawn steel wire conforming to ASTM A-82. Elliptical reinforcement will not be permitted.

6. Cured as specified under ASTM C-76 or AWWA 302-74.

B. Joints:

1. Sealed by rubber gaskets conforming to Section 2.11 of AWWA C302-74.

2. Constructed to remain watertight during service and to allow movement due to expansion, contraction, and normal settlement.

3. External joints of the pipe laid below groundwater table shall be sealed by external sealing bands conforming to ANSI/ASTM C-877. The external sealing bands shall be as manufactured by Cadilloc, Inc., Escanaba, Michigan; or equal.

C. Gaskets:

1. Continuous rings of a composition and texture that will assure a watertight and permanent seal.

2. Suitable in size to fill the groove on the spigot when pipe lengths are assembled.

3. Smooth surfaces free from pitting, blisters, porosity, and other imperfections.

D. Concrete:

1. Consist of cement, sand and crushed stone or crushed or uncrushed gravel accurately proportioned for density and strength.

2. Minimum cement content six (6) bags (564 lbs.) per cubic yards.

3. Aggregate: Hard, durable particles, clean and free from loam and organic materials.

4. Water: Clean and free from deleterious amounts of acids, alkalis, and organic materials.

5. Minimum strength: 3,000 psi at 7 days, and 4,500 psi at 28 days.

E. Fittings:

1. Of the same strength as the pipe.

2. Joints compatible with pipe.

F. Marking: Clearly mark the following information on each unit of pipe:

1. Class of pipe.

2. Date of Manufacture.

3. Name of Manufacturer.

PART 3 - EXECUTION

3.01 INSTALLATION

A. Inspect all pipe prior to installation. Replace pipe discovered to be defective either before or after installation.

B. Install all pipe and fittings to the lines and grades shown on the Drawings as recommended by the manufacturer.

C. Jointing:

1. Thoroughly clean and check each joint before installing.

2. Thoroughly lubricate the bell and gasket with the lubricant supplied by the manufacturer.

3. Joint all lengths of pipe in accordance with the manufacturer's installation instructions.

4. Provide gasket feeler gauges for use by the pipe layer and the Engineer for checking the position of the rubber gaskets in the completed joints.

D. During installation, close open ends of pipe with temporary, water-tight plugs to prevent the entrance of earth, water, and other material from entering the pipe.

1. Mortar each joint by completely filling the entire recess around the outside of the pipe with a one (1) to two (2) mortar mix.

2. Mortar the inside joint recess of pipes 24 inches in diameter and larger by troweling flush with a one (1) to one (1) mortar mix.

3.02 INSPECTION

A. Acceptance will be on the basis of tests of materials, absorption tests, plant load bearing tests, pressure tests, and inspection of the complete product.

B. Inspection may be made at the place of manufacturer or on the construction site after delivery, or both, and the pipe shall be subject to rejection at any time due to failure to meet all of the specification requirements, even though sample pipe units may have been accepted as satisfactory at the place of manufacture.

C. Immediately remove from the project site all rejected pipe at no expense to the Owner.

END OF SECTION

DIVISION 9

COATINGS

SECTION 09905

PIPING, VALVE, AND EQUIPMENT IDENTIFICATION SYSTEM

PART 1 - GENERAL

1.01 DESCRIPTION

A. Scope of Work: The work included under this Section consists of providing an identification system for water main systems.

1.02 QUALITY ASSURANCE

A. Standards: ANSI Standard A13.1, Scheme for the Identification of Piping Systems.

1.03 SUBMITTALS

A. Submit manufacturer's descriptive literature, illustrations, specifications, and other pertinent data.

B. Schedules:

1. Provide a typewritten list of all tagged valves giving tag color, shape, letter code and number, the valve size, type, use, and general location.

2. Provide a complete list of materials to be furnished and surfaces on which they will be used.

C. Samples:

1. Provide a sample of each type valve tag supplied.

2. Provide a sample of each type of identification tape supplied.

3. Provide manufacturer's color charts for color selection by Engineer.

1.04 PRODUCTS DELIVERY, STORAGE, AND HANDING

A. Delivery Of Materials: Except for locally mixed custom colors, deliver sealed containers with labels legible and intact.

B. Storage Of Materials:

1. Store only acceptable project materials on project site.

2. Store in suitable location.

3. Restrict storage to paint materials and related equipment.

4. Comply with health and fire regulations.

1.05 JOB CONDITIONS

A. Environmental Requirements:

1. Comply with manufacturer's recommendations as to environmental conditions under which coatings and coating systems can be applied.

2. Do not apply finish in areas where dust is being generated.

B. Protection: Cover or otherwise protect finished work of other trades and surfaces not to be painted.

PART 2 - PRODUCTS

2.01 MATERIALS

A. Materials selected for coating systems for each type surface shall be the product of a single manufacturer.

B. Aboveground piping shall be identified by self-adhesive pipe markers equal to those manufactured by W. H. Brady Company.

1. Markers shall be of wording and color as shown in Table 09905.

2. Lettering shall be:

a) 2 1/4-inches high for pipes 3 inches diameter and larger.

b) 1 1/8-inches high for pipes less than 3 inches diameter.

3. Flow arrows shall be:

a) 2 1/4-inches by 6 inches for pipes 3 inches diameter and larger.

b) 1 1/8-inches by 3 inches for pipes less than 3 inches diameter.

C. Buried piping shall be identified by identification tape installed over the centerline of the pipelines.

1. Identification Tape for Steel or Iron Pipe: Identification tape shall be manufactured of inert polyethylene film so as to be highly resistant to alkalies, acids, or other destructive agents found in soil, and shall have a minimum thickness of 4 mils. Tape width shall be 6 inches and shall have background color specified below, imprinted with black letters. Imprint shall be as specified below and shall repeat itself a minimum of once every 2 feet for entire length of tape. Tape shall be Terra Tape Standard 250, or approved equal.

2. Identification Tape for Plastic or Non-Magnetic Pipe: Identification tape shall be manufactured of reinforced polyethylene film with a minimum overall thickness of 4 mils and shall have a 0.35 mil thick magnetic metallic foil core. The tape shall be highly resistant to alkalies, acids, and other destructive agents found in soil. Tape width shall be 3 inches and shall have background color specified below, imprinted with black letters. Imprint shall be as specified below and shall repeat itself a minimum of once every 2 feet for entire length of tape. Tape shall be TerraTape Sentry Line 1350, or approved equal.

3. Tape background colors and imprints shall be as follows:

Imprint	Background Color
"Caution Water Line Buried Below"	Blue
“Caution Storm Water Force Main Buried Below”	White

4. Identification tape shall be "Terra Tape" as manufactured by Reef Industries, Inc., Houston, TX; Allen Systems, Inc., Wheaton, IL; or approved equal.

D. Pipe Tracing

1. All buried piping shall be installed with continuous insulated 10 gauge solid copper tracer wire. Locating wire shall be color coated according to Table 09905. Locate wire installation shall pass a continuity check with an approved tracing system before acceptance by owner.

E. Aboveground Valve Identifications: A coded and numbered tag attached with brass chain and/or brass "S" hooks shall be provided on all valves.

1. Tag Types: Tags for valves on pipe shall be brass or anodized aluminum. Colors for aluminum tags shall, where possible, match the color code of the pipe line on which installed. Square tags shall be used to indicate normally closed valves and round tags shall indicate normally open valves.

2. Coding: In addition to the color coding, each tag shall be stamped or engraved with wording or abbreviations to indicate the valve service and number. All color and letter coding shall be approved by the Engineer. Valve service shall either be as listed in Table 09905, or by equipment abbreviation if associated with a particular piece of equipment. Valve numbering, if required, shall be as approved by the Engineer and/or Owner.

F. Buried valves shall have valve boxes protected by a concrete pad. The concrete pad for the valve box cover shall have a 3-inch diameter, bronze disc embedded in the surface as shown on the Drawings. The bronze disc shall have the following information neatly stamped on it:

1. Valve Service - See Table 09905 for abbreviations

2. Valve Identification No.

3. Size of valve, inches

4. Type of valve:

a) GV – Gate Valve

PART 3 - EXECUTION

3.01 COLOR CODING FOR PIPES AND EQUIPMENT

A. Piping color codes, and code labels for pipe identification shall conform to Table 09905.

B. General Notes and Guidelines:

1. Pipelines, equipment, or other items which are not listed here shall be assigned a color by the Owner and shall be treated as an integral part of the Contract.

2. Color coding shall consist of color code painting and identification of all exposed conduits, through lines and pipelines for the transport of gases, liquids, or semi-liquids including all accessories such as valves, insulated pipe coverings, fittings, junction boxes, bus bars, connectors and any operating accessories which are integral to a whole functional mechanical pipe and electrical conduit systems.

3. All moving parts, drive assemblies, and covers for moving parts which are potential hazards shall be Safety Orange.

4. All safety equipment shall be painted in accordance with OSHA standards.

5. All inline equipment and appurtenances not assigned another color shall be painted the same base color as the piping. The pipe system shall be painted with the pipe color up to, but not including, the flanges attached to pumps and mechanical equipment assigned another color.

6. All pipe hangers and pipe support floor standards shall be painted, unless specified otherwise due to material of construction.

C. All hangers and pipe support floor and accessories stands shall be painted to match their piping. The system shall be painted up to, but not including, the face of flanges or the flexible conduit connected to electrical equipment. Structural members used solely for pipe hangars or supports shall be painted to match their piping. Where the contact of dissimilar metals may cause electrolysis and where aluminum will contact concrete, mortar or plaster, the contact surface of the metals shall be coated in accordance with Section 09900.

D. All systems which are an integral part of the equipment, that is originating from the equipment and returning to the same piece of equipment, shall be painted between and up to, but not including, the face of flanges or connections on the equipment.

E. All insulated surfaces, unless otherwise specified, shall be given one coat of glue sizing, one prime coat and one finish coat.

3.02 FABRICATED EQUIPMENT

A. Unless otherwise indicated or specifically approved, all fabricated equipment shall be shop primed and finished.

B. The Contractor shall be responsible for and take whatever steps are necessary to properly protect the shop prime and finish coats against damage from weather or any other cause.

3.03 INSTALLATION OF IDENTIFICATION TAPE

A. Identification tape shall be installed for all buried piping in accordance with the manufacturer's installation instructions and as specified herein.

B. Identification tape for piping shall be installed at two (2) locations:

1. One (1) foot below finished grade along centerline of pipe, and;

2. Directly on top of the pipe.

3.04 INSTALLATION OF TRACING WIRE

A. All PVC pipe or other approved nonmetallic pipe installed within Deltona Water's water, sanitary sewer, stormwater, or reuse water systems shall be installed with continuous insulated 10-gauge solid copper tracing wire.

B. The tracing wire must be installed directly above the pipe and brought to the surface at 500-foot minimum intervals. Wire shall extend a minimum of 12 inches above grade at each interval and be coiled and placed in a valve box, meter box, manhole, cleanout, or other applicable structure.

C. Tracing wire between intervals shall be installed so as to provide continuous current when line location equipment is connected to the tracing wire. Wire branching from main lines shall be linked by a Deltona Water approved connector such as King #2011 safety sealed connectors or approved equal.

3.05 BURIED VALVES

A. In paved or concrete areas, tops of valve box covers shall be set flush with pavement or concrete top. In concrete areas, valve boxes shall be embedded. Following paving operations, a 24 inch square shall be neatly cut in the pavement around the box and the paving removed. The top of the box shall then be adjusted to the proper elevation and a 24 inch square by 6 inch thick concrete pad poured around the box cover. Concrete pads in traffic areas shall be reinforced with No. 4 reinforcement bars as shown on the Drawings. Concrete for the pad shall be 3,000 psi compressive strength.

B. In unpaved areas, tops of valve box covers shall be set 0.20-foot above finished grade. After the top of the box is set to the proper elevation, a 24 inch square by 6 inch thick concrete pad shall be poured around the box cover. Concrete for the pad shall be 3,000 psi compressive strength.

C. The bronze, valve identification disc shall be embedded in the concrete pad.

3.06 EQUIPMENT

A. Stainless steel nameplates giving the name of the manufacturer, serial number, model number, horsepower, speed, voltage, amperes, an all other pertinent data shall be attached to each motor.

TABLE 09905

COLOR CODES AND ABBREVIATIONS

Service	Mark	Conduit, Pipe, and Valve Color Code	Letter and Flow Arrow Color
Potable Water	PW	Dark Blue	White
Storm Water	STR	White	Black

END OF SECTION

DIVISION 15

MECHANICAL

SECTION 15044

PRESSURE TESTING OF PIPING

PART 1 - GENERAL

1.01 DESCRIPTION

A. Scope of Work: This section specifies the leakage testing requirements for water main and force main piping.

B. Test Pressures: Test pressures for the various services and types of piping are shown in Table 15044, at the end of this Section.

C. Testing Records:

1. Provide a record of each piping installation during the testing. These records shall include:

a) Date of test.

b) Identification of pipeline tested or retested.

c) Identification of pipeline material.

d) Identification of pipe specification.

e) Test fluid.

f) Test pressure.

g) Remarks: Leaks identified (type and location), types of repairs, or corrections made.

h) Certification by Contractor of no leakage as specified herein.

i) Signature of Owner's representative witnessing pipe test.

2. Submit five (5) copies of the test records to the Engineer's representative upon completion of the testing.

PART 2 - PRODUCTS

2.01 GENERAL

A. Testing fluid shall be water for all hydrostatic tests.

2.02 MATERIALS AND EQUIPMENT

A. Provide pressure gauges, pipes, bulkheads, pumps, and meters to perform the hydrostatic testing.

PART 3 - EXECUTION

3.01 TESTING PREPARATION

A. Pipes shall be in place and anchored before commencing pressure testing.

B. Before conducting hydrostatic tests, flush pipes with water to remove dirt and debris.

C. Test new pipelines which are to be connected to existing pipelines by isolating the new line from the existing line by means of pipe caps, special flanges, or blind flanges. After the new line has been successfully tested, remove caps or flanges and connect to the existing piping.

D. Conduct hydrostatic tests on buried pipe after the trench has been completely backfilled. The pipe may be partially backfilled and the joints left exposed for inspection for an initial leakage test. Perform the final test, however, after completely backfilling and compacting the trench.

E. Pressure Test:

1. All tests shall be made in the presence of and to the satisfaction of the Owner or Engineer and also, to the satisfaction of any local or state inspector having jurisdiction.

a. Provide not less than three (3) days notice to the Owner, Engineer, and the authority having jurisdiction when it is proposed to make the tests.

b. Any piping or equipment that has been left unprotected and subject to mechanical or other injury in the opinion of the Engineer shall be retested in part or in whole as directed by the Engineer.

c. The piping systems may be tested in sections as the work progresses, but no joint or portion of the system shall be left untested.

2. All elements within the system that may be damaged by the testing operation shall be removed or otherwise protected during the operation.

3. Repair all damage done to existing or adjacent work or materials due to or on account of the tests.

3.02 INSPECTION AND TESTING

A. Hydrostatic Testing of Buried Piping:

1. Where any section of the piping contains concrete thrust blocks or encasement, do not make the pressure test until at least 10 days after the concrete has been poured. When testing mortar-lined piping, fill the pipe to be tested with water and allow it to soak for at least 48 hours to absorb water before conducting the pressure test.

2. Apply and maintain the test pressure by means of a hydraulic force pump. Maintain the test pressure for a minimum duration of two (2) hours. After the test pressure is reached, use a meter to measure the additional water added to maintain the pressure during the two hours. This amount of water is the loss due to leakage in the piping system. No leakage will be allowed.

TABLE 15044

PIPING PRESSURE TEST SCHEDULE

Service	Mark	Test Pressure (psig)
Water	WM	150
Storm Water	STR	100

NOTES:

1. Piping not listed and sections of piping in gross discrepancy with listed pressure, with the approval of the Engineer, shall be tested at a minimum of 1.5 times working pressure.

END OF SECTION

SECTION 15050

UTILITY PIPING, FITTINGS, VALVES, AND ACCESSORIES

PART 1-GENERAL

1.01 DESCRIPTION

A. Scope of Work:

1. The Work included in this Section consists of furnishing all labor, equipment, and materials and in performing all operations necessary for the construction, installation or restoration of all utility piping, valves, and appurtenances complete and ready for operation as shown on the Drawings and specified herein.

2. All products in contact with potable water shall be in accordance with ANSI/NSF Standard 61 for potable water contact.

3. All stormwater piping shall follow wastewater piping standards herein.

B. Related Work Described Elsewhere:

1. Section 15044: Pressure Testing of Piping

1.02 QUALITY ASSURANCE

A. Construction Requirements:

1. All the lines shall be installed with at least 36 inches of cover, unless otherwise shown or indicated on the Drawings.

2. For underground utilities, changes in horizontal alignment of less than 11-1/4 degrees may be achieved through the use of allowable pipe deflection in lieu of fittings shown on the Drawings at the Contractor's option, but subject to approval of the Engineer as to layout. Said deflection shall not exceed 80 percent of the maximum allowable deflection as stated in the pipe manufacturer's installation instructions.

3. All piping installed above grade and underneath structures or concrete slabs shall be ductile iron Pressure Class 250 for 14-inch pipe and larger and Pressure Class 350 for 12-inch pipe and smaller.

4. Install proposed pipe so as not to scratch, dent, or damage any existing pipes. Pipe shall be installed in a way that prevents damaging existing pipe. If existing pipes are damaged due to construction, the contractor shall be required to repair the pipe according to the Owner's requirements.

B. Pipe Inspection: The Contractor shall obtain from the pipe manufacturers a certificate of inspection to the effect that the pipe and fittings supplied for this Contract have been inspected at the plant and that they meet the requirements of these Specifications. All pipe and fittings shall be subject to visual inspection at time of delivery by rail or truck and also just before they are lowered into the trench to be laid. Joints or fittings that do not conform to these Specifications will be rejected and must be removed immediately by the Contractor.

The entire product of any plant may be rejected when, in the opinion of the Engineer, the methods of manufacture fail to secure uniform results, or where the materials used are such as to produce inferior pipe or fittings.

1.03 SUBMITTALS

A. Shop Drawings:

1. In general, the following Shop Drawings shall be submitted to the Engineer for approval prior to construction:

a) Mill test certificates or certified test reports on pipe and fittings.
b) Details of restrained and flexible joints.
c) Valve boxes.
d) All valves.
e) Couplings.
f) Wet taps.
g) Pressure gauges.
h) Joint lubricant.
i) Temporary plug and anchorage system for hydrostatic pressure test.

2. A separate Shop Drawing submittal will be required for each major item listed above and for each different type of an item within a major item. For example, separate submittals will be required for butterfly, plug, ball, solenoid, check, and automatic air release valves.

B. Acceptance of Material:

1. The Contractor shall furnish an Affidavit of Compliance certified by the pipe manufacturer that the pipe, fittings, and specials furnished under this Contract comply with all applicable provisions of current AWWA and ASTM standards and these Specifications. No pipe or fittings will be

accepted for use in the Work on this project until the Affidavit has been submitted and approved by the Engineer.

2. The Owner reserves the right to sample and test any pipe or fitting after delivery and to reject all pipe and fittings represented by any sample which fails to comply with the specified requirements.

C. Operation and Maintenance Manuals: Submit operation and maintenance manuals for applicable components requiring periodic maintenance and/or explanation of operation, at the discretion of the Engineer. Manuals shall be prepared in accordance with Section 01730: Operating and Maintenance Data.

1.04 DELIVERY, STORAGE AND HANDLING

A. Pipe, fittings, valves, and accessories shall be handled in such manner as to ensure a sound undamaged condition during shipping, delivering, and installing.

B. Particular care shall be taken not to injure the pipe coating and linings.

C. Insides of valves and piping shall be kept free of dirt and debris.

1.05 JOB CONDITIONS

A. Water in Excavation: Water shall not be allowed in the trenches while underground pipes are being laid and/or tested. The Contractor shall not open more trench than the available pumping facilities are able to dewater to the satisfaction of the Engineer. The Contractor shall assume responsibility for disposing of all water so as not to injure or interfere with the normal drainage of the territory in which he is working. In no case shall the pipelines being installed be used as drains for such water, and the ends of the pipe shall be kept properly and adequately plugged during construction by the use of approved stoppers and not by improvised equipment. All necessary precautions shall be taken to prevent the entrance of mud, sand, or other obstructing matter into the pipelines. If on completion of the work any such materials have entered the pipelines, it must be cleaned as directed by the Engineer so that the entire system will be left clean and unobstructed.

PART 2 - PRODUCTS

2.01 DUCTILE IRON PIPE AND FITTINGS

A. Ductile Iron Pipe: Ductile iron pipe shall conform to the requirements of ANSI, A21.51 and AWWA C151, latest revision. The minimum thickness class for underground pipe shall be Class 350 for 4-inch through 12-inch pipe. The minimum thickness class for underground pipe shall be Class 250 for 14-inch pipe

through 54-inch pipe. Flanged pipe shall have a minimum thickness class of Class 53.

B. Pipe shall have a minimum rated water working pressure of 350 psi and 250 psi, respectively, and shall be furnished in laying lengths of 20 feet or less, unless specifically shown otherwise on the Drawings. The following manufacturers may be used: American, McWane, or U.S. Pipe.

C. Coating and Lining:

1. Interior Lining for Potable Water Main: All ductile iron pipe shall have an interior protective coating of cement-mortar with a seal coat of asphaltic material in accordance with ANSI/AWWA A21.4/C104.

2. Interior Lining for Wastewater and Storm Water Force Main Piping: Ductile iron pipe, fittings, and specials shall be lined with Protecto 401 Ceramic Epoxy, a high build multi-component amine cured Novalac epoxy lining, containing at least 20 percent by volume of ceramic quartz pigment, manufactured by Indurall Coatings, Inc., Birmingham, Alabama, or approved equal. The interiors of the ductile iron pipe, fittings, and specials shall receive 40 mils dry film thickness (DFT) of the ceramic epoxy protective lining. Storage, surface preparation, application, and safety precautions shall strictly follow manufacturer's instructions.

3. Where ductile iron pipe and fittings are to be below ground or installed in a casing pipe the exterior coating shall be a minimum 1.0 mil thick in accordance with ANSI/AWWA A21.51/C151. Where ductile iron pipe and fittings are to be installed above ground, pipe, fittings, and valves shall be thoroughly cleaned and given one field coat (minimum 1.5 mils dry thickness) of just inhibitor primer. Intermediate and finished field coats of lkyd enamel shall also be applied by the Contractor (minimum 1.5 mils dry thickness each coat).

4. Exterior Coatings for Buried Pipe: Ductile iron pipe, fittings, and specials to be installed underground shall be coated on exterior at the factory with two coats, 10.0 mils DFT per coat, of coal tar epoxy. All clamps, bolts, nuts, studs, and other uncoated parts of joints for underground installation shall be coated with coal tar epoxy prior to backfilling. Coal tar epoxy shall be equal to Kop-Coat Bitumastic No. 300-M.

5. Exterior Coating for Exposed Pipe: Ductile iron pipe, fittings, and specials to be installed aboveground shall be furnished with a shop applied primer on the exterior.

D. Fittings: Fittings for ductile iron pipe shall be either mechanical joint, restrained joint, or flanged joint as indicated on the Drawings and shall have a minimum working pressure of 250 psi. Fittings shall be ductile iron and shall conform to ANSI/AWWA C110, ANSI/AWWA C111 and ANSI/AWWA C153, latest revisions for flanged and mechanical joint pipe. Fittings shall be coated and lined as indicated on the Drawings, in the manner specified above for ductile iron pipe. The rubber gaskets for flanged, mechanical, and push-on joints shall be as described below.

E. Push-On Joints: Pipe using push-on joints shall be in strict accordance with AWWA C111 and ANSI A21.11, latest revision and shall be as manufactured by American Cast Iron Pipe Company (Fastite Joint), United States Pipe Company (Tyton Joint), or Clow Corporation (Super Bell Tite Joint). Jointing materials shall be provided by the pipe manufacturer and installation shall be in strict accordance with the manufacturer's recommended practice.

F. Mechanical Joints: Jointing materials for mechanical joints shall be provided by the pipe and fitting manufacturer. Materials assembly and bolting shall be in strict accordance with ANSI/AWWA C111 and ANSI/AWWA C153, latest revisions. Tee head bolts and nuts for mechanical joints shall be manufactured of CORTEN, high strength, low alloy, corrosion resistant steel as manufactured by NSS Industries, Plymouth, Michigan or an equal approved by the Engineer.

G. Flanged Joints: Flanges shall be Class 125 per ANSI B16.1 with any special drilling and tapping as required to insure correct alignment and bolting.

1. Gaskets: Fullface, 1/8-inch thick, cloth-inserted rubber: Johns-Manville No. 109, John Crane Co., Style 777, or equal. Gaskets shall be suitable for a water pressure of 350 psi at a temperature of 180°F.

H. Restrained Joints and Fittings: Pipe joints and fittings shall be restrained in accordance with restrained joint detail as shown on the drawings and the requirements of this Specification. It is intended that, at a minimum, all fittings shall be restrained. In cases where the calculated required length of restrained pipe is not evenly divisible by nominal laying lengths of pipe, the total required length of restrained pipe shall be rounded up to the next closest nominal length that is evenly divisible by the standard laying length.

1. Manufactured Restrained Joints: Manufactured restrained joints shall be Tyler, MJR, Romac Grip Ring, EBAA Iron, Uniflange, Sigma. Joints shall be manufacturer's standard specifically modified push-on type joints with joint restraint provided by ductile iron retainer rings joined together by corrosion-resistant, high strength steel tee head bolts and nuts or with joint restraint provided by a welded-on retainer ring and a split flexible ring assembled behind the retainer ring.

2. Restrained joint pipe and fittings shall be ductile iron only and shall comply with applicable portions of this Specification. Manufactured restrained joints shall be capable of deflection during assembly. Deflection shall not exceed 80 percent of the manufacturer's recommendations.

3. Tee head bolts and nuts for restrained joints shall be manufactured of CORTEN, high strength, low alloy, corrosion resistant steel as manufactured by NSS Industries, Plymouth, Michigan, or an equal approved by the Engineer.

I. Alternate Restrained Joints: Ductile iron pipe and fittings with mechanical joints may be restrained using a follower gland which includes a restraining mechanism. When actuated during installation, the restraining device shall impart multiple wedging action against the pipe wall which increases resistance as internal pressure in the pipeline increases.

1. The joint shall maintain flexibility after installation. Glands shall be manufactured of ductile iron conforming to ASTM A536 and restraining devices shall be of heat treated ductile iron with a minimum hardness of 370 BHN. The gland shall have standard dimension and bolting patterns for mechanical joints conforming to ANSI/AWWA C111 and C153, latest revisions.

2. Tee head bolts and nuts shall be manufactured of corrosion-resistant, high strength, low alloy CORTEN steel in accordance with ASTM A242.

3. The restraining wedges shall have twist-off nuts to insure proper torquing. The mechanical joint restraint device shall have a minimum working pressure rating of 250 psi with a minimum safety factor of 2 to 1 and shall be MEGALUG® as manufactured by EBBA Iron, Inc. No other retainer gland type device will be acceptable. After installation prior to backfilling, all parts of the joint restraint system shall be coated with coal tar epoxy equal to Kop-Coat Bitumastic No. 300-M.

J. Polyethylene Pipe Casement

1. Polyethylene tube encasement shall be provided and installed for buried ductile iron pipe segments and fittings indicated on the Contract Drawings or specified herein. Both material type and installation procedures shall be in accordance with AWWA C105/ANSI A21.5.

2. Ductile iron pipe, fittings, and specials for underground installation shall be encased for a minimum of 20-feet perpendicular distance on each side

of any crossings of cathodically protected pipelines, and/or any portion of the proposed ductile iron pipeline laid parallel to and within 10-feet of any cathodically protected pipelines.

3. The polythylene encasement shall be a minimum of 8 mil thick and shall be certified by the manufacturer to provide suitable protection for pipe installed in corrosive soil. The polyethylene material shall be Class A, Grade E-1 with a flow rate (melt index) of 0.4 g/10 min. maximum, Dielectric strength of 800 V/mil thickness and tensile strength of 1200 psi.

4. The Contractor shall install the polyethylene encasement in accordance with all recommendations of the liner and pipe manufacturers and as specified here within.

2.02 POLYVINYL CHLORIDE (PVC) PIPE AND FITTINGS

A. Small Pressure Piping for Water Service: Unless otherwise specified, pressure pipe smaller than 4-inches minimal diameter shall be polyethylene tubing conforming to AWWA C800 and C901.

1. Fittings shall be brass, cast and machined in accordance with Specifications AWWA C800 and C901 with compatible polyethylene tubing connections.

B. Large PVC Pressure Piping for Potable Water Service: Unless otherwise noted, PVC pressure pipe for nominal diameters 4 inches and larger in size shall conform to the requirements of AWWA C900 DR18 up to 12 inches and AWWA C905 DR18 larger than 12 inches with gasketed integral bell ends. Pipe shall be designed for maximum working pressure of not less than 150 psi and with not less than a 4 to 1 sustained hydrostatic pressure safety factor. Potable water main shall be blue in color. Fittings shall be ductile iron fittings with restrained mechanical joint ends. Pipe shall be made to ductile iron pipe O.D.'s instead of IPS.

1. Bell and Spigot:

Pipe joints shall be made with integral bell and spigot pipe ends. The bell shall consist of an integral thickened wall section designed to be at least as strong as the pipe wall. PVC pipe shall have integral bell push-on type joints conforming to ASTM D3139. The gasket shall meet the requirements of ASTM F477 "Elastomeric Seals (Gaskets) for Joining Plastic Pipe". PVC pipe for potable water water service shall be manufactured by Certainteed, Can-Tex, North Star, J-M, Capco, H&W Industries, Freedom, Ipex, or National Pipe.

2. Restrained Joints:

In accordance with the Drawings, to prevent pipe joints and fittings from separating under pressure, pipe joints and fittings shall be restrained as follows. The following manufacturers may be used: EBAA Iron, Tyler, MJR, Romac Grip Ring, Sigma, and Uniflange.

a) PVC pipe bell and spigot joints shall be restrained with the EBBA Iron MEGALUG® Series 1500 Restrainer or an equal approved by the Engineer. The restraining device and Tee head bolts shall be manufactured of high strength ductile iron meeting ASTM A536, Grade 6542-10. Clamping bolts and nuts shall be manufactured of corrosion resistant high strength, low alloy CORTEN steel meeting the requirements of ASTM A242.

b) Mechanical joint fittings used with PVC pipe shall be restrained with the EBBA Iron MEGALUG® Series 2000 PV Restrainer or an equal approved by the Engineer. The restraining device and Tee head bolts shall be manufactured of high strength ductile iron meeting ASTM A536, Grade 65-42-10. Clamping bolts and nuts shall be manufactured of corrosion resistant high strength, low alloy CORTEN steel meeting the requirements of ASTM A242.

C. Large PVC Pressure Piping for Wastewater Service and Storm Water Force Main: Unless otherwise noted, PVC pressure pipe for nominal diameters 4 inches and larger in size shall conform to the requirements of AWWA C900 DR25 up to 12 inches and AWWA C905 DR25 larger than 12 inches with gasketed integral bell ends. Pipe shall be designed for maximum working pressure of not less than 100 psi and with not less than a 4 to 1 sustained hydrostatic pressure safety factor. Pipe shall be green in color. Fittings shall be ductile iron fittings with restrained mechanical joint ends. Pipe shall be made to ductile iron pipe O.D.'s instead of IPS.

1. Bell and Spigot:

Pipe joints shall be made with integral bell and spigot pipe ends. The bell shall consist of an integral thickened wall section designed to be at least as strong as the pipe wall. PVC pipe shall have integral bell push-on type joints conforming to ASTM D3139. The gasket shall meet the requirements of ASTM F477 "Elastomeric Seals (Gaskets) for Joining Plastic Pipe". PVC pipe for wastewater service shall be manufactured by National Pipe, North American, North Star (North American Pipe), J-M, Diamond, H&W Industries (North American Pipe), or Freedom Plastic.

2. Restrained Joints:

In accordance with the Drawings, to prevent pipe joints and fittings from separating under pressure, pipe joints and fittings shall be restrained as follows. The following manufacturers may be used: EBAA Iron: Megalug, Ford: UFR Series

a) PVC pipe bell and spigot joints shall be restrained with the EBBA Iron MEGALUG® Series 1500 Restrainer or an equal approved by the Engineer. The restraining device and Tee head bolts shall be manufactured of high strength ductile iron meeting ASTM A536, Grade 6542-10. Clamping bolts and nuts shall be manufactured of corrosion resistant high strength, low alloy CORTEN steel meeting the requirements of ASTM A242.

b) Mechanical joint fittings used with PVC pipe shall be restrained with the EBBA Iron MEGALUG® Series 2000 PV Restrainer or an equal approved by the Engineer. The restraining device and Tee head bolts shall be manufactured of high strength ductile iron meeting ASTM A536, Grade 65-42-10. Clamping bolts and nuts shall be manufactured of corrosion resistant high strength, low alloy CORTEN steel meeting the requirements of ASTM A242.

2.03 GATE VALVES

A. Iron Gate Valves:

1. Iron gate valves shall open by turning to the left (counter-clockwise), when viewed from the stem. When fully open, gate valves shall have a clear waterway equal to the nominal diameter of the pipe. Operating nut or hand wheel shall have an arrow cast in the metal indicating the direction of opening. Each valve shall have the manufacturer's distinctive marking, pressure rating and year of manufacture cast on the body. Prior to shipment from the factory, each valve shall be tested by applying to it a hydrostatic pressure equal to twice the specified working pressure. Hydrostatic and leakage tests shall be conducted in strict accordance with ANSI/AWWA C500 or ANSI/AWWA C509, latest revisions, whichever is applicable. Each valve shall be fusion bond epoxy coated.

2. Gate valves with nominal sizes from 2 to 2 1/2 inches shall conform to ANSI/AWWA C500, latest revision, and shall be designed for a minimum working pressure of 200 psi. Valves shall be iron body, bronze-mounted, double disc, parallel seat, non-rising stem type with double, Buna-N, O-ring stem seals. Bronze items of construction shall include the stems, seat rings, stem nuts, wedge bushings, and upper and lower wedges.

Bronze used for construction of these items shall be low zinc alloy bronze. Valve ends shall be screwed and as specified for steel pipe and fittings. Interior ferrous surfaces of valve, except for finished or bearing surfaces, shall be coated with a fusion bonded or thermo-setting epoxy coating in accordance with AWWA C550, latest revision. Coating shall be holiday-free, NSF approved, with a minimum thickness of 16 mils. Surfaces shall be clean, dry, and free from rust and grease before coating. Exterior surfaces shall be coated as specified hereinafter. Gate valves for this size range shall be as manufactured by American-Darling Valve Company, Kennedy Valve Manufacturing Company, or Dresser Industries, Inc.

3. Gate valves with nominal sizes from 3 to 16 inches shall conform to ANSI/AWWA C509, latest revision, and shall be designed for a minimum working pressure of 200 psi. Valves shall be iron body resilient seat type with O-ring stem seals. The valve stem, stem nut, glands, and bushings shall be bronze. Valve disc shall be constructed to assure uniform seating pressure between disc seat ring and body seating surface. Resilient seat of valve shall be formed by a special corrosion and chloramine resistant, synthetic elastomer which is permanently bonded to and completely encapsulates a cast iron valve disc. Valve ends for underground installation shall be mechanical joint as specified for ductile iron pipe and flanged for above-ground valves. Resilient-seated type gate valves shall be manufactured by Clow F6100, Mueller A-2360, A-2361, U.S. Pipe Metroseal 250, Waterous Series 500, American Flow Control Series 2500, M&H 4067, ITT Kennedy: Ken Seal II, and AVK.

4. Valve Joints: All gate valves shall have either mechanical joint, restrained joint, or flanged ends to fit the pipe run in which they are to be used. Gate valves installed on push-on joint pipe shall have mechanical joint ends unless otherwise specified.

5. Valve Operators: Unless otherwise shown on the Drawings or specified herein, gate valves shall have non-rising stems. Buried gate valves shall be furnished with a 2-inch square AWWA standard nut operator with a valve box and cover. Gate valves located aboveground or inside structures shall be furnished with a handwheel operator which shall have an arrow cast in the metal indicating the direction of opening. Gate valves used as isolation valves for reduced pressure back flow preventers shall be of the open screw and yoke (OS&Y) design with a handwheel operator.

6. Interior Valve Coating: Interior of the valve body shall be coated with a fusion bonded or thermo-setting epoxy coating in accordance with AWWA C550, latest revision. Coating shall be holiday-free, NSF approved, with a minimum thickness of 16 mils. Surfaces shall be clean, dry, and free from rust and grease before coating.

2.04 VALVE BOXES

A. Furnish, assemble, and place a valve box over the operating nut for each buried valve. The valve box shall be designed so as to prevent the transmission of surface loads directly to the valve or piping.

B. Valve boxes shall be of the adjustable slide-type of suitable length with an interior diameter of not less than 5 inches. The valve boxes shall be manufactured of cast iron and shall be of the two piece design including a bottom section and top section with cover. The cast iron cover shall be cast with the applicable service, "WATER" or “STORM WATER” markings. The top section shall be adjustable for elevation and shall be set to allow equal movement above and below finished grade.

C. The castings shall be manufactured of clean, even grain, gray cast iron conforming to ASTM A48, Class 30B for Gray Iron Castings; and shall be smooth, true to pattern, free from blow holes, sand holes, projections, and other harmful defects. The seating surfaces of both the cover and the top section shall be machined so that the cover will not rock after it has been seated.

D. The valve boxes shall be coated inside and outside with an asphaltic coating prior to machining, so that the machined seating surfaces will be free of any coating. Cast iron valve box assemblies shall be, Tyler Corp. or Sigma. Valve extension stems shall be provided for all buried valves when operating nut is deeper than 3 feet below final grade.

2.05 CORPORATION STOPS

A. Corporation stops shall be designed and manufactured in accordance with AWWA C-800, latest edition. Inlet threads shall be AWWA-taper thread (CC). Outlet shall be fitted with connections to suit connecting pipe or tube. Provide insert stiffeners for plastic tubing and PE pipe.

B. Corporation stops shall be manufactured by Ford FB-1000 (1" corp stop: F1100-4), or Mueller: H-15008, H-15013).

2.06 TIE RODS

A. When prior approval is obtained from the Engineer, ductile iron pipe, fittings, and valves may be restrained using tie bolt joint restraint. Joint restraint materials for this method of restraint shall be the Super-Star SST Series Joint Restraint System as manufactured by Star National Products, a Division of Star Industries, Inc. Columbus, Ohio, or an equal approved by the Engineer.

B. All bolts, nuts, washers, tie rods, and other fasteners for the joint restraint system shall be manufactured of CORTEN high strength, low alloy, corrosion-resistant steel in conformance with ASTM A242. Tie bolts shall be manufactured of heat treated CORTEN steel. Tie rods and all fasteners for the system shall be galvanized in conformance with the requirements of ASTM A123. Tie rods shall have a minimum diameter of 3/4-inch. The number of tie rods required per joint shall be as recommended by the manufacturer.

C. Prior to backfilling after installation, all parts of the joint restraint system shall be coated with coal tar epoxy equal to Kop-Coat Bitumastic No. 300-M, for a minimum dry film thickness of 20 mils.

2.07 TAPPING SLEEVES AND VALVES

A. General: Tapping sleeves used to make “wet” taps into existing mains shall be provided and installed at location as shown on the Drawings. Tapping sleeves shall be mechanical joint sleeves or fabricated steel sleeves as specified below. All pressure connections to asbestos cement pipe and all "size on size" taps shall utilize 304 stainless steel sleeves where approved. The Contractor shall determine the outside diameter of the existing main before ordering the sleeve. Test plug (3/4" NPT) shall be provided on sleeves.

B. Steel Tapping Sleeves

1. Sleeves shall be fabricated of minimum 3/8" stainless steel meeting ASTM A285 Grade C or ASTM A-36. Outlet flange shall meet AWWA C-207, Class "D" ANSI 150 lb. drilling and be properly recessed for the tapping valve. Nuts, bolts, and washers shall be 304 stainless steel. Gasket shall be synthetic rubber. Sleeve shall have manufacturer applied fusion bonded epoxy coating, minimum 12 mil thickness. Sleeves shall be rated at minimum 150 psi working pressure.

2. Steel Tapping Sleeves shall be manufactured by Smith Blair, JCM, Baker, Ford, Water Works, or Mueller.

C. Tapping Sleeves shall be manufactured by Ford: FAST, Mueller: H-30455, Romac SST, or Smith Blair: #663.

D. Tapping Valves

1. Tapping valves, 3 inches through 12 inches, shall be resilient seat gate valves as specified above except as modified herein.

2. End Configurations:

a. Tapping sleeve side: Flanged meeting MSS SP-60 ANSI 16.1 drilling and AWWA C-110 with centering ring.

b. Outlet side: Mechanical joint conforming to AWWA C-111.

3. Tapping valves shall be manufactured by Mueller: T-2360-16, M&H: #4751, American Flow Control: Series 2500, Clow: F-5093, Kennedy: #950-X, Waterout: Series 800, U.S. Pipe: Metroseal 250, American AVK.

2.08 POLYETHYLENE TUBING

A. Polyethylene tubing, 3/4” to 2” diameter, for water service lines shall be municipal service tubing, copper tube sized and approved by the NSF for use in transmitting fluids for human consumption. The PE materials for tubing shall be blue in color and designed for a hydrostatic design stress of 800 psi for water at 23 degrees C (73.4 degrees F). Tubing shall be DR 9, material specification PE 3408, and conform to the requirements of AWWA C901 and ASTM Designation D2737. Tubing shall be manufactured by Endot, Endopure.

2.09 CURB STOP

A. Curb stop shall be constructed of bronze conforming to AWWA C-800 (ASTM B62). O-rings and seats shall be Buna-N rubber. Inlet and outlet connections shall be suitable for use with connecting pipe, tubing, yoke or meter as applicable. Plastic insert stiffeners shall be provided for plastic tubing and PE pipe as manufactured by Mars Part Nos. 090970WH and 090972WH. Curb stop shall be manufactured by Ford. Meter valve shall be manufactured by Ford Single ¾", B43-342W, Single 1", B43-344W, Double Service/Branch VAV43-42W.

2.10 SERVICE SADDLES

A. Service saddles shall be of double strap type and suitable to 150 psi working pressure, with 2-inch outlet. Outlets shall be AWWA tapered thread (CC) for corporation stops or IP thread for gate valves. Brass nipple required for connecting gate valve to saddle. Gaskets shall be Buna-N rubber (ASTM-D200 80 MS BG506) or neoprene. Straps shall be flattened to provide wider bearing surface.

B. Iron Saddles: Body to be ductile iron. Nuts, washers, and straps shall be AISA Type 304 Stainless Steel.

C. Brass Saddles: Boby and nuts constructed of brass alloy per ASTM B-62 and AWWA C-800. Strap material to be high quality silicone bronze.

D. Service saddles shall be manufactured by Ford.

2.11 AIR RELEASE AND VACUUM RELEASE VALVES

A. Potable Water Air Release Valve

1. Design: Single body, single orifice to allow entrained air to escape line. Compound lever mechanism actuated by a float to prevent water from escaping.

2. Materials:

   a) Body: Reinforced Nylon (PV) ASTM A48 CL 35B Cast Iron (CV)
   b) Sleeve: NSF 61 Certified Reinforced Nylon
   c) Float and Stem: NSF 61 Certified Foamed Polypropylene
   d) Rolling Seal: NSF 61 Certified EPDM
   e) Other Internals: Reinforced Nylon
   f) Bolts and Nuts: 316 Stainless Steel

3. Isolation Valve: Resilient seated gate valve.

4. Accessories: Vacuum guarding, out only attachment (one way valve).

5. Working Pressure: Valve shall be for 100 psi (minimum) working pressure.

6. Valve shall have a standard 2-inch NPT inlet and outlet ports, unless otherwise shown on the drawings.

7. Manufacturer: ARI D-040-PV (Vault Installations), or ARI D-040-CV (Exposed to Atmosphere).

B. Sewage Service (Force Main) and Stormwater Force Main

1. Sewage Combination Air Valves (SCAV)
   a. Combination Air Release and Air and Vacuum valve for sewage industrial wastewater, and stormwater.
   b. The valve will be A.R.I. D-025 for below grade and A.R.I. D-020 for above grade installations, specially designed to operate with liquids carrying sold particles, such as wastewater, which should not be expelled to the environment.
   c. The valve will have a conical shaped body with a cam lock back flush attachment as part of the working mechanism.

d. The stainless steel float will be spring loaded to allow for system vibrations and turbulence.

e. The operating mechanism shall be non-metallic and corrosion resistant.

f. The working pressures will be 3-360 psi.

g. The valve will be of the type that releases large amounts of air, gases, and vapor during the filling of the system and admits large amounts of air when the system drains to prevent vacuum damage to pipeline and accessories.

h. The valve must release accumulated air from the system while the system operates under pressure, while maintaining an air pocket separation between the liquid and the working mechanism. The air release orifice will be 0.0186 $inch^2$ and will be an integral extension of the air and vacuum orifice, which shall be rectangular in shape.

i. Isolation Valve: Ball valve per Section 15050, 2.17. Ball valve shall be same size as threaded opening.

j. Manufacturer: ARI: D-025P (plastic for vault installations), ARI: D-020 (steel w/fusion bonded coating above grade), or equal, appropriately sized for intended service or as indicated on the Drawings.

C. Valve Vault Frame and Cover shall be manufactured by U.S. Foundry, Part No. USF #663-AB-MB (CRA only), USF #663-AB-MK or by Rusco.

D. Above ground air release valve enclosures with pin allen locking mechanism, shall be manufactured by Water Plus, Part No. 30 (131632) or No. 40 (171730).

2.12 TEMPORARY SAMPLING STATION:

A. Temporary sampling stations shall be a combination of corporation stop, polyethylene tubing, and curb stops. Each test service shall terminate above grade with a curb stop and smooth nosed sampling tap. Temporary sampling stations shall be properly abandoned after successful testing.

2.13 MISCELLANEOUS ITEMS

A. Other items necessary for the complete installation and not specified herein shall conform to the details and notes shown on the Drawings. All minor items implied, usually included, or required for the construction of a complete operating system shall be installed whether shown on the Drawings or not.

2.14 LINE STOPS

A. Line stops shall be designed and manufactured in accordance with AWWA C515, latest edition. Line stops shall consist of a resilient seated insertion valve with a minimum working pressure of 200 psi. Valves shall be iron body resilient seat type with O-ring stem seals. The valve stem, stem nut, glands, and bushings shall be bronze. A 2-inch square wrench nut and a non-rising stem shall be provided. Interior ferrous surfaces of valve, except for finished or bearing surfaces, shall be coated with a fusion bonded or thermo-setting epoxy coating in accordance with AWWA C550, latest edition. Coating shall be holiday-free, NSF approved with a minimum thickness of 10 mils. Surfaces shall be clean, dry, and free from rust and grease before coating. Exterior surfaces shall be coated as specified hereinafter. Line stops shall be manufactured by Occlude, JCM, or approved equal.

2.15 PVC BALL VALVES

A. All PVC ball valves 1/2-inch through 4-inch in size shall be of one piece capsule type manufactured of Type 1, Grade 1 PVC. Ball valves shall be true union design with two-way blocking capability and shall have solvent welded socket or NPT threaded ends.

B. Ball valves shall be supplied with ABS lever operating handles. All PVC ball check valves shall have Teflon seats and Viton O-ring seals, and shall be designed for a 150 psi water working pressure at 120°F.

C. PVC ball valves shall be of Type 1 Grade 1 PVC and shall have union ends on both sides of the valves. Ball valves shall be rated for a working pressure of 150 psi at 120° F.

D. All PVC ball valves shall be manufactured by Asahi/America, Celanese Piping Systems, Inc., Chemtrol, Plastiline, Inc., or an equal approved by the Engineer.

2.16 FLANGED ADAPTER COUPLINGS WITH HARNESSES

A. Adapters shall be suitable for joining plain-end pipe to flanged pipes and fittings. Adapters shall conform in size and bolt hole placement to ANSI standards for steel and/or cast iron flanges, 125 or 150 pound standard, unless otherwise required for connections (ANSI B16.1 125 lb./ANSI B16.5 150 lb.).

B. Adapters shall be constructed of steel and coated in accordance with Section 09900. Bolts and nuts shall be Type 316 stainless steel conforming to ASTM A193, Grade B8 for bolts, and ASTM A194, Grade 8 for nuts and washers. Bolts and nuts greater than 1 1/8 inches in diameter shall be carbon steel ASTM A307, Grade B, with cadmium plating, ASTM A165, Type NS. Gasket material shall be

suitable for exposure to the liquids to be contained within the pipes. All adapters shall be restrained with set screws to prevent axial movement. The restraint system shall be rated for a working pressure of at least 150 psi.

C. Provide limit restraint/thrust bolt harness assemblies for all flanged adapter couplings. Flange adapter couplings 6 inches and larger in size shall have a minimum of four restraint bolts on harness. Restraint bolts and nuts shall be Type 316 stainless steel.

D. Adapters shall be Dresser, EBBA Iron, Ford Meter Box Company, Smith Blair, or equal.

2.17 FLEXIBLE EXPANSION JOINTS

A. Flexible expansion joints shall be of the molded wide single arch design manufactured of neoprene rubber with polyester and steel reinforcement. Neoprene body shall be supplied with a Hypalon coating. Joints shall be flanged, suitable for 150 psi water working pressure, and in accordance with ANSI B16.1 dimensions and bolting patterns. Flanged ends shall be furnished with galvanized, split ductile iron retaining rings.

B. Provide limit restraint rods on all lines as shown on the Drawings.

C. Minimum performance for flexible expansion joints shall be as follows:

Size (In.)	Axial Compression (Inches)	Axial Elongation (Inches)	Lateral Deflection (Inches)	Angular Deflection Degrees
2	7/8	1/2	1	30
4	7/8	1/2	1	30
6	7/8	1/2	1	25
8	1-3/8	3/4	1	25

D. Manufacturer of expansion joints shall be Red Flex or approved equal.

2.18 SWING CHECK VALVES

A. Swing check valves 2-inch through 24-inch in size shall conform to AWWA C508, latest revision, and shall be designed for a minimum water working pressure of 150 psi. Check valves shall have cast iron body, swing type design, and ends shall be flanged, Class 125 in accordance with ANSI B16.1. When open, the valve shall have a straight way passage with a minimum flow area equal to the full pipe area. Swing check valves shall be completely bronze fitted with renewable bronze seat ring and a rubber faced disc. Valve hinge pin shall be stainless steel. Check valves shall be supplied with an outside lever and weight.

The check valve bonnet shall be provided with a tapped boss with plug for future installation of a pressure gauge.

B. Each check valve for the WAS pumps shall be oil cushioned such that it opens smoothly on pump start-up and closes at a controlled rate of speed for the final predetermined portion of its stroke following pump shut-down. A single cushioning device mounted on the external side of the valve shall control the valve closure by way of the interchange of oil to and from an oil reservoir. The use of an air or gas pressurized oil reservoir shall not be permitted. On start-up of the pump, the check valve disc shall open in response to the flow and then afford the minimum resistance to the flow. Upon pump shut-down, the valve's counterweight shall initiate the valve closure at an unrestricted rate until the valve disc reaches the preselected point of closure. The point at which the adjustable closing speed occurs shall be field-adjustable. The closing speed shall also be adjustable in the field by way of a micrometer type needle valve.

C. Swing check valves shall absolutely prevent the return of fluids back through the valve when the inlet pressure decreases below the downstream pressure. The check valve shall be constructed such that the disc and body seat ring may be easily removed and replaced without removing the valve from the line. Each valve shall be hydrostatically tested at the factory, at a test pressure of 300 psi.

D. Prior to shipment from the factory, the interior ferrous surfaces of the valve, except for finished, non-ferrous, or bearing surfaces, shall be coated with a fusion bonded or thermosetting epoxy coating in accordance with AWWA C550, latest revision. Coating shall be holiday-free, NSF approved, with a minimum thickness of 16 mils. Surfaces shall be clean, dry, and free from rust and grease before coating.

E. All exterior surfaces of swing check valves shall be clean, dry, and free from rust and grease before coating. Exterior ferrous parts of all valves shall be shop primed at the factory with one coat, minimum dry film thickness of 4 mils, of a rust inhibitive, universal primer. Primer shall suitable for finish paint specified. Following installation, valves shall be finish painted in accordance with Section 09900: Painting.

F. Where shown on the electrical drawings, check valves shall be provided with a NEMA 4X limit switch mounted on the horizontal centerline of the body seat or through the cover mounted on a mechanical position indicator.

G. Valve Manufacturer: Mueller, Clow, or approved equal.

2.19 PRESSURE GAUGE ASSEMBLIES

A. Pressure gauges shall be installed on each discharge pipe as indicated on the Drawings. Each pressure gauge shall be direct mounted, diaphragm seal, stainless steel case, stainless steel sensing element, liquid filled, with a 4-1/2-inch diameter dial and furnished with a clear glass crystal window, 1/4-inch shut-off (isolation) valve. Gauges shall be weatherproofed. The face dial shall be white finished aluminum with jet-black graduations and figures. The face dial shall indicate the units of pressure measured in psi, with a 0-50 psi range.

B. Pressure gauge manufacturers shall be as specified in Appendix "D", List of Approved Products.

PART 3 - EXECUTION

3.01 INSPECTION

A. All pipe, fittings, valves, and other material shall be subject to inspection and approval by the Engineer after delivery, and no broken, cracked, imperfectly coated, or otherwise damaged or unsatisfactory material shall be used. When a defect or crack is discovered, the injured portion shall not be installed. Cracked pipe shall have the defect cut off at least 12 inches from the break in the sound section of the barrel.

3.02 GENERAL INSTALLATION REQUIREMENTS

A. Excavation, backfill, and compaction shall conform to the provisions of Division 2. Upon satisfactory installation of the pipe bedding material as specified in Division 2, a continuous trough for the pipe barrel and recesses for the pipe bells or couplings shall be excavated by hand digging. When the pipe is laid in the prepared trench, true to line and grade, the pipe barrel shall receive continuous, uniform support and no pressure will be exerted on the pipe joints from the trench bottom.

B. Cover for underground piping shall not be less than that indicated on the Drawings. The minimum cover for pipe shall be 36 inches. In areas where other piping conflicts preclude the maximum cover desired, the piping shall be laid to provide the maximum cover obtainable.

C. Pipe, fittings, valves, and accessories shall be installed as shown or indicated on the Drawings.

D. All connections to existing piping systems shall be made as shown or indicated on the Drawings after consultation and cooperation with authorities of the Owner.

Some such connections may have to be made during off-peak hours (late night or early morning).

E. Pipe Joint Deflection: Whenever it is desirable to deflect pipe joints to avoid obstructions or to maintain required alignment, the amount of the joint deflection shall not exceed 80 percent of the maximum limits allowed by the pipe manufacturer.

F. In preparation for pipe installation, placement (stringing) of pipe should be as close to the trench as practical on the opposite side of the trench from the excavated material. The bell ends of the pipe should point in the direction of the work progress.

G. Pipe and fittings shall be laid accurately to the lines and grades indicated on Drawings or required. Where grades for the pipeline are not indicated on the Drawings, maintain a uniform depth of cover with respect to finish grade. Care shall be taken to insure a good alignment both horizontally and vertically and to give the pipe a firm bearing along its entire length. Any pipe which has its grade or joint disturbed after laying shall be taken up and relayed.

H. All pipe and fittings shall be cleared of sand, dirt, and debris before laying. All precautions shall be taken to prevent sand, dirt, or other foreign material from entering the pipe during installation. If necessary, a heavy, tightly woven canvas bag of suitable size shall be placed over each end of the pipe before lowering into the trench and left there until the connection is made to the adjacent pipe. Any sand, dirt, or other foreign material that enters the pipe shall be removed from the pipe immediately. Interior of all pipe and fittings shall be kept clean after installation until accepted in the complete Work.

I. Any time that pipe installation is not in progress, the open ends of pipe shall be closed by a watertight plug or other method approved by the Engineer. Plugs shall remain in pipe ends until all water is removed from the trench. No pipe shall be installed when trench conditions are unsuitable for such work, including standing water, excess mud, or rain.

J. After pipe has been laid, inspected, and found satisfactory, sufficient backfill shall be placed along the pipe barrel to hold the pipe securely in place while conducting the preliminary hydrostatic test. No backfill shall be placed over the joints until the preliminary test is satisfactorily completed, leaving them exposed to view for the detection of visible leaks.

K. Upon satisfactory completion of the hydrostatic test, backfilling of the trench shall be completed.

L. Above-ground and Exposed Piping: Piping shall be cut accurately to measurements established at the job site and shall be worked into place without springing or forcing, properly clearing all equipment access areas and openings. Changes in sizes shall be made with appropriate reducing fittings. Pipe connections shall be made in accordance with the details shown and manufacturer's recommendations. Open ends of pipe lines shall be properly capped or plugged during installation to keep dirt and other foreign material out of the system. Pipe supports and hangers shall be provided where indicated or as required to insure adequate support of the piping.

M. Existing water services shall remain in service until all new pipe construction and clearances are completed. Contractor shall notify before abandoning existing water mains.

3.03 INSTALLATION OF PVC PIPE

A. Storage and Handling:

1. PVC pipe shall be delivered to the site in unbroken bundles packaged in such manner as to provide protection against damage. When possible, pipe should be stored at the job site in the unit packages until ready for use. Packaged units shall be handled using a forklift or a spreader bar with fabric straps. Packaged units shall not be stacked at the job site higher than two units high.

2. When it is necessary to store PVC pipe for long periods of time, exposure to direct sunlight shall be prevented by covering the pipe with an opaque material. Adequate air circulation above and around the pipe shall be provided as required to prevent excessive heat accumulation. PVC pipe shall not be stored close to heat sources of hot objects such as heaters, fires, boilers, or engine exhaust. Pipe gaskets shall be protected from excessive exposure to heat, direct sunlight, ozone, oil, and grease. The interior and all sealing surfaces of pipe, fittings, and other appurtenances shall be kept clean and free of dirt and foreign matter.

3. Care shall be taken in handling and laying pipe and fittings to avoid severe impact blows, crushing, abrasion damage, gouging, or cutting. Pipe shall be lowered, not dropped, from trucks or into trenches. All cracked, damaged or defective pipe and fittings, or any length of PVC pipe having a gouge, scratch, or other permanent indentation of more than 10 percent of the wall thickness in depth, shall be rejected and removed at once from the Work and replaced with new acceptable pipe at no additional cost to the Owner.

B. Field Cutting PVC Pipe: Field cutting of pipe shall be done in a neat workmanlike manner without creating damage to the pipe. The pipe shall be cut square with a fine-toothed hand or power saw or other cutter or knife designed for use with plastic pipe. Prior to cutting, the pipe shall be marked around its entire circumference or a square-in vise shall be used to ensure the pipe end is cut square. Remove burrs by smoothing edges with a knife, file, or sandpaper.

C. Field Cutting Bell and Spigot PVC Pipe: Bevel the cut end of the pipe using a pipe beveling tool, wood rasp, or portable sander to prevent damage to the gasket during joint assembly. A factory-finished beveled end should be used as a guide to ensure proper beveling angle and correct depth of bevel. Round off any sharp edges on the leading edge of the bevel with a knife or file.

D. Laying PVC Pipe:

1. Pipe Bedding: Bedding for PVC pipe shall be as specified in Division 2 using granular pipe bedding material.

2. All PVC pipe shall be laid in accordance with the pipe manufacturer's published installation guide, the AWWA Manual of Practice No. M23 "PVC Pipe - Design and Installation" and the Uni-Bell Plastic Pipe Association installation recommendations.

E. PVC Pipe Joint Assembly for Rubber Gasketed Bell and Spigot Pipe:

1. The PVC bell and spigot joint shall be assembled in accordance with the pipe manufacturer's installation instructions, ASTM D2774, and AWWA Manual M23. Clean the interior of the bell, the gasket, and the spigot of the pipe to be jointed with a rag to remove any dirt or foreign material before assembling. Inspect the gasket, pipe spigot bevel, gasket groove, and sealing surfaces for damage or deformation.

2. Lubricate the spigot end of the pipe with a lubricant supplied or specified by the pipe manufacturer for use with gasketed PVC pipe in potable water systems. The lubricant should be supplied as specified by the pipe manufacturer. After the spigot end is lubricated, it must be kept clean and free of dirt and sand. If dirt and sand adhere to the lubricated end, the spigot must be wiped clean and relubricated.

3. Insert the spigot into the bell so that it contacts the gasket uniformly. Align the pipe sections and push the spigot end into the bell until the manufacturer's reference mark on the spigot is flush with the end of the bell. The pipe should be pushed into the bell using a bar and wood block. The joint shall not be assembled by "stabbing" or swinging the pipe into

the bell, nor shall construction machinery be used to push the pipe into the bell.

4. If undue resistance to insertion of the spigot end is encountered or if the reference mark does not reach the flush position, disassemble the joint and check the position of the gasket. If the gasket is twisted or pushed out of its seat, inspect the components, repair or replace damaged items, clean the components, and repeat the assembly steps. Be sure the pipe is in proper alignment during assembly. If the gasket was not out of position, check the distance between the spigot end and the reference mark and relocate the mark if it is out of position.

F. PVC Pipe Joint Assembly for Threaded and Solvent Welded Pipe:

1. All threaded and solvent welded joints shall be made watertight in accordance with ASTM D2855, ASTM D2564, and AWWA Manual M23. All pipe cutting, threading, and jointing procedures for threaded and solvent welded PVC pipe joints shall be in strict accordance with the pipe and fitting manufacturer's printed installation instructions. Thread lubricant for threaded joints shall be Teflon tape only.

2. At threaded joints between PVC and metal pipes, the metal side shall contain the socket end and the PVC side the spigot. A metal spigot shall not, under any circumstances, be screwed into a PVC socket.

G. All glands, clamps, bolts, nuts, studs, and other uncoated parts of fitting joints for underground installation shall be coated with two coats, 10 mils DFF per coat, of coal tar epoxy equal to Kop-Coat Bitumastic No. 300-M.

3.04 INSTALLATION OF VALVES

A. Valves of the size and type shown on the Drawings shall be set plumb and installed at the locations indicated on the Drawings. Valves shall be installed in accordance with manufacturer's installation instructions and with the details shown on the Drawings.

B. Valves shall be installed such that they are supported properly in their respective positions, free from distortion and strain. Valves shall be installed such that their weight is not borne by pumps and equipment that are not designed to support the weight of the valve.

C. Valves shall be carefully inspected during installation; they shall be opened wide and then tightly closed and the various nuts and bolts shall be tested for tightness. Special care shall be taken to prevent any foreign matter from becoming lodged in the valve seat. Check and adjust all valves for smooth operation.

D. Install valves with the operating stem in either horizontal or vertical position.

E. Allow sufficient clearance around the valve operator for proper operation.

F. Clean iron flanges by wire brushing before installing flanged valves. Clean carbon steel flange bolts and nuts by wire brushing, lubricate threads with oil or graphite, and tighten nuts uniformly and progressively. Clean threaded joints by wirebrushing or swabbing. Apply Teflon joint compound or Teflon tape to pipe threads before installing threaded valves. Joints shall be watertight.

G. For buried valves, a valve box shall be centered accurately over the operating nut and the entire assembly shall be plumb. The tops of valve boxes shall be adjusted to the proper elevation as specified below and as shown on the Drawings.

1. In paved areas, tops of valve box covers shall be set 1/4-inch below pavement. Following paving operations, an 18-inch square shall be neatly cut in the pavement around the box and the paving removed. The top of the box shall then be adjusted to the proper elevation and an 18-inch square by 6-inch thick concrete pad poured around the box cover. Concrete pads in traffic areas shall be reinforced with No. 4 reinforcement bars as shown on the Drawings. Concrete for the pad shall be 3,000 psi compressive strength at 28 days.

2. In unpaved areas, tops of valve box covers shall be set 2 inches above finished grade. After the top of the box is set to the proper elevation, a 18-inch square by 6-inch thick concrete pad shall be poured around the box cover. Concrete for the pad shall be 3,000 psi compressive strength at 28 days.

3. The concrete pad for the valve box cover shall have a 3-inch diameter, bronze identification disc embedded in the concrete surface as shown on the Drawings. The bronze identification disc shall be as specified in Section 09905 and shall have the information as shown on the Drawings neatly stamped on it.

H. Valves shall be tested hydrostatically, concurrently with the pipeline in which they are installed. Protect or isolate any parts of valves, operators, or control and instrumentation systems whose pressure rating is less than the pressure used for the pressure test(s). If valve joints leak during pressure testing, loosen or remove the nuts and bolts, reseat or replace the gasket, reinstall or retighten the bolts and nuts, and hydrostatically retest the joints.

3.05 HYDROSTATIC PRESSURE AND LEAKAGE TESTING - See Section 15044

3.06 OBTAINING POTABLE WATER FOR TESTING AND FLUSHING

A. The potable water supply shall be protected with an air gap and a reduced pressure principle backflow preventer approved by the Owner, if potable water is used for testing and flushing.

B. To obtain potable water service during construction, the Contractor shall be required to install a temporary water meter. The piping, fittings, backflow preventer, and appurtenances required for the temporary construction water service shall be supplied by the Contractor.

C. The Contractor shall coordinate with the Owner for temporary construction water service connection, usage, and flushing.

3.07 MAIN CLEANING AND FLUSHING

A. Following the hydrostatic and leakage tests, all the mains constructed under this contract shall be cleaned and flushed to remove sand, loose dirt, and other debris. Flushing velocity shall be a minimum of 2.5 fps. Flushing shall continue until clean water flows from the main. However, the Contractor shall endeavor to use the minimum amount of flushing water required to complete the work. To increase the efficiency of the cleaning and flushing operation, the Contractor shall use a pipeline pigging device of the proper size designed to clean the intended pipeline. The pigging device shall be capable of turning through a standard 90 degree MJ bend. The type of pipeline pigging device and the method of operation shall be approved by the Engineer.

B. Upon completion of testing for the gravity drain line system, drain lines shall be flushed to remove dirt, sand, stones, and other debris which may have entered the lines during construction and settled out in the lines. Materials and debris flushed from the drain lines shall be removed from a downstream lift station and disposed of at an approved disposal area.

C. Temporary blowoffs may be required for the purpose of flushing mains. Temporary blowoffs shall be installed as close as possible to the ends of the main being flushed. Blowoffs installed on the main shall be the same diameter as the main. Temporary blowoffs shall be removed and plugged after the main is flushed. All costs for installing and removing temporary blowoffs shall be at no additional cost to the Owner.

D. The Owner shall be notified at least 72 hours prior to flushing mains.

E. Blowoffs and temporary drainage piping used for flushing shall not be discharged into any gravity sewer or pumping station wetwell. The Contractor shall obtain prior approvals from the Engineer and the Owner as to the methods and locations of flushing water discharge.

3.08 FINAL DISINFECTION FOR POTABLE WATER PIPELINES

A. Before any portion of the potable water piping system is to be placed in service, it shall be disinfected; and its disinfection shall be demonstrated by bacteriological tests conducted in accordance with "Standard Methods for Examination of Water and Sewage" for the coli-aerogenes group, by an approved laboratory, acceptable to the Engineer and the County Health Department.

B. All pipe, fittings, valves, and all other appurtenances installed for potable water lines shall be disinfected prior to being placed in service. Disinfection procedures shall be approved by the Engineer and shall be in conformance with ANSI/AWWA C651, latest revision.

C. Pipe subjected to contaminating materials shall be treated in a manner approved by the Engineer. Should such treatment fail to remove contaminants from the pipe, contaminated sections of pipe shall be replaced with new uncontaminated pipe at no additional cost to the Owner.

D. Disinfection of a completed line shall be accomplished using the following procedure:

1. All potable water piping, fittings, valves, and appurtenances shall be disinfected with a chlorine solution with a sufficient concentration such that the initial chlorine concentration in the water line shall be a minimum of 50 mg/l available chlorine, at any point in the line.

2. Chlorine used for the purpose of disinfection shall be high test granular calcium hypochlorite which contains approximately 65 to 70 percent available chlorine by weight. The calcium hypochlorite shall be stored in a cool, dry, and dark environment, prior to its use, to minimize deterioration. The dry calcium hypochlorite will be used to makeup a high concentration chlorine solution which will be used for disinfection. Under no circumstances will undiluted, dry calcium hypochlorite be placed in the pipeline to be disinfected.

3. Water from the existing, in-service water line shall be made to flow at a constant, slow rate into the water line to be disinfected. Chlorine solution shall be injected or pumped at a regulated rate into the new main, at a point not more than 10 feet downstream from the beginning of the new water main. The method of tapping the water main for the chlorine

injection point and the location of the tap shall be approved by the Engineer.

4. Chlorine solution shall be circulated in the water main by opening the water control valve and systematically manipulating valves and blowoffs.

5. Water service lines shall be disinfected in a similar manner as that for water mains, including corrective measures, by methods acceptable to the Engineer.

6. Chlorine solution shall remain in the water lines for no less than 24 hours, but longer than 24 hours if directed by the Engineer.

7. Extreme care shall be exercised at all times to prevent concentrated chlorine solution from entering existing water mains.

E. After 24 hours, the free residual chlorine concentration in the water line at the pipe extremities shall be at least 25 mg/l; if not, the water lines shall be redisinfected as described above.

F. Final flushing of lines may proceed after 24 hours, provided the free residual chlorine analysis is satisfactory. Flushing shall be continued until a chlorine residual test shows that lines contain only the normal chlorine residual. Prior to flushing water with high chlorine concentrations, obtain approvals from the Engineer and the Owner as to the methods and locations of discharge.

G. Following disinfection and thorough flushing of the water lines, as specified herein, the Contractor shall furnish all labor and materials required to obtain samples of water from established points of the water line in suitable sterilized containers obtained from the County Health Department or approved analytical laboratory. Contractor to pay for all required testing. Two (2) series of successive samples shall be obtained at each established sampling points. Each test series will require two samples at each sampling point. The period between each series of samples shall be a minimum of 24 hours. Samples shall be delivered by the Contractor to the County Health Department or approved analytical laboratory for bacteriological examination. Samples shall be collected in conformance with the County Health Department standards and lab testing schedule. Prior to collecting samples, the Contractor shall notify the Engineer and the Owner who will have representatives present during sample collection.

H. Bacteriological test results will be available approximately 48 to 72 hours after samples are submitted. If tests results are unsatisfactory, the Contractor shall immediately rechlorinate and retest the water lines and proceed with such corrective measures as are necessary to secure disinfected lines. All services shall be rechlorinated if the lines are rechlorinated. The water lines shall be

redisinfected and retested, at the Contractor's expense, until approved by the Engineer, and the County Health Department.

I. At satisfactory completion of the bacteriological test requirements, potable water lines shall be placed in service in a manner approved by the Engineer and the Owner. Contractor shall notify the Engineer and the Owner 72 hours prior to placing lines in service.

3.09 CONNECTION TO EXISTING WATER SYSTEMS

A. The Contractor shall coordinate making connection of the new mains to mains which are in service at the time of construction with the Owner. The Contractor shall not connect to existing facilities unless the Engineer and a representative of the Owner are present. The Engineer and the Owner shall be notified at least 48 hours prior to the time connection is desired.

B. Operation of all system valves shall be the responsibility of the Owner's personnel only. At no time shall the Contractor operate any system valves. System valves shall be defined as any valve which has main pressure against either side of the valve. The Contractor shall notify the Owner to request that a valve be operated, at least 48 hours prior to the time operation is required.

END OF SECTION

CITY OF DELTONA, FL
TIPTON DRIVE
STORMWATER IMPROVEMENTS

201 EAST PINE STREET, SUITE 1000
ORLANDO, FL 32801
PHONE: (407) 839-3955 FAX: (407) 839-3790
www.tetratech.com

TETRA TECH

CONSTRUCTION DRAWINGS
FOR
CITY OF DELTONA

PROJECT LOCATION:
DELTONA, FL

CLIENT INFORMATION:
CITY OF DELTONA, FL

Tt PROJECT No.:
200-08534-12007

CLIENT PROJECT No.:

PROJECT DESCRIPTION / NOTES:

ISSUED:
BID SET

FOR CITY OF DELTONA

MAYOR
JOHN C. MASIARCZYK, SR.

VICE MAYOR
ZENAIDA DENIZAC
DISTRICT 1

CITY MANAGER
FAITH G. MILLER

DEPUTY CITY MANAGER
DAVE DENNY

PUBLIC WORKS DIRECTOR
GLENN WHITCOMB

COMMISSIONERS

WEBSTER BARNABY
DISTRICT 2

HEIDI HERZBERG
DISTRICT 3

NANCY SCHLEICHER
DISTRICT 4

FRED LOWRY, JR.
DISTRICT 5

CHRIS NABICHT
DISTRICT 6

I'm Proud To Be A Part Of It! City of Deltona Incorporated December 31, 1995

SHEET INDEX

SHEET NUMBER	DESCRIPTION
GENERAL	
G-000	COVER
G-001	GENERAL NOTES
CIVIL	
C-101	PLAN & PROFILE
C-102	PLAN & PROFILE
C-103	PLAN & PROFILE
DETAILS	
C-501	DETAILS
C-502	DETAILS
C-503	DETAILS
C-504	DETAILS

VICINITY MAP:

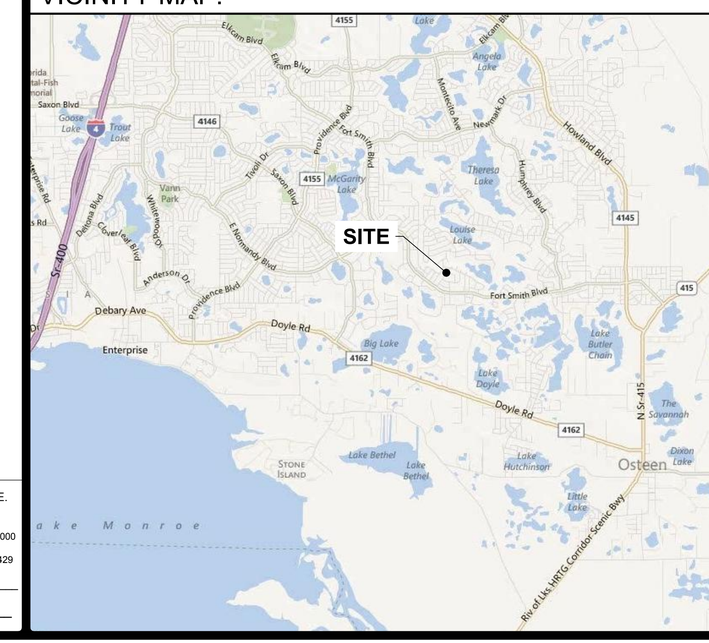

48 HOURS BEFORE DIGGING
CALL
TOLL FREE
1-800-432-4770
SUNSHINE STATE ONE CALL CENTER

Michael B. Saxton, P.E.
P.E. No. 71506, FL
201 East Pine Street, Suite 1000
Orlando, Florida 32801
Engineering Business No. 2429

DATE_____

GENERAL NOTES

GENERAL:

1. BENCHMARK FOR CONSTRUCTION HAS BEEN PROVIDED ON SHEETS C-101, C-102 AND C-103.
2. ALL LABOR, MATERIALS, AND METHODS OF CONSTRUCTION SHALL BE IN STRICT ACCORDANCE WITH THE MINIMUM ENGINEERING AND CONSTRUCTION STANDARDS ADOPTED BY THE CITY OF DELTONA. WHERE CONFLICTS OR OMISSIONS EXIST, THE CITY OF DELTONA STANDARDS SHALL DICTATE. SUBSTITUTIONS AND DEVIATION FROM PLANS AND SPECIFICATIONS SHALL BE PERMITTED ONLY WHEN WRITTEN APPROVAL HAS BEEN ISSUED BY THE ENGINEER.
3. SHOP DRAWINGS OF ALL MATERIALS BEING USED SHALL BE SUBMITTED TO THE ENGINEER FOR APPROVAL PRIOR TO INSTALLATION.
4. ALL MATERIALS AND CONSTRUCTION TO BE IN ACCORDANCE WITH DELTONA WATER STANDARDS AND SPECIFICATIONS FOR WATER AND WASTEWATER CONSTRUCTION LATEST EDITION, UNLESS OTHERWISE WAIVED.
5. IT WILL BE THE RESPONSIBILITY OF THE CONTRACTOR TO ENSURE THAT ALL REQUIRED PERMITS ARE OBTAINED AND IN HAND BEFORE BEGINNING ANY CONSTRUCTION. NO CONSTRUCTION OR FABRICATION OF ANY ITEM SHALL BEGIN UNTIL THE CONTRACTOR HAS RECEIVED ALL PLANS AND ANY OTHER DOCUMENTATION FROM ALL OF THE PERMITTING AND ANY OTHER REGULATORY AUTHORITIES. ANY PENALTIES, STOP WORK ORDERS OR ADDITIONAL WORK RESULTING FROM THE CONTRACTOR BEING IN VIOLATION OF THE REQUIREMENTS ABOVE, SHALL BE FULLY BORNE BY THE CONTRACTOR.
6. THE LOCATION OF ALL EXISTING UTILITIES, GAS, POWER, WATER, SEWER, PHONE AND STORM DRAINAGE SHOWN ON THE PLANS HAVE BEEN DETERMINED FROM THE BEST INFORMATION AVAILABLE AND ARE GIVEN FOR THE CONVENIENCE OF THE CONTRACTOR. THE ENGINEER ASSUMES NO RESPONSIBILITY FOR INACCURACY. PRIOR TO THE START OF ANY CONSTRUCTION ACTIVITY IT SHALL BE THE CONTRACTOR'S RESPONSIBILITY TO NOTIFY THE VARIOUS UTILITIES AND TO MAKE THE NECESSARY ARRANGEMENTS FOR ANY RELOCATION OF THESE UTILITIES WITH THE OWNER OF THE UTILITY. THE CONTRACTOR SHALL EXERCISE CAUTION WHEN CROSSING UNDERGROUND UTILITIES, WHETHER SHOWN ON THE PLANS OR LOCATED BY THE UTILITY COMPANY. ALL UTILITIES WHICH INTERFERE WITH THE PROPOSED CONSTRUCTION SHALL BE BROUGHT TO THE ATTENTION OF THE ENGINEER FIRST. ANY FEES ASSOCIATED WITH UTILITY RELOCATIONS SHALL BE BORNE IN ACCORDANCE WITH RESPECTIVE UTILITY COMPANY STANDARDS. IF IT IS REQUESTED UTILITY COMPANIES MOVE THEIR PARTICULAR UTILITIES, ANY DELAY OR INCONVENIENCE CAUSED TO THE CONTRACTOR BY THE RELOCATION OF THE VARIOUS UTILITIES SHALL BE INCIDENTAL TO THE CONTRACT AND NO EXTRA COMPENSATION WILL BE ALLOWED.
7. THE CONTRACTOR SHALL SCHEDULE A PRECONSTRUCTION MEETING TO BE HELD BETWEEN CITY OF DELTONA, UTILITIES, ENGINEER OF RECORD, AND CONTRACTOR PRIOR TO COMMENCEMENT OF CONSTRUCTION.
8. THE SEQUENCE OF CONSTRUCTION SHALL BE SUCH THAT ALL UNDERGROUND INSTALLATIONS OF EVERY KIND, INCLUDING LANDSCAPE IRRIGATION LINES, SHALL BE PLACED BENEATH THE PAVEMENT AND ITS EDGES PRIOR TO THE CONSTRUCTION OF THE PAVEMENT. THE PAVEMENT SHALL NOT BE CUT WITHOUT PRIOR APPROVAL OF THE ENGINEER.
9. THE CONTRACTOR SHALL NOTIFY THE ENGINEER AT LEAST 48 HOURS PRIOR TO BEGINNING CONSTRUCTION AND AT LEAST 48 HOURS HOURS BEFORE REQUIRED INSPECTION ON EACH AND EVERY PHASE OF WORK. THE CONTRACTOR SHALL NOTIFY THE ENGINEER A MINIMUM OF 48 HOURS NOTICE PRIOR TO ANY SCHEDULED TESTING. NO PRESSURE TESTING, OR FINAL TESTING WILL BE ACCEPTED UNLESS WITNESSED BY THE ENGINEER'S REPRESENTATIVE.
10. ALL CONTRACTORS, CITY REPRESENTATIVES, COUNTY REPRESENTATIVES, AND UTILITY COMPANIES ARE RESPONSIBLE FOR THEIR RESPECTIVE SURVEYING AND LAYOUT FROM BENCHMARK PROVIDED ON CONSTRUCTION PLANS. ANY SURVEY MONUMENTATION DISTURBED DURING CONSTRUCTION SHALL BE REPLACED UPON COMPLETION OF THE WORK BY A REGISTERED LAND SURVEYOR.
11. THE CONTRACTOR SHALL BE RESPONSIBLE FOR PREVENTING ANY CONSTRUCTION ACTIVITIES FROM TAKING PLACE OUTSIDE OF THE LIMITS OF CONSTRUCTION SHOWN ON THE PLANS. ANY ON-SITE OR OFFSITE AREAS DISTURBED SHALL BE RESTORED TO ORIGINAL CONDITION OR BETTER.
12. THE CONTRACTOR SHALL MAINTAIN A CURRENT SET OF CONSTRUCTION PLANS AND ALL PERMITS ON THE JOB SITE DURING ALL PHASES OF CONSTRUCTION. THE CONTRACTOR SHALL PROVIDE TOTAL OF SIX (6) SETS OF RECORD DRAWINGS TO THE ENGINEER OF RECORD WITHIN TWO (2) WEEKS AFTER CONSTRUCTION HAS BEEN COMPLETED ON EACH PHASE.
13. TOPOGRAPHIC INFORMATION SHOWN ON THESE PLANS WERE TAKEN FROM SURVEY PROVIDED BY: TETRA TECH, 201 E. PINE ST., SUITE 1000, ORLANDO, FL 32801. THE DATUM IS NAVD 88.
14. THE CONTRACTOR SHALL BE RESPONSIBLE FOR OBTAINING THE NECESSARY TESTING TO ASSURE THAT THE PROPER COMPACTION HAS BEEN ACHIEVED ON THE SUBGRADE, BASE, AND ALL OTHER PERTINENT AREAS THAT HAVE BEEN COMPLETED. THE CONTRACTOR SHALL BEAR ALL COSTS ASSOCIATED WITH TESTING AND RETESTING OF THE AREAS AND SHALL PROVIDE THE OWNER AND THE ENGINEER WITH COPIES OF THE CERTIFICATION OF COMPACTION FROM THE TESTING COMPANY.
15. IT IS THE CONTRACTOR'S RESPONSIBILITY TO DETERMINE EXISTING SITE CONDITIONS OF SOIL PRIOR TO N.T.P. CONTRACTOR TO DETERMINE IF ANY OFF SITE MATERIALS WILL NEED TO BE IMPORTED TO ACHIEVE THE GRADES SPECIFIED ON THE PLANS.
16. ALL EXCESS FILL FROM SITE SHALL BE STOCKPILED BY THE CONTRACTOR, IN A LOCATION DETERMINED BY THE OWNER OR THE OWNER'S REPRESENTATIVE AND THE ENGINEER.
17. AREAS INDICATED FOR CLEARING SHALL BE COMPLETELY CLEAR OF ALL TIMBER, BRUSH, STUMPS, ROOTS, GRASS, WEEDS, RUBBISH, AND ALL OTHER DEBRIS AND OBSTRUCTIONS RESTING ON OR PROTRUDING THROUGH THE SURFACE OF THE GROUND.
18. PRIOR TO BID PREPARATION, THE CONTRACTOR MUST BECOME FAMILIAR WITH THE OVERALL SITE CONDITIONS AND PERFORM ADDITIONAL INVESTIGATIONS AS DETERMINED NECESSARY TO UNDERSTAND THE LIMITS AND DEPTHS OF UNSUITABLE MATERIAL AREAS, ADEQUACY OF EXISTING MATERIALS AS FILL, DEWATERING REQUIREMENTS, CLEAN FILL REQUIRED FROM OFFSITE, AND MATERIALS TO BE DISPOSED OF OFFSITE, ALL OF WHICH WILL AFFECT HIS PRICING. ANY DELAY, INCONVENIENCE, OR EXPENSE CAUSED TO THE CONTRACTOR DUE TO INADEQUATE INVESTIGATION OF EXISTING CONDITIONS SHALL BE INCIDENTAL TO THE CONTRACT, AND NO EXTRA COMPENSATION WILL BE ALLOWED. THE MATERIALS ANTICIPATED TO BE ENCOUNTERED DURING CONSTRUCTION MAY REQUIRE DRYING PRIOR TO USE AS BACKFILL, AND THE CONTRACTOR MAY HAVE TO IMPORT MATERIALS, AT NO EXTRA COST, FROM OFFSITE TO MEET THE REQUIREMENTS FOR COMPACTION AND PROPER FILL.

DEMOLITION:

1. THE CONTRACTOR SHALL OBTAIN NECESSARY PERMITS AND LICENSES FOR PERFORMING THE DEMOLITION WORK AND SHALL FURNISH A COPY OF SAME TO THE CITY OF DELTONA AND ENGINEER PRIOR TO COMMENCING THE WORK. THE CONTRACTOR SHALL COMPLY WITH THE REQUIREMENTS OF THE PERMITS.
2. THE CONTRACTOR SHALL NOTIFY ALL UTILITY COMPANIES OR LOCAL AUTHORITIES FURNISHING GAS, WATER, ELECTRICAL, TELEPHONE, OR SEWER SERVICE SO THEY CAN REMOVE, RELOCATE, DISCONNECT, CAP OR PLUG THEIR EQUIPMENT IN ORDER TO FACILITATE DEMOLITION.
3. THE CONTRACTOR SHALL PROTECT ALL UTILITIES AND OTHER IMPROVEMENTS SHOWN ON THESE PLANS AND UTILITIES AND OTHER IMPROVEMENTS NOT SHOWN. THE CONTRACTOR SHALL ASSUME RESPONSIBILITY FOR REPAIRS OF UTILITIES AND OTHER IMPROVEMENTS DAMAGED DURING CONSTRUCTION AND SHALL MAINTAIN SUFFICIENT PROTECTION FOR ALL UTILITIES REQUIRED TO PROTECT THEM FROM DAMAGE AND TO PROTECT THE PUBLIC DURING CONSTRUCTION.
4. THE CONTRACTOR IS RESPONSIBLE FOR THE PROTECTION OF ALL TREES, STRUCTURES, AND UTILITIES NOT MARKED FOR REMOVAL OR DEMOLITION AND SHALL PROMPTLY REPAIR ANY DAMAGE AS DIRECTED BY THE ENGINEER AT NO COST TO THE OWNER.
5. THE CONTRACTOR SHALL REMOVE BUILDING STRUCTURES MARKED FOR DEMOLITION WHICH INCLUDES FOOTERS ASSOCIATED WITH THE STRUCTURE, WATER LINES TO THE METER LOCATION, LATERALS TO THE RIGHT-OF-WAY LINE (CAP PRIOR TO BACKFILLING THE TRENCH), AND UNDERGROUND ELECTRICAL WIRING NOT ASSOCIATED WITH THE APPROPRIATE POWER COMPANY.
6. THE CONTRACTOR SHALL REMOVE PAVING MARKED FOR DEMOLITION WHICH INCLUDES ALL ASPHALT, CONCRETE, BASE, AND RETAINING WALLS (INCLUDING THE FOOTERS).
7. THE CONTRACTOR SHALL REMOVE TREES MARKED FOR REMOVAL WHICH INCLUDES THE ROOTS ASSOCIATED WITH THE TREE. TREES NOT MARKED FOR REMOVAL SHALL BE PROTECTED IN ACCORDANCE WITH THE CITY OF DELTONA REGULATIONS.
8. THE CONTRACTOR SHALL REMOVE UNSALVAGEABLE MATERIALS AND YARD WASTE FROM THE SITE IMMEDIATELY AND DISPOSE OF IN ACCORDANCE WITH APPLICABLE FEDERAL, STATE, AND LOCAL REGULATIONS.
9. THE CONTRACTOR SHALL SAW-CUT A SMOOTH STRAIGHT EDGE ON ANY PAVEMENT PROPOSED FOR DEMOLITION PRIOR TO ITS REMOVAL. PRIOR TO CONNECTING PROPOSED PAVEMENT TO EXISTING PAVEMENT, THE CONTRACTOR SHALL ENSURE THAT THE EDGE OF THE EXISTING PAVEMENT IS STRAIGHT AND UNIFORM.

RESTORATION:

1. DRIVEWAYS TO BE REMOVED ARE SHOWN FOR ILLUSTRATION ONLY. THE CITY OF DELTONA REQUIRES THAT DRIVEWAYS ARE REMOVED UP TO THE EXPANSION OR CONTROL JOINT FARTHEST FROM THE EDGE OF PAVEMENT AND IS INSIDE THE PUBLIC RIGHT OF WAY.THE CONTRACTOR IS REQUIRED TO REMOVE AND REPLACE ALL DRIVEWAYS ALONG CONSTRUCTION OF THE PROPOSED IMPROVEMENTS AS INDICATED IN THE MEASUREMENT AND PAYMENTS (SECTION 1025) ITEMS FROM PIPE INSTALLATION.
2. THE CONTRACTOR SHALL BE RESPONSIBLE FOR COORDINATION WITH UTILITY COMPANY FOR ALL WORK AROUND POWER POLES. CONTRACTOR SHALL COVER ALL ASSOCIATED COSTS.

OTHER UTILITY INFORMATION:

1. THE CONTRACTOR SHALL NOTIFY UTILITY COMPANIES WHICH MAY HAVE THEIR UTILITIES WITHIN THE CONSTRUCTION AREAS TO LOCATE THEIR FACILITIES IN THE FIELD FORTY-EIGHT (48) HOURS PRIOR TO BEGINNING CONSTRUCTION.
2. DUCTILE IRON PIPE SHALL BE ENCASED IN POLYETHYLENE TWENTY-FIVE (25) FEET ON EACH SIDE OF ANY PERPENDICULAR CROSSING OF METALLIC GAS MAINS OR ANY OTHER CATHODICALLY PROTECTED PIPELINE AND FOR LOCATIONS PARALLEL TO AND WITHIN TEN FEET OF METALLIC GAS MAINS OR OTHER CATHODICALLY PROTECTED PIPE AND THROUGH THE AREA OF INFLUENCE OF CATHODIC PROTECTION ANODE BED.
3. CHAPTER 553 - 851 OF THE FLORIDA STATUTES REQUIRES THAT AN EXCAVATOR NOTIFY GAS UTILITIES A MINIMUM OF TWO (2) WORKING DAYS PRIOR TO EXCAVATING. THE DRAWINGS SHOW ONLY THE APPROXIMATE LOCATION OF GAS MAINS AND DO NOT SHOW SERVICE LINES.
4. LANDSCAPING SHALL NOT BE LOCATED WITHIN 3 FEET OF ANY FIRE HYDRANT AND/OR FIRE DEPARTMENT CONNECTION.
5. WATER FOR FIRE FIGHTING PURPOSES SHALL BE AVAILABLE PRIOR TO COMBUSTIBLES BEING BROUGHT ON SITE.
6. IMMEDIATELY AT ONSET OF CONSTRUCTION, CONTRACTOR SHALL FIELD VERIFY HORIZONTAL AND VERTICAL LOCATIONS OF ALL EXISTING UTILITIES CRITICAL TO COMPLETING THE PROJECT (INCLUDING WATER, SEWER, POWER, TELEPHONE, GAS, AND CABLE TV) AND SHALL EVALUATE POTENTIAL CONFLICTS IN A WRITTEN REPORT. ANY CONFLICTS SHALL BE REPORTED TO ENGINEER/OWNER IMMEDIATELY UPON DISCOVERY AND DETAILED IN THE REPORT. NO SITE WORK SHALL BEGIN PRIOR TO REVIEW AND ACCEPTANCE OF THE REPORT BY ORANGE COUNTY.

EARTHWORK, GRADING, STABILIZATION, PAVING AND DRAINAGE:

1. COMPACT ALL UTILITY TRENCHES PER PROJECT SPECIFICATION SECTION 02221.
2. ALL ORGANIC SOILS BELOW UTILITY TRENCHES SHALL BE REMOVED AND REPLACED WITH SUITABLE MATERIAL AND COMPACTED PER PROJECT SPECIFICATION SECTION 02221.
3. STABILIZED SUBGRADE SHALL BE IN ACCORDANCE WITH PROJECT SPECIFICATION SECTION 02574.
4. ASPHALTIC CONCRETE PER PROJECT SPECIFICATION SECTION 02574 .
5. ALL PAVEMENT MARKINGS SHALL BE REFLECTIVE PAINT (STOP BARS TO BE THERMOPLASTIC), CONTRACTOR WILL BE RESPONSIBLE FOR ALL TEMPORARY STRIPING TO BE INSTALLED.
6. ALL CONCRETE FLUMES, WALKS, AND CURBS SHALL BE CONSTRUCTED PER PROJECT SPECIFICATION SECTION 03330.
7. ALL ON-SITE AREAS DISTURBED BY THE CONSTRUCTION SHALL BE STABILIZED WITH SOD (SAME AS SURROUNDING AREA OR BETTER) OR APPROVED EQUAL PER PROJECT SPECIFICATION SECTION 02934.
8. FERTILIZER SHALL BE IN ACCORDANCE WITH PROJECT SPECIFICATION SECTION 02934.
9. MULCH SHALL BE IN ACCORDANCE WITH PROJECT SPECIFICATION SECTION 02922 .
10. SOD SHALL BE SHALL BE IN ACCORDANCE WITH PROJECT SPECIFICATION SECTION 02934.
11. THE REINFORCED CONCRETE PIPE SHALL BE IN ACCORDANCE WITH PROJECT SPECIFICATION SECTION 03612.
12. ALL PIPE CALL OUTS ARE MEASURED CENTER LINE TO CENTER LINE FOR MANHOLES AND INLETS AND FROM THE END OF THE PIPE FOR MITERED END SECTIONS.
13. ALL DEWATERING COSTS ASSOCIATED WITH THE INSTALLATION AND CONSTRUCTION OF THE UNDERGROUND UTILITIES; STORM WATER PIPES AND MANHOLES; SANITARY SEWER MAINS, FORCE MAINS, MANHOLES, AND LIFT STATIONS; AND STORM WATER MANAGEMENT SYSTEMS SHALL BE INCLUDED AS PART OF THE CONSTRUCTION BID COSTS. THE CONTRACTOR SHALL SUBMIT FOR WATER USE PERMITS IF REQUIRED FOR DEWATERING ACTIVITIES AND PERFORM DEWATERING PER PROJECT SPECIFICATION SECTION 02140 IF REQUIRED.
14. ALL PIPES SHALL HAVE 3 FEET MINIMUM COVER UNLESS OTHERWISE SPECIFIED IN PLANS, CONTRACTOR SHALL TAKE CARE TO PROVIDE PROPER GRADE ELEVATIONS AND ALIGNMENTS.
15. PLANS AND SPECIFICATIONS REQUIRE THAT COMPACTED BACKFILL BE PLACED ALONG SIDE OF AND OVER ALL UTILITIES. THE ENGINEER WILL REQUIRE THAT COMPACTION TESTS BE TAKEN TO VERIFY BACKFILL COMPACTION. THE COST OF SUCH COMPACTION TESTS WILL BE BORNE BY THE CONTRACTOR.
16. THE CONTRACTOR MUST INSTALL AND MAINTAIN GRASS OR SOD ON EXPOSED SLOPES WITHIN 48 HOURS OF COMPLETED FINAL GRADES, AS NOTED ON PLANS, AND AT ANY OTHER TIME AS NECESSARY TO PREVENT EROSION, SEDIMENTATION OR TURBID DISCHARGES TO ANY DOWNSTREAM WATER BODY, WETLAND, OR OFF-SITE PROPERTY. SODDING ON SLOPES 3:1 AND STEEPER SHALL BE STAKED.
17. THE CONTRACTOR SHALL TAKE ALL MEASURES NECESSARY TO CONTROL TURBIDITY AND SEDIMENT INCLUDING, BUT NOT LIMITED TO, THE INSTALLATION OF TURBIDITY BARRIERS AND SILT FENCES AT ALL LOCATIONS WHERE THE POSSIBILITY OF TRANSFERRING SUSPENDED SOLIDS INTO THE RECEIVING WATER BODY EXISTS DUE TO THE PROPOSED WORK. TURBIDITY AND SEDIMENT BARRIERS MUST BE MAINTAINED AT ALL LOCATIONS UNTIL CONSTRUCTION IS COMPLETED AND DISTURBED SOIL AREAS ARE STABILIZED. THE CONTRACTOR SHALL ALSO BE RESPONSIBLE FOR REMOVING THE BARRIERS. AT NO TIME SHALL THERE BE ANY OFFSITE DISCHARGE WHICH VIOLATES THE WATER QUALITY STANDARDS IN CHAPTERS 62-302 AND 62-4, FLORIDA ADMINISTRATIVE CODE.

EROSION CONTROL NOTES:

1. TEMPORARY STABILIZATION IS REQUIRED OF ALL SOIL LEFT BARE FOR GREATER THAN 14 DAYS.
2. PERMANENT SOIL STABILIZATION REQUIRED FOR ALL RESTORATION. THE LIMITS OF SOD SHOWN IN THE DRAWINGS ARE FOR ILLUSTRATION ONLY. CONTRACTOR IS RESPONSIBLE FOR ALL SOD REQUIRED FROM CONSTRUCTION OF PROPOSED IMPROVEMENTS AS STATED IN THE MEASUREMENTS AND PAYMENT FOR PIPE INSTALLATION.
3. REQUIRED INSPECTIONS BY CONTRACTOR DURING CONSTRUCTION:
   a. ONCE EACH WEEK OR WITHIN 24 HRS OF A STORM EVENT (GREATER THAN 1/2 IN.) INSPECT ALL CONTROL MEASURES.
   b. REPAIR ALL DAMAGED AREAS WITHIN 24 HRS OF DISCOVERY.
   c. REMOVE ANY BUILT-UP SEDIMENT AROUND FENCES THAT REACHES 1/3 OF THE SILT FENCE HEIGHT.
   d. SILT FENCES SHOULD BE INSPECTED FOR DEPTH OF SEDIMENT AND TEARS TO INSURE FABRIC HAS NOT PULLED AWAY FROM POSTS.
   e. INSPECT ALL TEMPORARY AND PERMANENT SOIL STABILIZATION FOR WASHOUTS OR BARE SPOTS.
   f. INSPECTION REPORTS MUST BE AVAILABLE FOR INSPECTION AT ALL TIMES. THE SITE SUPERINTENDENT SHALL CONDUCT ALL INSPECTIONS AND MAINTAIN REPORTS.
   g. DATES OF ALL MAJOR GRADING ACTIVITIES MUST BE RECORDED AND MAINTAINED WITH SITE INSPECTIONS WHEN MAJOR GRADING HAS CEASED IN ANY AREA, THE DATE MUST ALSO BE RECORDED.
5. GOOD HOUSEKEEPING THE SITE SHOULD BE KEPT IN AN ODERLY FASHION, THE CONTRACTOR SHALL INSURE THE FOLLOWING ITEMS ARE ADDRESSED:
   a. STORE ONLY WHAT IS NEEDED ON THE SITE.
   b. KEEP ALL STORED MATERIALS IN A NEAT AND ORDERLY FASHION IN THE ORIGINAL CONTAINERS WHEN POSSIBLE.
   c. FOLLOW ALL MANUFACTURER'S RECOMMENDED PROCEDURES FOR DISPOSAL OF WASTE MATERIAL.
   d. INSPECT DAILY TO INSURE WASTE MATERIAL IS DISPOSED OF PROPERLY.

SPILL CONTROL NOTES:

1. IN ADDITION TO THE GOOD HOUSEKEEPING AND MATERIAL MANAGEMENT PRACTICES DISCUSSED IN THE PREVIOUS NOTES OF THIS PLAN, THE FOLLOWING PRACTICES WILL BE FOLLOWED FOR SPILL PREVENTION AND CLEANUP:
   a. MANUFACTURERS' RECOMMENDED METHODS FOR SPILL CLEANUP WILL BE CLEARLY POSTED AND SITE PERSONNEL WILL BE MADE AWARE OF THE PROCEDURES AND THE LOCATION OF THE INFORMATION AND CLEANUP SUPPLIES.
   b. ALL SPILLS WILL BE CLEANED UP IMMEDIATELY AFTER DISCOVERY.
   c. SPILLS OF TOXIC OR HAZARDOUS MATERIAL WILL BE REPORTED TO THE APPROPRIATE STATE OR LOCAL GOVERNMENT AGENCY, REGARDLESS OF SIZE.
   d. THE SPILL PREVENTION PLAN WILL BE ADJUSTED TO INCLUDE MEASURES TO PREVENT THIS TYPE OF SPILL FROM REOCCURRING AND HOW TO CLEAN UP THE SPILL IF THERE IS ANOTHER ONE. A DESCRIPTION OF THE SPILL, WHAT CAUSED IT, AND THE CLEANUP MEASURES WILL ALSO BE INCLUDED.
   e. THE SITE SUPERINTENDENT RESPONSIBLE FOR THE DAY-TO-DAY SITE OPERATIONS WILL BE THE SPILL PREVENTION AND CLEANUP COORDINATOR.

STORM DRAINAGE CONSTRUCTION NOTES:

1. ALL STORM SEWER PIPES SHALL BE REINFORCED CONCRETE PER PROJECT SPECIFICATION SECTION 03612, UNLESS OTHERWISE SHOWN..
2. STORM DRAINAGE PIPES SHALL BE A MINIMUM OF FIFTEEN (15) INCH DIAMETER (15" FOR SHORT LATERAL RUNS ONLY - UP TO 75 FEET; ALL OTHERS, 18" MINIMUM.) OR EQUIVALENT AND BE DESIGNED IN ACCORDANCE WITH THE CITY OF DELTONA LAND DEVELOPMENT CODE.
3. ALL PIPE TERMINUS SHALL BE MITERED END SECTIONS UNLESS A HEADWALL IS APPROVED FOR RESTRICTED LOCATIONS.
4. UNLESS OTHERWISE NOTED, ALL STRUCTURES SHALL MEET FDOT STANDARDS.
5. STORM INLETS, MANHOLES, AND CATCH BASINS SHALL BE EITHER POURED IN PLACE OR PRE-CAST REINFORCED CONCRETE STRUCTURES SHALL BE IN ACCORDANCE WITH PROJECT SPECIFICATION SECTION 03300 AND/OR 03410, AND SHALL BE REQUIRED AT EACH CHANGE OF PIPE SIZE, CHANGE IN PIPE DIRECTION, OR PIPE MATERIAL.
6. STORM INLETS SHALL BE SPACED IN SUCH A MANNER AS TO ACCEPT ONE HUNDRED (100) PERCENT OF THE DESIGN STORM RUNOFF.
7. ALL SWALES, DITCHES MAXIMUM SIDE AND BACK SLOPES MUST NOT BE GREATER THAN 3 TO 1, UNLESS OTHERWISE SPECIFIED ON THE PLAN SHEETS AND SUFFICIENT STABILIZATION IS PROVIDED.
8. NORMAL ROADSIDE SWALES SHALL BE CONSTRUCTED TO A MAXIMUM DEPTH OF 18" BELOW THE OUTSIDE EDGE OF PAVEMENT OR CONCRETE CURB.
9. CONCRETE EROSION CONTROL MUST BE PROVIDED WHERE SWALES OR CULVERTS INTERCEPT DRAINAGE DITCHES.
10. NEW OR RELOCATED, UNDERGROUND WATER MAINS SHALL BE LAID TO PROVIDE A HORIZONTAL DISTANCE OF AT LEAST SIX FEET, AND PREFERABLY TEN FEET, BETWEEN THE OUTSIDE OF THE WATER MAIN AND THE OUTSIDE OF ANY EXISTING OR PROPOSED GRAVITY- OR PRESSURE-TYPE SANITARY SEWER, WASTEWATER FORCE MAIN, OR PIPELINE CONVEYING RECLAIMED WATER NOT REGULATED UNDER PART III OF CHAPTER 62-610, F.A.C. THE MINIMUM HORIZONTAL SEPARATION DISTANCE BETWEEN WATER MAINS AND GRAVITY-TYPE SANITARY SEWERS SHALL BE REDUCED TO THREE FEET WHERE THE BOTTOM OF THE WATER MAIN IS LAID AT LEAST SIX INCHES ABOVE THE TOP OF THE SEWER. NEW OR RELOCATED, UNDERGROUND WATER MAINS CROSSING ANY EXISTING OR PROPOSED GRAVITY- OR VACUUM-TYPE SANITARY SEWER SHALL BE LAID SO THE OUTSIDE OF THE WATER MAIN IS AT LEAST SIX INCHES, AND PREFERABLY 12 INCHES, ABOVE OR AT LEAST 12 INCHES BELOW THE OUTSIDE OF THE OTHER PIPELINE. HOWEVER, IT IS PREFERABLE TO LAY THE WATER MAIN ABOVE THE OTHER PIPELINE. AT THE UTILITY CROSSINGS DESCRIBED ABOVE, ONE FULL LENGTH OF WATER MAIN PIPE SHALL BE CENTERED ABOVE OR BELOW THE OTHER PIPELINE SO THE WATER MAIN JOINTS WILL BE AS FAR AS POSSIBLE FROM THE OTHER PIPELINE. ALTERNATIVELY, AT SUCH CROSSINGS, THE PIPES SHALL BE ARRANGED SO THAT ALL WATER MAIN JOINTS ARE AT LEAST THREE FEET FROM ALL JOINTS IN VACUUM-TYPE SANITARY SEWERS, OR PIPELINES CONVEYING RECLAIMED WATER REGULATED UNDER PART III OF CHAPTER 62-610, F.A.C., AND AT LEAST SIX FEET FROM ALL JOINTS IN GRAVITY- OR PRESSURE-TYPE SANITARY SEWERS, WASTEWATER FORCE MAINS, OR PIPELINES CONVEYING RECLAIMED WATER NOT REGULATED UNDER PART III OF CHAPTER 62-610, F.A.C. UNLESS OTHERWISE SPECIFIED BY JURISDICTIONAL ENTITY (CITY OF DELTONA) THE REQUIREMENTS ABOVE SHALL DICTATE.

TETRA TECH
www.tetratech.com
201 EAST PINE STREET, SUITE 1000
ORLANDO, FL 32801
PHONE: (407) 839-3955 FAX: (407) 839-3790

Michael B. Saxton, P.E.
P.E. No. 71506, FL
201 East Pine Street, Suite 1000
Orlando, Florida 32801
Engineering Business No. 2429

DATE _____

MARK	DATE	DESCRIPTION	BY

CITY OF DELTONA, FL
TIPTON DRIVE
STORMWATER IMPROVEMENTS
GENERAL NOTES

Project No.:	200-08534-12007
Designed By:	MBS
Drawn By:	CIS
Checked By:	RKC

G-001

Copyright: Tetra Tech

Bar Measures 1 inch

1/30/2013 10:43:36 AM- P:\IER\08534\200-08534-12007\CAD\SHEETFILES\G-001 - NOTES.DWG - LOPEZ, HERNAN

NOTES

1. CONTRACTOR TO ENSURE EXISTING WATER SERVICE LINES ARE NOT DISCONNECTED FROM SERVICE.
2. CONTRACTOR TO FIELD VERIFY DEPTH AND LOCATION OF UTILITIES PRIOR TO CONSTRUCTION.
3. MINIMUM FDEP SEPARATION TO BE MAINTAINED AND VERIFIED FOR ALL UTILITY CONFLICTS.

LEGEND

- REMOVE AND REPLACE EXISTING DRIVEWAY TO EXPANSION JOINT, AS SHOWN
- OPEN CUT. REMOVE AND REPLACE PAVEMENT. AREA TO BE RESURFACED AS SHOWN
- PROPOSED RIP-RAP
- PROPOSED SOD RESTORATION
- PROPOSED STORM SEWER PIPE
- MAILBOX TO BE PROTECTED OR REMOVED / REPLACED / RELOCATED AS REQUIRED
- TREE PROTECTION

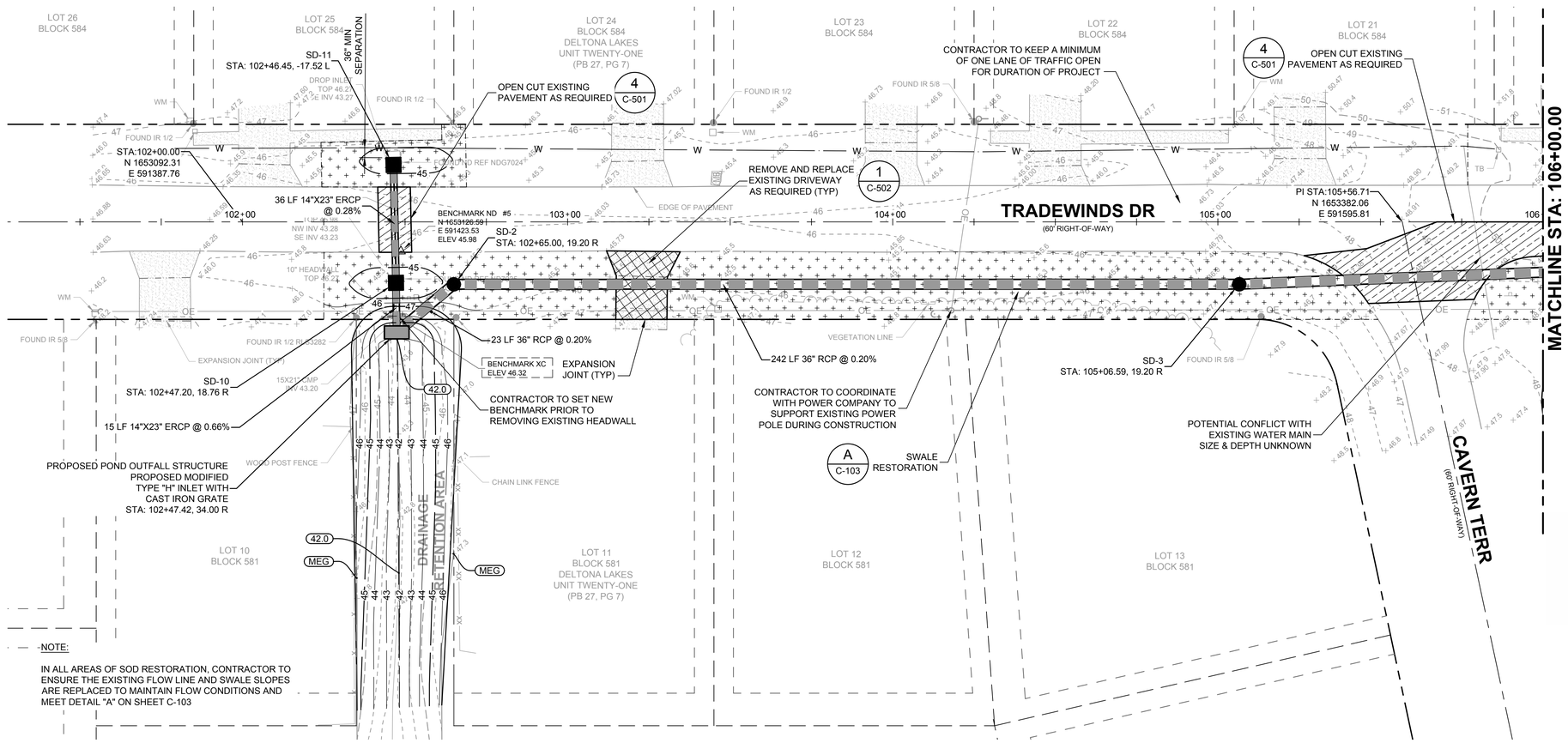

NOTE:

IN ALL AREAS OF SOD RESTORATION, CONTRACTOR TO ENSURE THE EXISTING FLOW LINE AND SWALE SLOPES ARE REPLACED TO MAINTAIN FLOW CONDITIONS AND MEET DETAIL "A" ON SHEET C-103

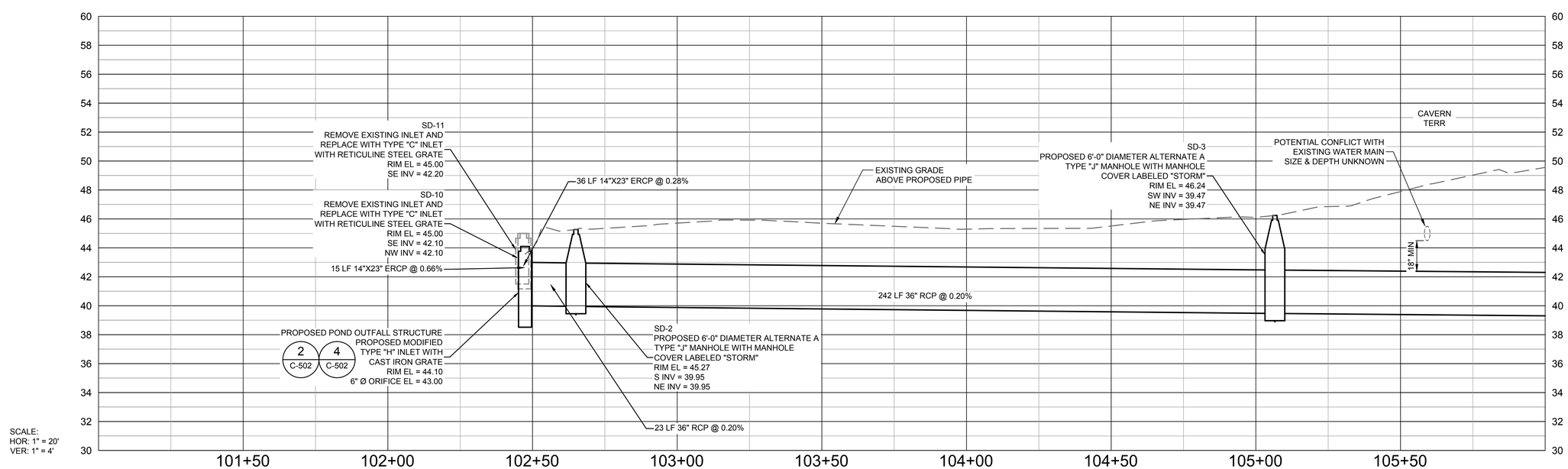

SCALE:
HOR: 1" = 20'
VER: 1" = 4'

TETRA TECH
www.tetratech.com
201 EAST PINE STREET, SUITE 1000
ORLANDO, FL 32801
PHONE: (407) 839-3955 FAX: (407) 839-3790

Michael B. Saxton, P.E.
P.E. No. 71506, FL
201 East Pine Street, Suite 1000
Orlando, Florida 32801
Engineering Business No. 2429

DATE

MARK	DATE	DESCRIPTION	BY

CITY OF DELTONA, FL
TIPTON DRIVE
STORMWATER IMPROVEMENTS
PLAN & PROFILE
STA: 102+00 THRU 106+00
BEGIN PROJECT

Project No.:	200-08534-12007
Designed By:	MBS
Drawn By:	CIS
Checked By:	RKC

C-101

Bar Measures 1 inch

2/5/2013 5:54:03 PM- P:\IER\08534\200-08534-12007\CAD\SHEETFILES\C-101.DWG- LOPEZ, HERNAN

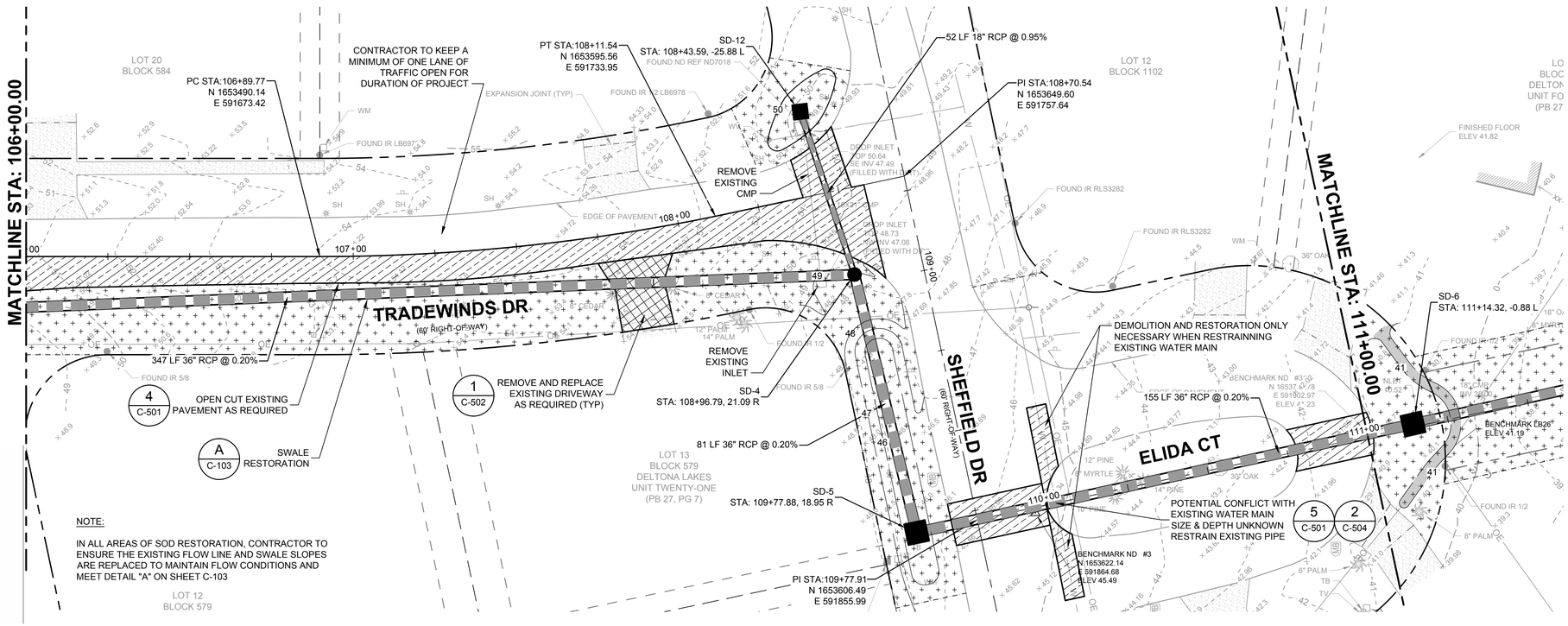

NOTES

1. CONTRACTOR TO ENSURE EXISTING WATER SERVICE LINES ARE NOT DISCONNECTED FROM SERVICE.
2. CONTRACTOR TO FIELD VERIFY DEPTH AND LOCATION OF UTILITIES PRIOR TO CONSTRUCTION.
3. MINIMUM FDEP SEPARATION TO BE MAINTAINED AND VERIFIED FOR ALL UTILITY CONFLICTS.

LEGEND

- REMOVE AND REPLACE EXISTING DRIVEWAY TO EXPANSION JOINT, AS SHOWN
- OPEN CUT, REMOVE AND REPLACE PAVEMENT. AREA TO BE RESURFACED AS SHOWN
- PROPOSED RIP-RAP
- PROPOSED SOD RESTORATION
- PROPOSED STORM SEWER PIPE
- MAILBOX TO BE PROTECTED OR REMOVED / REPLACED / RELOCATED AS REQUIRED
- TREE PROTECTION

SCALE:
HOR: 1" = 20'
VER: 1" = 4'

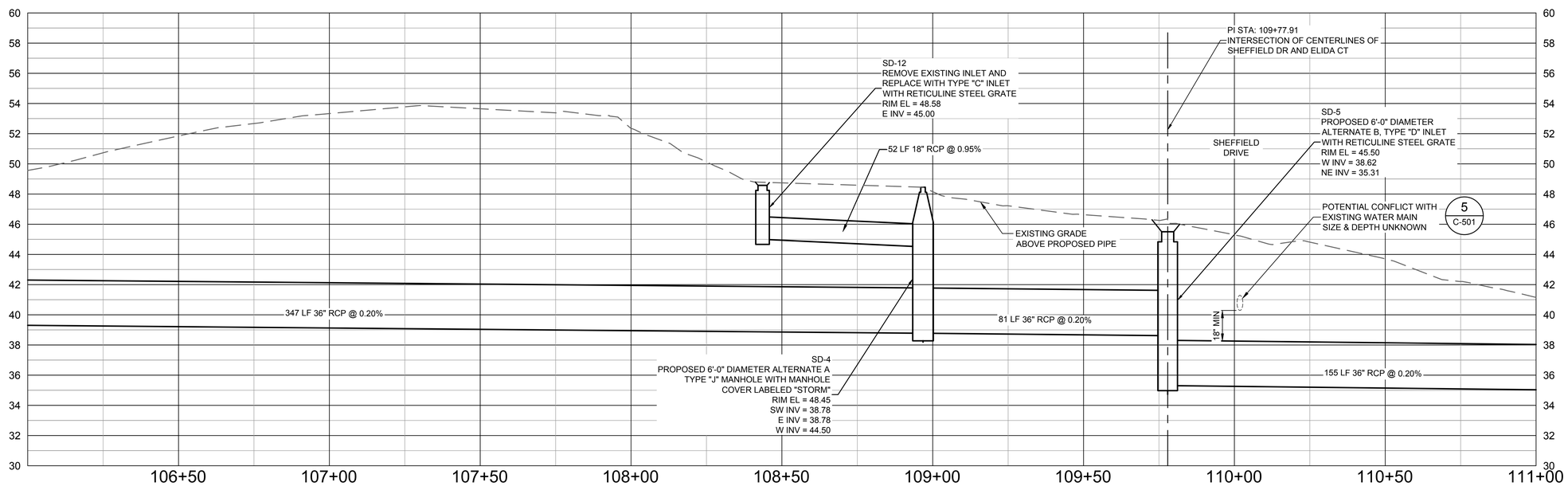

TETRA TECH
www.tetratech.com
201 EAST PINE STREET, SUITE 1000
ORLANDO, FL 32801
PHONE: (407) 839-3955 FAX: (407) 839-3790

Michael B. Saxton, P.E.
P.E. No. 71506, FL
201 East Pine Street, Suite 1000
Orlando, Florida 32801
Engineering Business No. 2429

DATE

MARK	DATE	DESCRIPTION	BY

CITY OF DELTONA, FL
TIPTON DRIVE
STORMWATER IMPROVEMENTS
PLAN & PROFILE
STA: 106+00 THRU 111+00

Project No.:	200-08534-12007
Designed By:	MCS
Drawn By:	CIS
Checked By:	RKC

C-102

Bar Measures 1 inch

2/5/2013 6:06:30 PM- P:\IER\08534\200-08534-12007\CAD\SHEETFILES\C-101.DWG - LOPEZ, HERNAN

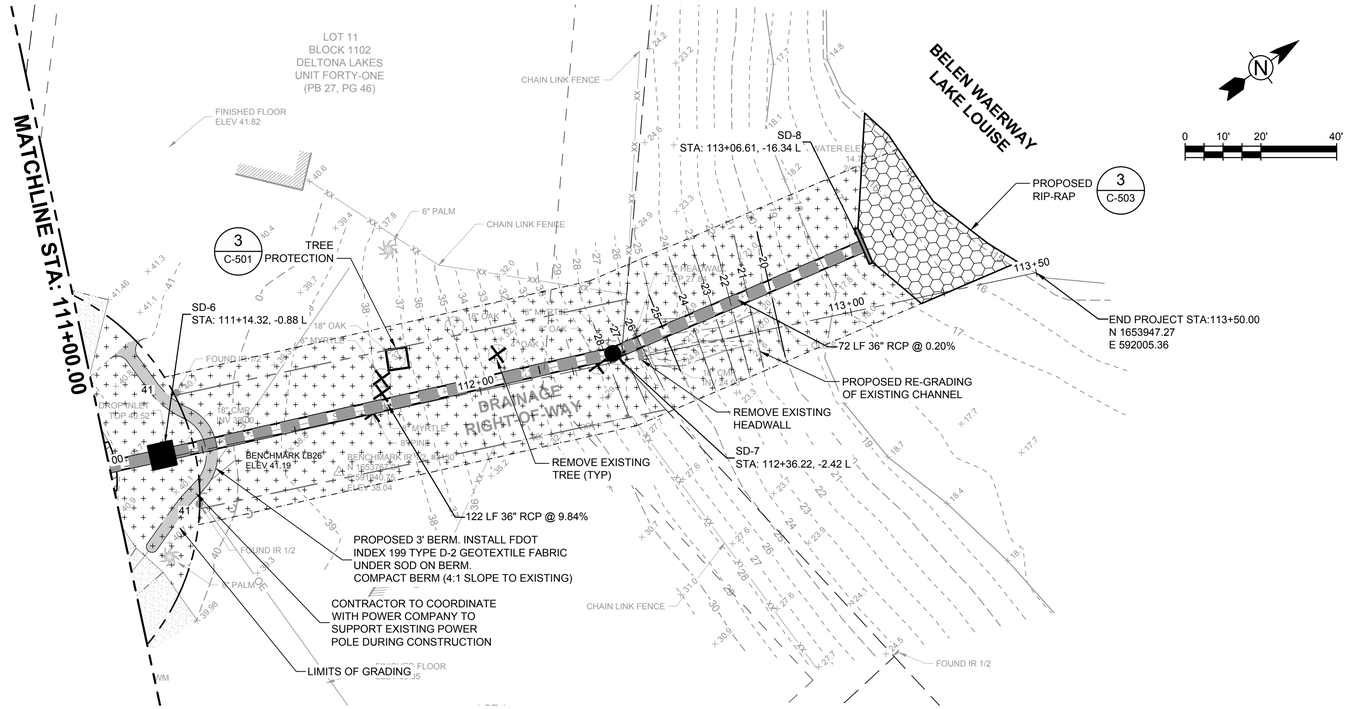

NOTES

1. CONTRACTOR TO ENSURE EXISTING WATER SERVICE LINES ARE NOT DISCONNECTED FROM SERVICE.
2. CONTRACTOR TO FIELD VERIFY DEPTH AND LOCATION OF UTILITIES PRIOR TO CONSTRUCTION.
3. MINIMUM FDEP SEPARATION TO BE MAINTAINED AND VERIFIED FOR ALL UTILITY CONFLICTS.

LEGEND

- REMOVE AND REPLACE EXISTING DRIVEWAY TO EXPANSION JOINT, AS SHOWN
- OPEN CUT. REMOVE AND REPLACE PAVEMENT. AREA TO BE RESURFACED AS SHOWN
- PROPOSED RIP-RAP
- PROPOSED SOD RESTORATION
- PROPOSED STORM SEWER PIPE
- MAILBOX TO BE PROTECTED OR REMOVED / REPLACED / RELOCATED AS REQUIRED
- TREE PROTECTION

SCALE:
HOR: 1" = 20'
VER: 1" = 4'

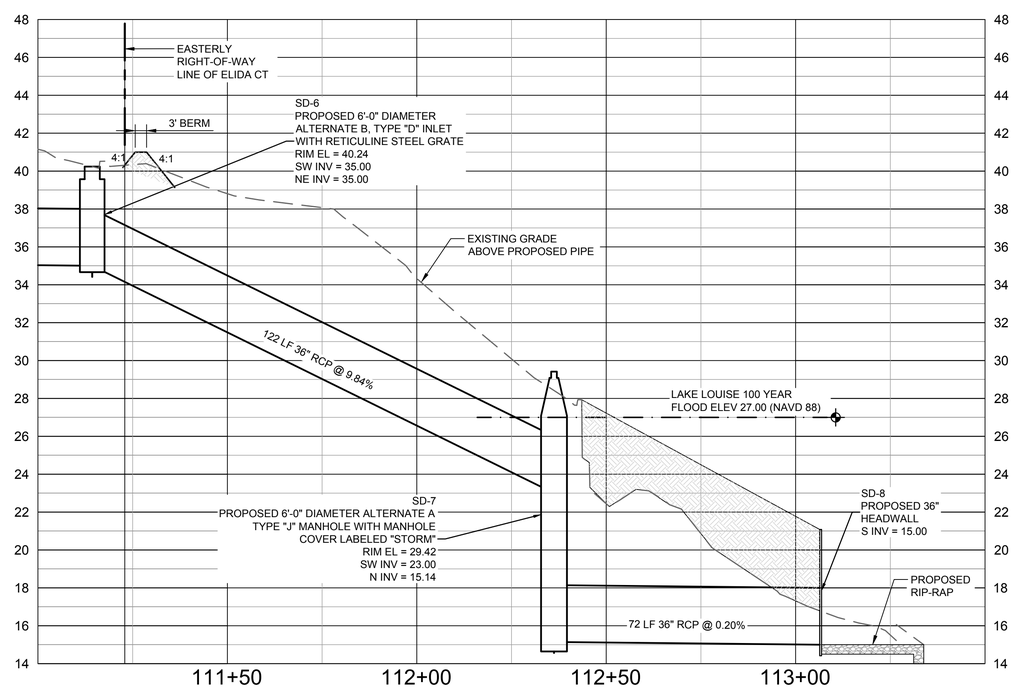

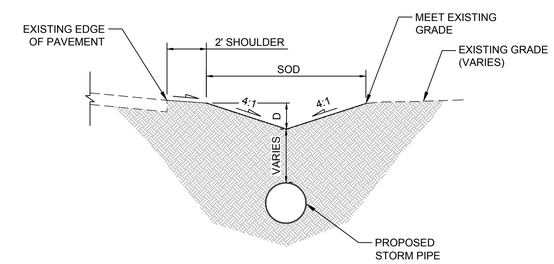

NOTES:

1. TOP OF SOD MUST BE 1" BELOW EDGE OF PAVEMENT.
2. SWALE DEPTH (D) = 6" MINIMUM; 12" TYPICAL.
3. SIDE SLOPES 3:1 MAXIMUM.

TYPICAL SWALE SECTION IN RESTORATION AREAS

A
-

SCALE: N.T.S.

TETRA TECH
www.tetratech.com
201 EAST PINE STREET, SUITE 1000
ORLANDO, FL 32801
PHONE: (407) 839-3955 FAX: (407) 839-3790

Michael B. Saxton, P.E.
P.E. No. 71506, FL
201 East Pine Street, Suite 1000
Orlando, Florida 32801
Engineering Business No. 2429

DATE

MARK	DATE	DESCRIPTION	BY

CITY OF DELTONA, FL
TIPTON DRIVE
STORMWATER IMPROVEMENTS
PLAN & PROFILE
STA: 111+00 THRU 113+50
END PROJECT

Project No.:	200-08534-12007
Designed By:	MBS
Drawn By:	CIS
Checked By:	RKC

C-103

Bar Measures 1 inch

2/5/2013 6:03:13 PM- P:\IER\08534\200-08534-12007\CAD\SHEETFILES\C-101.DWG - LOPEZ, HERNAN

SILT FENCE DETAIL

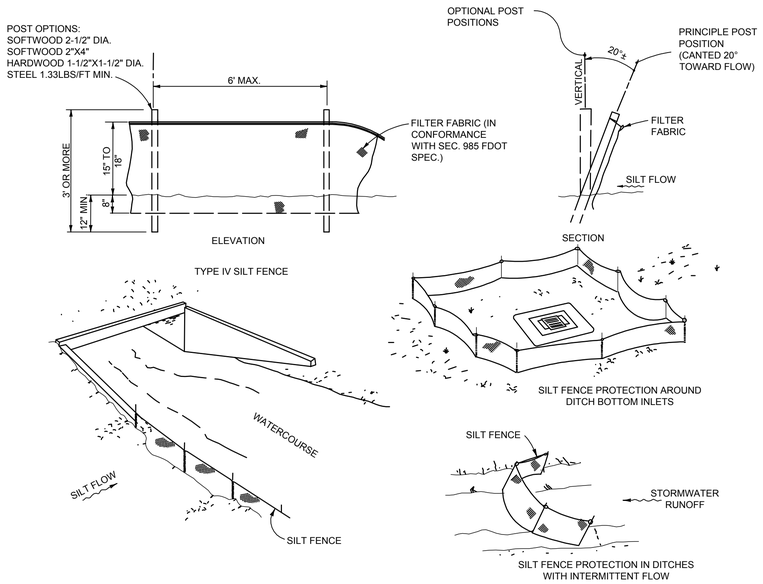

NOTES FOR SILT FENCES

1. TYPE III SILT FENCE TO BE USED AT MOST LOCATIONS. WHERE USED IN DITHCES, THE SPACING FOR TYPE III SILT FENCE SHALL BE IN ACCORDANCE WITH CHART I, SHEET I OF FDOT INDEX 102.
2. TYPE IV SILT FENCE TO BE USED WHERE LARGE SEDIMENT LOADS ARE ANTICIPATED. SUGGESTED USE IS WHERE FILL SLOPE IS 1:2 OR STEEPER AND LENGHT OF SLOPE EXCEEDS 25 FEET. AVOID WHERE THE DETAINED WATER MAY BACK INTO TRAVEL LANES OR OFF THE RIGHT OF WAY.
3. DO NOT CONSTRUCT SILT FENCES ACROSS PERMANENT FLOWING WATERCOURSES. SILT FENCES ARE TO BE UPLAND LOCATIONS AND TURBIDITY BARRIERS USED AT PERMANENT BODIES OF WATER.
4. WHERE USED AS SLOPE PROTECTION, SILT FENCE IS TO BE CONSTRUCTED ON 0% LONGITUDINAL GRADE TO AVOID CHANNELIZING RUNOFF ALONG THE LENGTH OF THE FENCE.

1 DETAIL
N.T.S PER FDOT INDEX NO. 102

BEDDING AND TRENCHING DETAIL

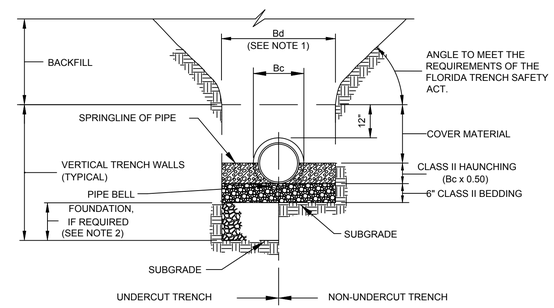

TYPICAL DETAIL-OPEN CUT
TRENCHING, PIPE BEDDING, BACKFILLING & COMPACTING

NOTES:

1. DIMENSION Bc = PIPE O.D.
   DIMENSION Bd = TRENCH WIDTH AT TOP OF PIPE
   MAXIMUM Bd = Bc + 30"
   MINIMUM Bd = MAXIMUM DIMENSION OF BELL + 8" (UNSHEETED TRENCH)
   = MINIMUM DIMENSION OF BELL + 12" (SHEETED TRENCH)
2. REMOVE UNSUITABLE OR UNSTABLE MATERIAL, AS DETERMINED BY DELTONA WATER SERVICES, ENCOUNTERED BELOW THE TRENCH BOTTOM, AS REQUIRED TO PRODUCE A SUITABLE FOUNDATION. FURNISH, PLACE AND COMPACT FOUNDATION AS SPECIFIED.
3. FURNISH, PLACE AND COMPACT BEDDING, HAUNCHING, COVER MATERIAL AND BACKFILL AS SPECIFIED.
4. PIPE BEDDING, FDOT #67 COARSE AGGREGATE TO PIPE C.L. THEN SELECT COMMON FILL AS PER SPECIFICATIONS SECTION 02221.
5. TRENCH BACKFILL (NON-ROADWAY): COMMON FILL COMPACTED PER SPECIFICATION SECTION 02221.
6. USE OF CLASS II BEDDING TO BE DETERMINED IN FIELD BY DELTONA WATER SERVICES.
7. REFER TO SPECIFICATIONS, SECTION 02315, FOR DESCRIPTION OF BEDDING AND COMMON FILL MATERIAL.

PIPE BEDDING & TRENCHING DETAIL

2 DETAIL
SCALE: NTS

TREE PROTECTION BARRICADES DETAIL

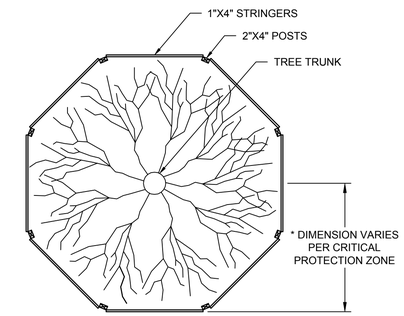

NOTE:
FOR GROUPS OF TREES, PLACE BARRICADES BETWEEN TREES AND CONSTRUCTION ACTIVITY.

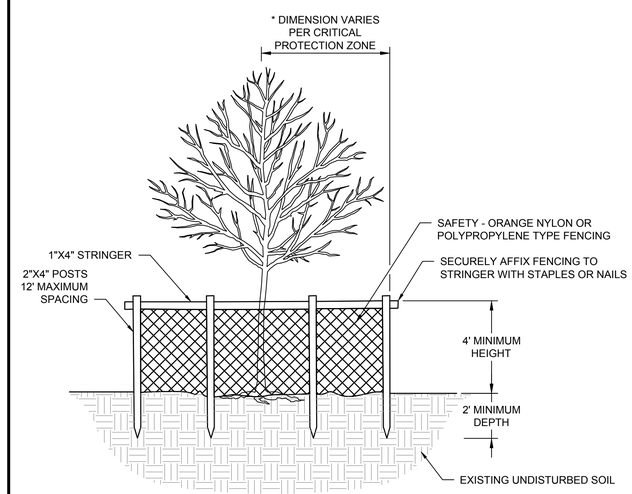

NOTE:
CRITICAL PROTECTION ZONE: THE AREA SURROUNDING A TREE WITHIN 'A' CIRCLE DESCRIBED BY 'A' RADIUS OF ONE FOOT FOR EACH INCH OF THE TREE TRUNK DIAMETER AT 54" ABOVE FINISHED GRADE. FOR GROUPS OF TREES, PLACE BARRICADES BETWEEN TREES AND CONSTRUCTION ACTIVITY.

* TREE PROTECTION BARRICADES SHALL BE LOCATED TO PROTECT A MINIMUM OF 75% OF THE CRITICAL PROTECTION ZONE.

3 DETAIL
SCALE: N.T.S. PER FDOT INDEX NO. 544

ROADWAY OPEN CUT AND REPAIR DETAIL

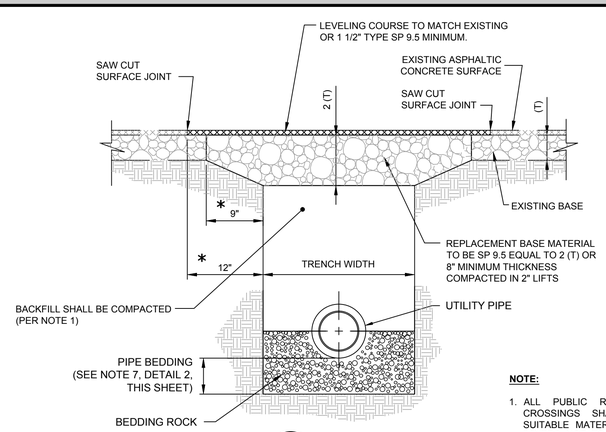

4 DETAIL
SCALE: NTS

NOTE:

1. ALL PUBLIC ROADS AND PAVED DRIVE CROSSINGS SHALL BE BACKFILLED WITH SUITABLE MATERIAL AND TAMP MATERIAL IN LAYERS NOT TO EXCEED 6" IN ACCORDANCE WITH D.O.T. STANDARD SPECIFICATIONS. COMPACTION SHALL MEET PROJECT SPECIFICATION 02221 REQUIREMENTS.

DEFLECTION TYPE UTILITY CROSSING

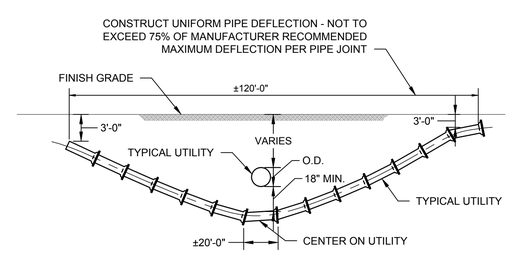

5 DETAIL
SCALE: NTS

TETRA TECH
www.tetratech.com
201 EAST PINE STREET, SUITE 1000
ORLANDO, FL 32801
PHONE: (407) 839-3955 FAX: (407) 839-3790

Michael B. Saxton, P.E.
P.E. No. 71506, FL
201 East Pine Street, Suite 1000
Orlando, Florida 32801
Engineering Business No. 2429

DATE

MARK	DATE	DESCRIPTION	BY

CITY OF DELTONA, FL
TIPTON DRIVE
STORMWATER IMPROVEMENTS
DETAILS

Project No.:	200-08534-12007
Designed By:	MBS
Drawn By:	CIS
Checked By:	RKC

C-501

Copyright: Tetra Tech

Bar Measures 1 inch

1/30/2013 10:10:43 AM- P:\IER\08534\200-08534-12007\CAD\SHEETFILES\C-504 DETAILS.DWG - LOPEZ, HERNAN

DRIVEWAY REPAIR DETAIL

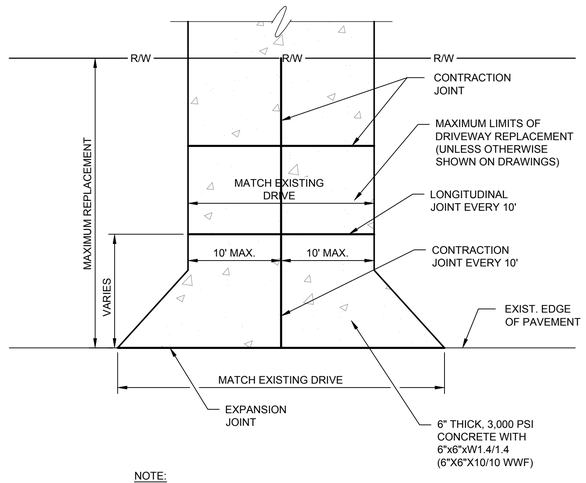

NOTE:

REMOVE AND REPLACE EXISTING DRIVEWAY LIMITS SHOWN ARE APPROXIMATE. CONTRACTOR TO REMOVE DRIVEWAY FROM EOP TO FIRST CONTROL OR EXPANSION JOINT (FIELD VERIFY LOCATION), OR TO AN EXISTING SIDEWALK (WHICHEVER REQUIRES LESS CONCRETE)

3 **DETAIL**
SCALE: NTS

TYPE "H" INLET DETAIL

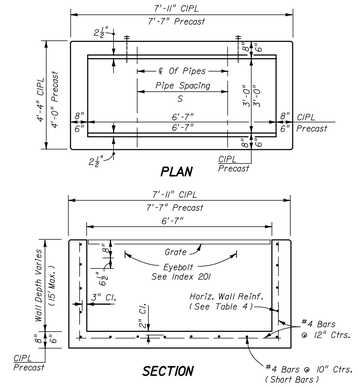

HORIZONTAL WALL REINFORCING SCHEDULES (TABLE 4)

WALL DEPTH	SCHEDULE	AREA (in^2/ft)	MAX. SPACING	
			BARS	WWF
0'-5'	B5.5	0.24	$5\frac{1}{2}$"	5"
5'-7'	C6.5	0.37	$6\frac{5}{8}$"	6"
7'-15'	D4.5	0.53	$4\frac{1}{2}$"	4"

TYPE H (2 & 3-GRATE INLET)

Recommended Maximum Pipe Size:
3'-0" Wall - 24" Pipe
6'-7" Wall - 1-60" Pipe
Or 2-24" Pipe (S=3'-5")

2 **DETAIL**
SCALE: NTS FDOT INDEX NO. 232

TYPE "D" INLET DETAIL

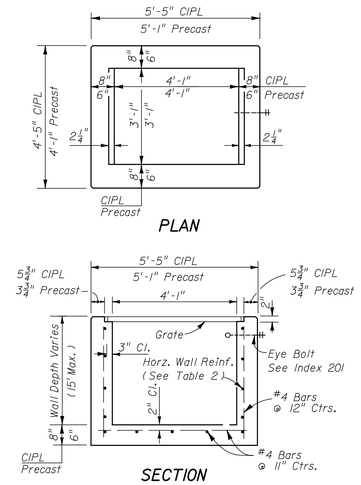

HORIZONTAL WALL REINFORCING SCHEDULES (TABLE 2)

WALL DEPTH	SCHEDULE	AREA (in^2/ft)	MAX. SPACING	
			BARS	WWF
0'-6'	A12	0.20	12"	8"
6'-10'	A6	0.20	6"	5"
10'-13'	A4	0.20	4"	3"
10'-15'	B5.5	0.24	$5\frac{1}{2}$"	5"

TYPE D

Recommended Maximum Pipe Size:
3'-1" Wall - 24" Pipe
4'-1" Wall - 36" Pipe

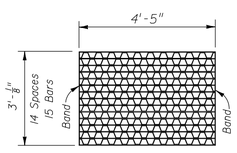

TYPE D
Straight Bars 2"x$\frac{1}{4}$"
Reticuline Bars $1\frac{1}{4}$" x $\frac{3}{16}$"
Bands 2"x$\frac{1}{4}$"
Approx. Weight 190 Lbs.

STEEL GRATE

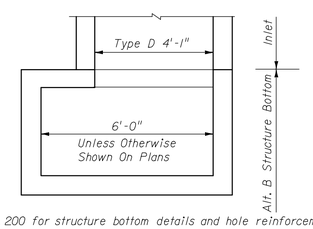

See Index No. 200 for structure bottom details and hole reinforcement.

ALT. B STRUCTURE BOTTOM FOR INLETS TYPE C, D & E

3 **DETAIL**
SCALE: N.T.S. FDOT INDEX NO. 232

TYPE "C" INLET DETAIL

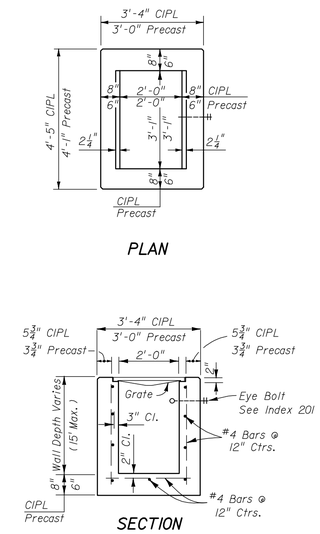

HORIZONTAL WALL REINFORCING SCHEDULES (TABLE 1)

WALL DEPTH	SCHEDULE	AREA (in^2/ft)	MAX. SPACING	
			BARS	WWF
0'-15'	A12	0.20	12"	8"

TYPE C

Recommended Maximum Pipe Size:
2'-0" Wall - 18" Pipe
3'-1" Wall - 24" Pipe (18" where an 18" pipe enters a 2'-0" wall)

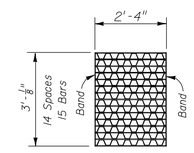

TYPE C
Straight Bars 2"x$\frac{1}{4}$"
Reticuline Bars $1\frac{1}{4}$" x $\frac{3}{16}$"
Bands 2"x$\frac{1}{4}$"
Approx. Weight 104 Lbs.

STEEL GRATE

5 **DETAIL**
SCALE: N.T.S. FDOT INDEX NO. 232

POND OUTFALL STRUCTURE - MODIFIED TYPE "H" INLET DETAIL

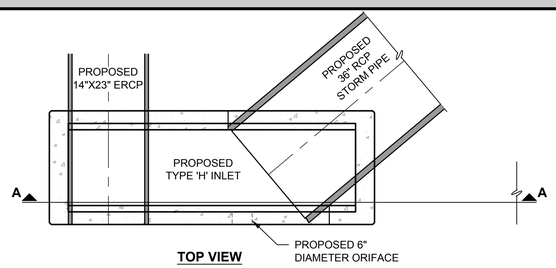

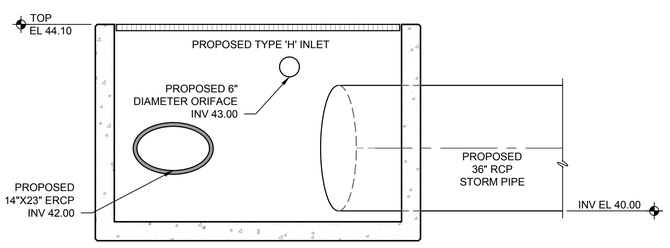

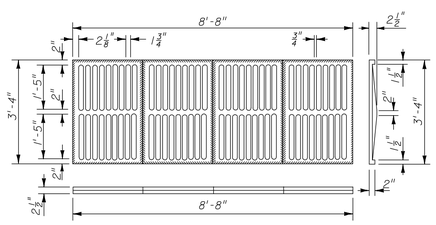

TYPE H (4-GRATE INLET)
Approx. Weight 967 Lbs.

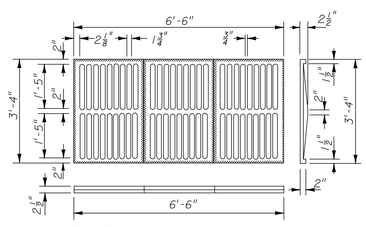

TYPE H (3-GRATE INLET)
Approx. Weight 725 Lbs.

CAST IRON GRATES

4 **DETAIL**
SCALE: NTS FDOT INDEX NO. 232

TETRA TECH
www.tetratech.com
201 EAST PINE STREET, SUITE 1000
ORLANDO, FL 32801
PHONE: (407) 839-3955 FAX: (407) 839-3790

Michael B. Saxton, P.E.
P.E. No. 71506, FL
201 East Pine Street, Suite 1000
Orlando, Florida 32801
Engineering Business No. 2429

DATE

MARK	DATE	DESCRIPTION	BY

CITY OF DELTONA, FL
TIPTON DRIVE
STORMWATER IMPROVEMENTS
DETAILS

Project No.:	200-08534-12007
Designed By:	MBS
Drawn By:	CIS
Checked By:	RKC

C-502

Copyright: Tetra Tech

Bar Measures 1 inch

1/18/2013 12:05:37 PM: P:\IER\08534\200-08534-12007\CAD\SHEETFILES\C-504 DETAILS.DWG - LOPEZ, HERNAN

HEADWALL (END WALL)

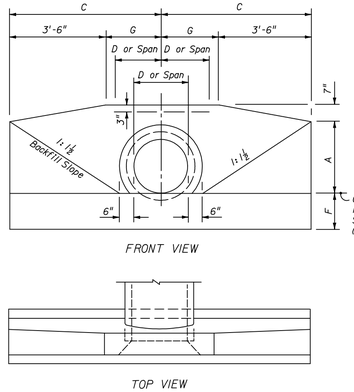

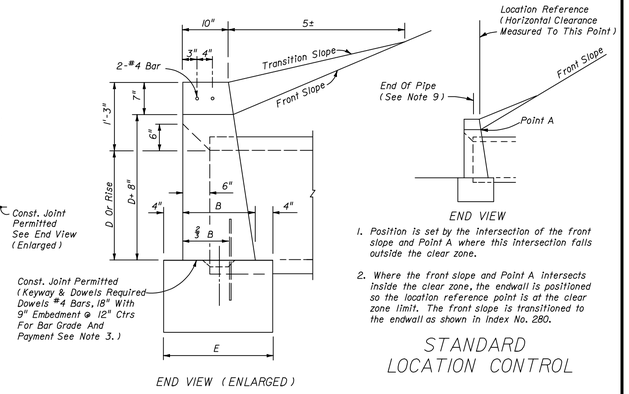

1. Position is set by the intersection of the front slope and Point A where this intersection falls outside the clear zone.
2. Where the front slope and Point A intersects inside the clear zone, the endwall is positioned so the location reference point is at the clear zone limit. The front slope is transitioned to the endwall as shown in Index No. 280.

STANDARD LOCATION CONTROL

ENDWALL DIMENSIONS (EXCLUSIVE OF MULTIPLE PIPE SPACING)

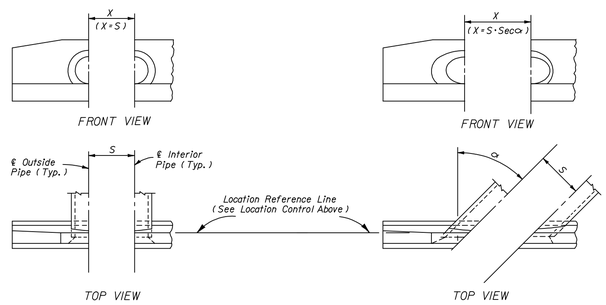

NORMAL PIPE — SKEWED PIPE

LEGEND

- α Pipe Skew
- S Center To Center Pipe Spacing
- X Centerline To Centerline Dimension At Face Of Headwall

ENDWALL POSITIONS FOR SINGLE AND MULTIPLE PIPE AND SPACING FOR MULTIPLE PIPE

GENERAL NOTES

1. Endwall dimensions, locations and positions are for round and elliptical concrete pipe and for round and pipe-arch corrugated metal pipe. Round concrete pipe shown.
2. Front slope and ditch transitions shall be in accordance with Index No. 280.
3. Endwalls may be cast in place or precast concrete. Reinforcing steel shall be Grades 40 or 60. Additional reinforcement necessary for handling precast units shall be determined by the Contractor or the supplier. Cost of reinforcement shall be included in the contract unit price for concrete, (endwalls).
4. All exposed corners and edges of concrete are to be chamfered $\frac{3}{4}$".
5. Concrete meeting the requirements of ASTM C478 (4000 psi) may be used in lieu of Class I concrete in precast items manufactured in plants which are under the Standard Operating Procedures for the inspection of precast drainage products.
6. On outfall ditches with side slopes flatter than 1:1½ provide 20' transitions from the endwall to the flatter side slopes, right of way permitting.
7. For sodding around endwalls see Index No. 281.
8. Payment for concrete quantities for endwalls skewed to the pipe shall be made on the following basis:

Endwall Skew To Pipe	Use Tabulated Value
0° to 5°	0°
6° to 15°	15°
16° to 30°	30°
31° or over	45°

9. Pipe length plan quantities shall be based on the pipe end locations shown in the standard location control end view, or lengths based on special endwall locations called for in the plans.
10. Payment for pipe in pipe culverts shall be based on plan quantities, adjusted for endwall locations subsequently established by the Engineer.
11. Endwalls to be paid for under the contract unit price for Class I Concrete (Endwalls), CY.

1 DETAIL
SCALE: N.T.S. FDOT INDEX NO. 250

TURBIDITY BARRIER DETAIL

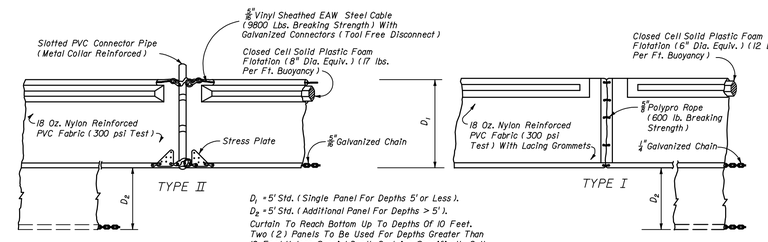

D_1 = 5' Std. (Single Panel For Depths 5' or Less).
D_2 = 5' Std. (Additional Panel For Depths > 5').
Curtain To Reach Bottom Up To Depths Of 10 Feet. Two (2) Panels To Be Used For Depths Greater Than 10 Feet Unless Special Depth Curtains Specifically Call For In The Plans Or As Determined By The Engineer.

NOTICE: COMPONENTS OF TYPES I AND II MAY BE SIMILAR OR IDENTICAL TO PROPRIETARY DESIGNS. ANY INFRINGEMENT ON THE PROPRIETARY RIGHTS OF THE DESIGNER SHALL BE THE SOLE RESPONSIBILITY OF THE USER. SUBSTITUTIONS FOR TYPES I AND II SHALL BE AS APPROVED BY THE ENGINEER.

FLOATING TURBIDITY BARRIERS

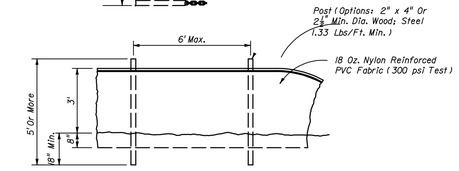

STAKED TURBIDITY BARRIER

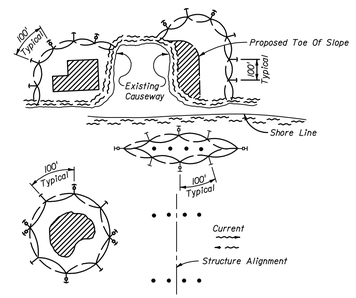

NOTES:
1. Turbidity barriers are to be used in all permanent bodies of water regardless of water depth.
2. Number and spacing of anchors dependent on current velocities.
3. Deployment of barrier around pile locations may vary to accommodate construction operations.
4. Navigation may require segmenting barrier during construction operations.
5. For additional information see Section 104 of the Standard Specifications.

TURBIDITY BARRIER APPLICATIONS

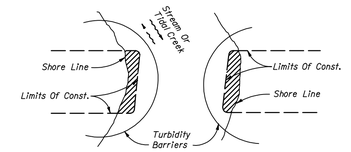

Note: Turbidity barriers for flowing streams and tidal creeks may be either floating, or staked types or any combinations of types that will suit site conditions and meet erosion control and water quality requirements. The barrier type(s) will be at the Contractors option unless otherwise specified in the plans, however payment will be under the pay item(s) established in the plans for Floating Turbidity Barrier and/or Staked Turbidity Barrier. Posts in staked turbidity barriers to be installed in vertical position unless otherwise directed by the Engineer.

LEGEND

- Pile Locations
- Dredge Or Fill Area
- Mooring Buoy w/Anchor
- Anchor
- Barrier Movement Due To Current Action

GENERAL NOTES

1. Floating turbidity barriers are to be paid for under the contract unit price for Floating Turbidity Barrier, LF.
2. Staked turbidity barriers are to be paid for under the contract unit price for Staked Turbidity Barrier, LF.

2 DETAIL
SCALE: N.T.S. PER FDOT INDEX # 103

RIP-RAP DETAIL

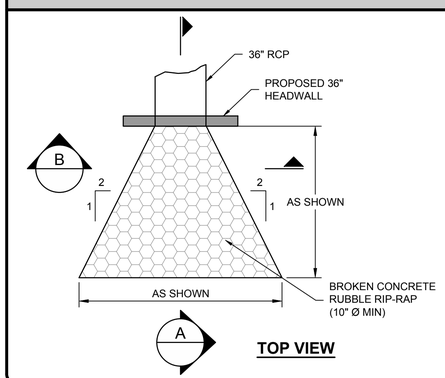

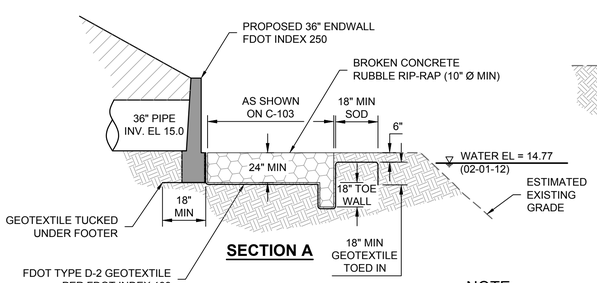

3 DETAIL
SCALE: NTS

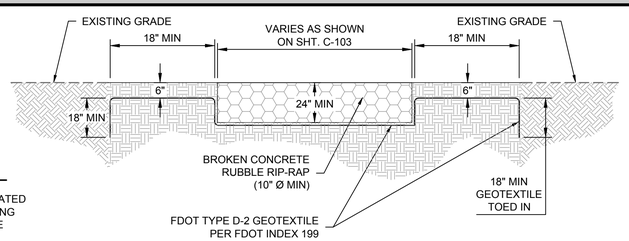

NOTE:

1. CONCRETE RUBBLE SHALL BE FREE OF REBAR, WIRE, AND OTHER MATERIAL THAT MAY PUNCTURE THE FILTER FABRIC MATERIAL. ANY PUNCTURED GEOTEXTILE SHALL BE REPLACED IMMEDIATELY AT THE CONTRACTOR'S EXPENSE.

TETRA TECH
www.tetratech.com
201 EAST PINE STREET, SUITE 1000
ORLANDO, FL 32801
PHONE: (407) 839-3955 FAX: (407) 839-3790

Michael B. Saxton, P.E.
P.E. No. 71506, FL
201 East Pine Street, Suite 1000
Orlando, Florida 32801
Engineering Business No. 2429

DATE

MARK	DATE	DESCRIPTION	BY

CITY OF DELTONA, FL
TIPTON DRIVE
STORMWATER IMPROVEMENTS
DETAILS

Project No.:	200-08534-12007
Designed By:	MBS
Drawn By:	CIS
Checked By:	RKC

C-503

Copyright: Tetra Tech

Bar Measures 1 inch

2/6/2013 9:54:55 AM- P:\IER\08534\200-08534-12007\CAD\SHEETFILES\C-504 DETAILS.DWG - LOPEZ, HERNAN

U STORM MANHOLE - ALTERNATE A, TYPE "J"

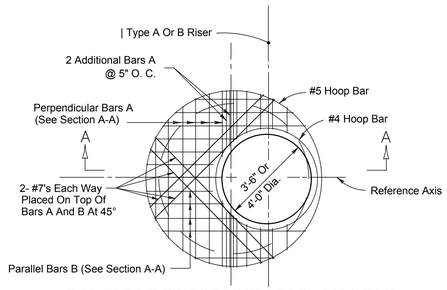

TOP SLAB REINFORCING STEEL DIAGRAM

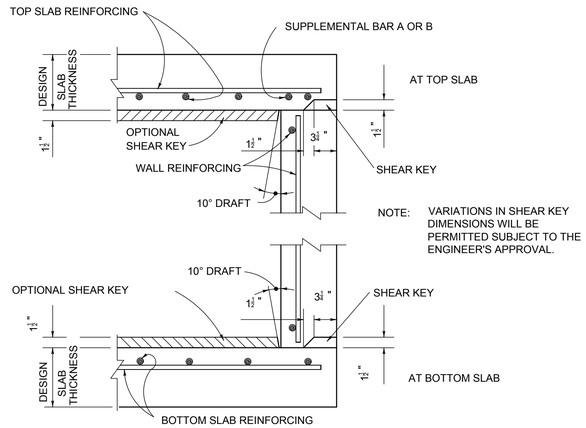

NOTE: VARIATIONS IN SHEAR KEY DIMENSIONS WILL BE PERMITTED SUBJECT TO THE ENGINEER'S APPROVAL.

SLAB TO WALL DETAILS FOR PRECAST ALTERNATE WITH 8" WALLS

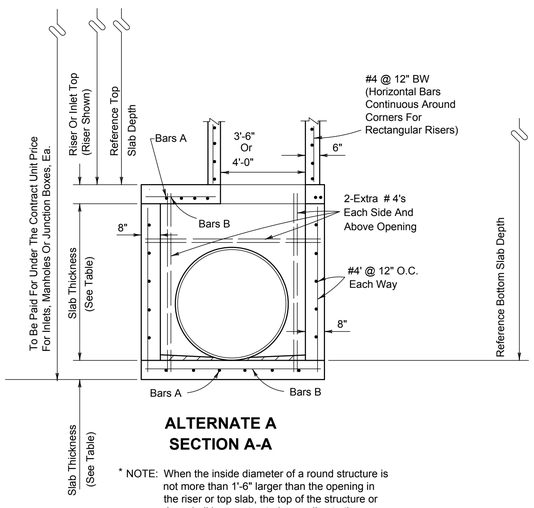

ALTERNATE A SECTION A-A

* NOTE: When the inside diameter of a round structure is not more than 1'-6" larger than the opening in the riser or top slab, the top of the structure or riser shall be constructed according to the "Special Top Slab" details on this sheet.

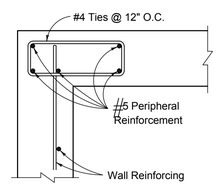

SECTION C-C

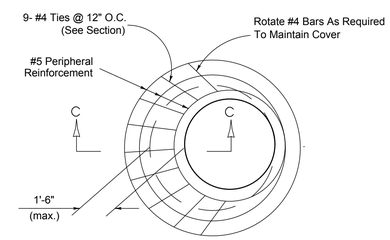

SPECIAL TOP SLAB*

NOTE: ALL MANHOLES TO BE 6'-0" DIAMETER ALTERNATE A, TYPE "J" MANHOLES

GENERAL NOTES

1. STANDARD STRUCTURE BOTTOMS 4'-0" DIAMETER AND SMALLER (ALT. A) AND 3'-6" SQUARE (ALT. B) ARE DESIGNATED TYPE P. LARGER STANDARD STRUCTURE BOTTOMS ARE DESIGNATED TYPE J. RISERS ARE PERMITTED FOR ALL STRUCTURES. DELTONA LDC REQUIRES 5'-0" DIA. FOR 36" PIPE.
2. WALLS OF CIRCULAR STRUCTURES (ALTERNATE A) CONSTRUCTED IN PLACE MAY BE OF NON-REINFORCED CONCRETE OR BRICK OR REINFORCED CONCRETE. PRECAST AND RECTANGULAR STRUCTURES (ALTERNATE B) SHALL BE CONSTRUCTED OF REINFORCED CONCRETE ONLY.
3. WALL THICKNESS AND REINFORCEMENT ARE FOR EITHER REINFORCED CAST-IN-PLACE OR PRECAST CONCRETE UNITS EXCEPT THAT PRECAST CIRCULAR UNITS MAY BE FURNISHED WITH WALLS IN ACCORDANCE WITH EITHER A.S.T.M. C-478 (UP TO 96" DIAMETER) OR A.S.T.M. C-76, CLASS III, B WALL, MODIFIED WHERE THE ELLIPTICAL STEEL CAGE AREA IS PLACED IN THE CENTER ONE-THIRD OF THE WALL.
4. TOP AND FLOOR SLAB THICKNESS AND REINFORCEMENT ARE FOR PRECAST AND CAST IN PLACE CONSTRUCTION. TOP AND FLOOR SLABS SHALL BE OF CLASS II CONCRETE. CONCRETE AS SPECIFIED IN A.S.T.M. C-478 (4000 PSI) MAY BE USED IN LIEU OF CLASS I AND CLASS II CONCRETE IN PRECAST ITEMS MANUFACTURED IN PLANTS WHICH ARE UNDER THE "STANDARD OPERATING PROCEDURES" FOR THE INSPECTION OF PRECAST DRAINAGE PRODUCTS.
5. ALL REINFORCEMENT SHALL BE A.S.T.M. A615, GRADE 60 OR 65 KSI WELDED WIRE FABRIC, EITHER SMOOTH OR DEFORMED.
6. STRUCTURE BOTTOMS MAY BE USED IN CONJUNCTION WITH CURB INLET TOPS TYPES 1, 2, 3, 4, 5, 6, 9, AND 10, AND ANY MANHOLE OR JUNCTION BOX UNLESS OTHERWISE SHOWN IN THE PLANS OR OTHER STANDARD DRAWINGS. ALT. B STRUCTURE BOTTOMS MAY BE USED IN CONJUNCTION WITH CURB INLET TYPES 7 & 8, OR ANY DITCH BOTTOM INLET UNLESS OTHERWISE SHOWN IN THE PLANS OR OTHER STANDARD DRAWINGS.
7. RECTANGULAR STRUCTURES MAY BE ROTATED AS DIRECTED BY THE ENGINEER IN ORDER TO FACILITATE CONNECTIONS BETWEEN THE STRUCTURE WALLS AND STORM SEWER PIPES.
8. EXCEPT WHEN ACI HOOKS ARE SPECIFICALLY REQUIRED, REINFORCEMENT TOP AND SLAB SHALL BE STRAIGHT EMBODIMENT.
9. ALL STEEL BARS SHALL HAVE 1 1/2" MINIMUM COVER UNLESS OTHERWISE SHOWN EXCEPT FOR PRECAST CIRCULAR UNITS MANUFACTURED UNDER ASTM C-76 OR ASTM C-478, HORIZONTAL STEEL IN RECTANGULAR STRUCTURES SHALL BE LAPPED A MINIMUM OF 24 BAR DIAMETERS AT CORNERS.
10. THE CORNER FILLETS SHOWN ARE NECESSARY FOR RECTANGULAR STRUCTURES USED WITH CIRCULAR RISERS AND INLET THROATS AND USED ON SKEW WITH RECTANGULAR RISERS, INLET AND INLET THROATS. FILLETS WILL BE REQUIRED IN LIEU OF THE BOTTOM SLAB OF THE ALT. B RISER WHEN USED WITH THE ALT. A BOX. EACH FILLET SHALL BE REINFORCED WITH 2-#5 BARS.
11. INLET THROATS, RISER OR MANHOLE TOPS SHALL BE SECURED TO STRUCTURES AS SHOWN ON INDEX NO. 201.
12. STRUCTURES WITH DEPTHS OVER 14' ARE TO BE CHECKED FOR FLOATATION BY DESIGNER OF PROJECT DRAINAGE.
13. UNITS LARGER THAN SPECIFIED STANDARD MAY BE SUBSTITUTED AT THE CONTRACTOR'S OPTION WHEN THESE UNITS WILL NOT CAUSE OR INCREASE THE SEVERITY OF UTILITY CONFLICTS. SUCH LARGER UNITS SHALL BE FURNISHED AT NO ADDITIONAL COST TO THE DEPARTMENT. LARGER ALTERNATE A UNITS CANNOT REPLACE ALTERNATE B UNITS WITHOUT APPROVAL OF THE ENGINEER. THIS NOTE APPLIES TO THIS INDEX ONLY.
14. FOR MANHOLE AND JUNCTION BOX TOPS, FOR FRAMES AND COVERS, AND, FOR SUPPLEMENTARY DETAILS SEE INDEX NO. 201.

1 **DETAIL**
SCALE: NTS

RESTRAINED JOINT SCHEDULE DETAIL

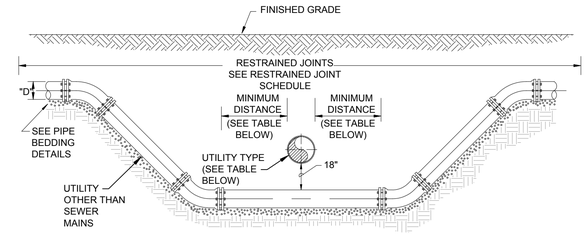

UTILITY TYPE	MINIMUM HORIZONTAL DISTANCE
SANITARY SEWER OR FORCE MAIN	10'-0" MIN.
OTHER THAN SEWER	1'-6" MIN.

NOTE: 18" MIN SEPARATION FOR STORM DRAIN CROSSINGS

RESTRAINED JOINT UTILITY CROSSING FOR UTILITIES OTHER THAN SEWER MAINS

PIPE DIA (Inches)	RESTRAINED LENGTH EA. SIDE OF RESTRAINED FITTING (FT)								RESTRAINED LENGTH FOR REDUCERS											
	DIP				PVC																	
	90°	45°	22-1/2°	11-1/4°	90°	45°	22-1/2°	11-1/4°	3	4	6	8	10	12	16	20	24	30	36		
4	35	15	10	5	55	25	15	10	40	-	-	-		-	-	-	-	-	-	PVC	
6	55	25	10	5	80	35	20	10	50	45	-	-		-	-	-	-	-	-	PVC	
8	65	30	15	10	90	40	20	10	75	70	40	-	-	-	-	-	-	-	-	PVC	
10	80	35	20	10	110	50	25	15	95	90	70	40	-	-	-	-	-	-	-	PVC	
12	95	40	20	10	130	55	30	15	120	115	100	75	40	-	-	-	-	-	-	PVC	
16	120	50	25	15	165	70	35	20	160	155	140	125	100	70	-	-	-	-	-	PVC	
20	150	65	30	15	200	85	40	20	200	195	185	170	150	130	75	-	-	-	-	PVC	
24	160	70	35	20	210	90	45	25	160	155	150	140	135	120	90	50	-	-	-	DIP	
30	190	80	40	20	250	105	50	25	195	190	185	180	170	160	120	105	70	-	-	DIP	
36	220	95	45	25	-	-	-	-	225	220	215	210	205	195	180	150	125	70	-	DIP	
42	245	105	50	25	-	-	-	-	245	240	235	230	225	220	205	180	155	105	50	DIP	
48	260	120	60	30	-	-	-	-	255	250	245	240	235	230	215	195	175	125	70	DIP	

RESTRAINED LENGTHS FOR DEAD ENDS, BRANCHES AND HDPE TO PVC TRANSITIONS SHALL BE THE SAME AS FOR 90° BENDS. IN-LINE VALVES SHALL BE RESTRAINED 20' EACH SIDE OF THE VALVE. (IF A JOINT FALLS AT THE MAXIMUM DISTANCE, IT SHALL BE RESTRAINED). TABLE BASED ON IRON FITTINGS. TEST PRESSURE 150 PSI.

LENGTH OF RESTRAINED JOINT FOR LARGER DIAMETER PIPE

2 **DETAIL**
SCALE: NTS

CONCRETE DETAIL

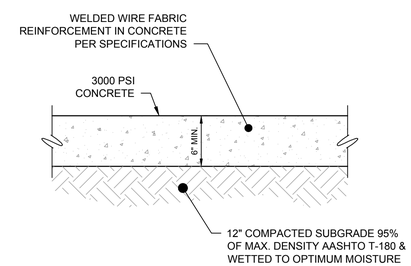

NOTES:

1. CRACK CONTROL (CONTRACTION) JOINTS @ 5' O.C. FOR SIDEWALKS AND 10' O.C. FOR DRIVEWAYS, UNLESS OTHERWISE NOTED.
2. EXPANSION JOINTS TO BE 1/2" WITH PRE-MOLDED JOINT FILLER MATERIAL.
3. CONTRACTOR TO CONSTRUCT CONTRACTION JOINTS INTO PANELS THAT ARE APPROX. SQUARE. WHEN THIS IS NOT POSSIBLE, RECTANGULAR PANELS CAN BE USED IF THE LONG DIMENSION IS NO MORE THAN 1.25 TIMES THE SHORT DIMENSION.

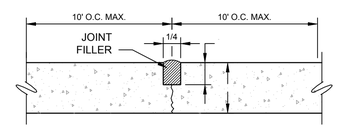

UNDOWELED CONTRACTION (CONTROL) JOINT

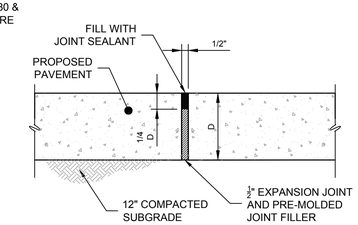

EXPANSION JOINT

2 **DETAIL**
SCALE: NTS

TETRA TECH
www.tetratech.com
201 EAST PINE STREET, SUITE 1000
ORLANDO, FL 32801
PHONE: (407) 839-3955 FAX: (407) 839-3790

Michael B. Saxton, P.E.
P.E. No. 71506, FL
201 East Pine Street, Suite 1000
Orlando, Florida 32801
Engineering Business No. 2429

DATE

MARK	DATE	DESCRIPTION	BY

CITY OF DELTONA, FL
TIPTON DRIVE
STORMWATER IMPROVEMENTS
DETAILS

Project No.:	200-08534-12007
Designed By:	MBS
Drawn By:	CIS
Checked By:	RKC

C-504

Copyright: Tetra Tech

Bar Measures 1 inch

1/30/2013 10:25:40 AM- P:\IER\08534\200-08534-12007\CAD\SHEETFILES\C-504 DETAILS.DWG - LOPEZ, HERNAN

ADDENDUM # 1

CITY OF DELTONA
BID # PW 13-06
March 8, 2013

TIPTON DRIVE IMPROVEMENTS

All contents of this addendum shall be incorporated into the solicitation documents and the ensuing contract with the awarded contractor.

This addendum is to answer questions and clarify issues that have been brought up during the solicitation process.

Questions and inquiries are being accepted up to seven days prior to the bid opening. The last day and time questions and RFI's for this bid will be accepted are Friday, March 8, 2013. Therefore, no further questions or RFI's will be accepted regarding this project.

Addendums may be issued up to 48 hours prior to the bid opening due time.

City of Deltona is not responsible for third party plan rooms or third party plan holders. All documents pertaining to this bid can be downloaded from www.demandstar.com

CLARIFICATIONS:

a. A bid bond is required for this solicitation.

b. The engineer's estimate for this project is $260,000.

c. Bids shall be mailed to or dropped off at 255 Enterprise Road, Deltona, Florida 32725. Bids shall not be accepted at City Hall.

d. A Payment and Performance Bond is required for this project from the awarded Contractor. Payment and Performance Bond is required to be registered with Volusia County prior to a Notice to Proceed being issued. Proof of registration with Volusia County is required.

e. Contract time is: Substantial completion is 120 days. 30 additional days to final completion. Total Project completion is 150 days. Contract time includes permitting and the entire scope of work to complete this project.

f. Liquidated damages will be in effect for this contract ($1,000 per day).

g. The Work shall be performed by a General Contractor Licensed in the State of Florida. Contract shall not be awarded unless proof of valid license(s) is provided.

h. The City of Deltona is seeking Contractors who have proven past, positive experiences in projects of similar and same size of scope of work as the Prime Contractor. Contractors who cannot prove past, positive experiences in projects of similar and same size of scope of work as the Prime Contractor will not be considered for award.

i. References are required with bid submittals. References shall contain descriptions of work that are of similar and same size of scope of work. 8 references are required with submittals. References shall contain the Owners contact information for the projects referenced. References with a Contractor listed as the Owner shall not be accepted.

j. There are two places shown on the plans with potential water main conflicts. The plans mention "size and depths shown are unknown." Please note that at Tradewinds and Cavern Terrace, Sheet C-101, the water main is 4" AC and is 2.50 feet deep. At Sheffield and Elida, Sheet C-102, the water main is 8" AC and is 4.0 feet deep.

k. There is a potential water main conflict at the intersection of Tradewinds and Sheffield, near the inlet identified as SD-12. It is not labeled on the drawings but the Bid Form will establish the unit prices for water main conflicts and the Contractor will be paid for actual installed quantities.

l. If water main deflection is required on an AC water main the existing pipe shall be restrained via a thrust collar installed in accordance with the City of Deltona Standard Details.

m. All pipe material related to this project is proposed as RCP. ADS N12 is a product approved by the City of Deltona as an alternative for pipe material identified as RCP. HDPE is acceptable for material placed in areas that are not under the road.

n. Restoration activities shall restore the swale in accordance with the detail provided in the documents.

o. Any details not shown within the plans or drawings shall follow the City of Deltona standards manual.

p. Should the awarded Contractor encounter sprinkler systems, planted vegetation or older utility lines within the right-of-way. The City of Deltona requires the awarded Contractor to be customer friendly in letting the citizen know ahead of time (1 week minimum) that if there is a sprinkler system or planted vegetation within the right-of-way they have the option to remove the items. Should the citizen not remove the items, the Contractor shall be required to cap any irrigation system and return the sprinkler heads to the citizen.

QUESTIONS:

Question # 1 – Is this a unit price bid or lump sum?

Answer # 1 – There are unit price items and lump sum items. Award of bid will be made to the lowest, responsive and responsible bidder who meets the criteria of this solicitation.

Question # 2 –What permits are involved with this project?

Answer # 1 – The St. Johns WMD permit has been obtained. The project appears to be too small for a Stormwater Pollution Prevention Permit (SWPP). Should the awarded Contractor need to clear some extra areas for storage, it shall be the awarded Contractors responsibility to obtain the SWPP permit. The City of Deltona does not issue right-of -way use permits for its own projects.

Question # 3 – What is the amount for the testing allowance??

Answer # 3 – The testing allowance is listed as $3,000.00.

The bid due date remains Wednesday, March 13, 2013 at 2:00 p.m. All prospective bidders are hereby instructed not to contact the Engineer of Record or any member of the City of Deltona Commission, City Manager, or City of Deltona Staff members other than the noted contact person regarding this Invitation to Bid or their bid proposal at any time during the solicitation or award process. Any such contact shall be cause for rejection of your bid proposal.

All inquiries are to be directed to the Purchasing Agent for the Public Works Division at the City of Deltona. Contact for this solicitation is: Brian Boehs, Purchasing Agent. Email address is bboehs@deltonafl.gov. Phone is 386-878-8955.

ALL OTHER SPECIFICATIONS AND CONDITIONS REMAIN UNCHANGED.

RECEIPT OF THIS ADDENDUM IS HEREBY ACKNOWLEDGED

_____
NAME OF BUSINESS

BY: _____
SIGNATURE/DATE

_____
NAME & TITLE, TYPED OR PRINTED

_____
MAILING ADDRESS

_____
CITY, STATE, ZIP CODE

Solicitation Documents and Technical Specifications for Construction of:

TIPTON DRIVE IMPROVEMENTS

City of Deltona Bid # PW 13-06
Tetra Tech #200-08534-12007

February 2013

For the City of Deltona, Florida

BIDDER'S CONTACT AND INFORMATION FORM
(SECTION 00110)

Bidder (Company) Name: American Persian Engineers & Constructors, Inc	F. E. I. N. or SS Number: 59 3527379
Mailing Address: 4436 Old Winter Garden Rd, Orlando, FL 32811	Street Address: 4436 Old Winter Garden Road
City, State, Zip: Orlando, Florida 32811	City, State, Zip: Orlando, Florida 32811
Type of Entity: *(Circle one)* Corporation Partnership Proprietorship Joint Venture	*I hereby certify that this bid is made without prior understanding, agreement, or connection with any corporation, firm, or person submitting a bid for the same materials, supplies or equipment, and is in all respects fair and without collusion or fraud. I agree to abide by all conditions of this bid and certify that I am authorized to sign this bid for the Bidder.* X Authorized Signature (Manual)
Incorporated in the State of: Florid Year: 1998	Typed or Printed Name: Majid Roulodi
Telephone Number: (407) 522-0530	Title: President
Fax Number: (407) 532-8332	
Email contact info: majid@apec.us	

SECTION 00300

BID RESPONSE FORM

Proposal of American Persian Engineers & Constructors, Inc, hereinafter called "Bidder", a Corporation doing business as General Contractor (CG) to the City of Deltona, Florida hereafter called "Owner". The Bidder, in compliance with the Owner's invitation for bids for the construction of:

City of Deltona

ITB #PW-13-06

TIPTON DRIVE IMPROVEMENTS

having examined the plans and specifications with related documents and the site of the proposed work, and being familiar with all of the conditions surrounding the construction of the proposed project including the availability of materials and labor, hereby proposes to furnish all labor, materials, and supplies; and to construct the project in accordance with the Contract Documents, within the time set forth herein, and at the prices stated below. These prices are to cover all expenses incurred in performing the work required under the Contract Documents, of which this proposal is a part.

Bidder accepts all of the terms and conditions of the Advertisement for Bids and General Conditions, Instructions, and Information for Bidders.

Bidder hereby agrees to commence work under contract on or before a date to be specified in a written "Notice to Proceed" of the Owner and to substantially complete the Project within 120 consecutive calendar days and to fully complete the Project within 150 consecutive calendar days thereafter as stipulated in the specifications. Bidder further agrees to pay any liquidated damages, as specified in the Agreement, for each consecutive calendar day thereafter.

Bidder has examined and carefully studied the Bidding Documents and the following addendum receipt of which is hereby acknowledged:

No. _____	Dated: _____	No. _____	Dated: _____
No. _____	Dated: _____	No. _____	Dated: _____
No. _____	Dated: _____	No. _____	Dated: _____
No. _____	Dated: _____	No. _____	Dated: _____

BASE PROPOSAL: Bidder agrees to perform all of the work described in the specifications and shown on the plans for the sum shown in the schedule below:

Item No.	Description	Qty	Unit	Unit Price	Total Price
General Administrative					
1	Mobilization/Demobilization	1	LS	$ 12,000.00	$ 12,000.00
2	General Requirements, Bonds, Permits, etc.	1	LS	$ 10,000.00	$ 10,000.00
3	Indemnification	1	LS	$ 100.00	$ 100.00
4	Testing Allowance [Roadway and Pipe Compaction]	1	LS	$ 500.00	$ 500.00
Stormwater Sitework					
5	Layout and As-Built Survey	1	LS	$ 13,000.00	$ 13,000.00
6	Temporary Erosion Protection	1	LS	$ 7,477.95	$ 7,477.95
7	Maintenance of Traffic	1	LS	$ 20,000.00	$ 20,000.00
8	Clearing and Grubbing	1	LS	$ 20,000.00	$ 20,000.00
9	Site Grading	1	LS	$ 20,000.00	$ 20,000.00
10	Remove and Dispose Existing Drainage Inlets	4	EA	$ 2,000.00	$ 8,000.00
11	Remove and Dispose Existing Drainage Culverts	225	LF	$ 40.00	$ 9,000.00
12	Remove and Replace Driveway	90	SY	$ 40.00	$ 3,600.00
13	Remove and Replace Pavement	550	SY	$ 50.00	$ 27,500.00
14	Furnish and Install 14" x 23" Elliptical RCP	55	LF	$ 110.00	$ 6,050.00
15	Furnish and Install 18" Reinforced Concrete Pipe	55	LF	$ 74.00	$ 4,070.00
16	Furnish and Install 36" Reinforced Concrete Pipe ("<10-ft depth]	775	LF	$ 75.00	$ 58,125.00
17	Furnish and Install 36" Reinforced Concrete Pipe (>10-ft depth]	275	LF	$ 110.00	$ 30,250.00
18	Type "C" Inlet	3	EA	$ 1,500.00	$ 4,500.00
19	Type "D" Inlet - 6-ft Alternate B	2	EA	$ 4,100.00	$ 8,200.00
20	Type "J" Manhole - 6-ft Alternate A ("<10-ft depth]	2	EA	$ 6,840.00	$ 13,680.00
21	Type "I" Manhole - 6-ft Alternate A (">10-ft depth]	2	EA	$ 8,500.00	$ 17,000.00
22	Modified Type "H" Outfall Structure	1	EA	$ 7,540.00	$ 7,540.00
23	Furnish and Install 36" Headwall	1	EA	$ 5,000.00	$ 5,000.00
24	Furnish and Install Rip Rap	110	SY	$ 100.00	$ 11,000.00
	Water Main Conflict				
25	45^2 Bend [FLG.]	4	EA	$ 350.00	$ 1,400.00
26	Furnish and Install PVC C900 Pipe [restrained joint]	35	LF	$ 120.00	$ 4,200.00
27	Remove and Replace Pavement Related to Water Main Conflict	40	SY	$ 100.00	$ 4,000.00
	TOTAL BASE BID			**$**	**326,192.95**
TOTAL BASE BID IN WORDS : THREE HUNDRED TWENTY SIX THOUSAND ONE HUNDRED NINETY TWO DOLLARS AND NINETY FIVE /100CENTS					

The unit prices provided above shall include all labor, materials, bailing, shoring, removal, overhead, profit, insurance, etc., to cover the finished work of the several kinds required. Any changes to the Work after issuance of the Notice of Award shall be processed in accordance with Articles 10, 11, and 12 of the General Conditions (Section 00700) and Article 5 of the Agreement with the Owner.

Bidder understands that the Owner reserves the right to reject any or all bids and to waive any informalities in the bidding.

A bid security, attached in the sum of five (5) percent of the Total Bid Amount, is to become the property of the Owner in the event contract and bond are not executed within thirty (30) days of the Owner issuing a Notice of Award, as liquidated damages for the delay and additional expense to the Owner caused thereby.

Respectfully submitted:

By: APEC, Inc.
(Business Name)

(SEAL - if bid is by corporation)

4436 Old Winter Garden Rd
(Business Address)

Orlando, Florida 32811
(Business City, State, Zip Code)

(Signature)

Majid Foulad
(Printed Name)

President
(Title)

SCHEDULE OF BASE BID MANUFACTURERS/SUPPLIERS
(SECTION 300A)

The Contract Documents are based upon the equipment or products available from the manufacturers/suppliers denoted as "A", "B", etc. However, the Bidder must indicate in his Bid which Base Bid manufacturer/supplier he intends to use for each item of equipment listed by circling one (1) of the listed manufacturers/suppliers. Should the Bidder fail to circle a named supplier, he hereby agrees to provide the item listed as "A". After receipt of bids, the Bidder may not substitute for any manufacturer or supplier circled. Listed manufacturers/suppliers identified as deductive alternates will be considered as a deductive alternate as presented in the Deductive Alternate Section of the Bid Form.

If the Bidder desires to propose one (1) or more substitution or "or equal" manufacturers/suppliers, he may write in the name of such substitution or "or equal" in the spaces provided on the pages following the lists, but he must, nevertheless, also circle one of the listed manufacturers/suppliers. All substitutions or "or equal" items must be identified at the time of Bid (see paragraph 6.7 of the General Conditions as amended by the Supplementary Conditions). Substitutions or "or equal" items will **not** be considered when determining the Apparent Lowest Bidder. Substitutions or "or equal" items will **not** be evaluated or considered until after the "Effective Date" of the Agreement. The Bidder shall base his Bid on providing one of the listed manufacturers/suppliers and shall assume for bidding purposes that all substitutions or "or equal" items will not be accepted.

If the proposed substitution or "or equal" manufacturer/supplier is determined "not equivalent" by the Engineer, the Bidder must use the circled manufacturer/supplier. If the Bidder fails to indicate which listed manufacturer/supplier he intends to use or if a substitution or an "or equal" is rejected, he must use the manufacturer/supplier listed as "A". Also, if the Bidder circles more than one listed manufacturer/supplier, he must use the first manufacturer/supplier circled (unless a substitution or "or equal" is approved).

Each proposed substitution or "or equal" will be evaluated in accordance with Paragraph 6.7 of the General Conditions as amended by the Supplementary Conditions following the Effective Date of the Agreement.

In addition to the reimbursement required under Paragraph 6.7 of the General Conditions, the Contractor shall also reimburse the Owner for any engineering costs directly attributable to the change in manufacturers/suppliers, caused by the acceptance of proposed substitution or "or equal" items, such as; additional field trips for the Engineer, additional redesign costs, and additional review costs, etc. Other costs directly attributable to the change in manufacturers/suppliers caused by the acceptance of proposed substitution or "or equal" items such as increased electrical requirements, larger building, modifications to structures, additional pumps, piping or tankage, etc., shall be borne by others and not by the Owner. Bidder further agrees that the use of substitute equipment offered will not affect the completion date.

The Owner may request, and the Bidder shall supply, complete information on proposed substitution or "or equal" items prior to the Notice of Award.

Category I - **SCHEDULE OF BASE BID MANUFACTURERS / SUPPLIERS (SECTION 300A)**

Item No.	Equipment Item or Material	Specification Section No.	Manufacturer/Supplier
1.	RCP Pipe	036112	County Materials
2.			
3.			
4.			
5.			
6.			
7.			

SUBSTITUTION LIST OF MANUFACTURERS / SUPPLIERS
(SECTION 00300B)

Bidder proposes the following substitutions and "or equal" items of alternate manufacturers/suppliers for the equipment of material categories so identified:

	Equipment Item Material	Drawing No.	Spec. Section	Substitute/"or equal" Manufacturer/Supplier (List One Only)	Proposed Price Deduct
1.	Alternate ADS Pipe		09905	Round RCP Pipe	- 500.00
2.					
3.					
4.					
5.					
6.					
7.					
9.					
10.					

SUBSTITUTIONS AND "OR EQUAL"

The above signed as Bidder agrees that substitutions or "or equal" items will not be considered until after the "Effective Date of the Agreement" and will be evaluated in accordance with Paragraphs 6.7, 6.7.1 and 6.7.2, of the General Conditions as amended by the Supplementary Conditions. If Bidder intends to propose substitutions or "or equal" items after the "Effective Date of the Agreement", it is agreed that these items will be listed on the Substitution List included with the Bid (form provided herein). Only the proposed substitutions or "or equal" items listed on the Substitution List will be evaluated by the Engineer in accordance with the General Conditions.

QUESTIONNAIRE FORM
(SECTION 00301)

DATE: March 13, 2013

PROJECT IDENTIFICATION **City of Deltona – Public Works Division**
TIPTON DRIVE IMPROVEMENTS

NAME OF BIDDER: American Persian Engineers & Constructors, Inc

BUSINESS ADDRESS: 4436 old Winter Garden Rd, Orlando, Florida 32811

TELEPHONE NO: 407-522-0530

CONTRACTOR'S FLORIDA LICENSE NO: CGC060385

The signed bidder warrants the truth and accuracy of all statements and answers herein contained. Include additional sheets if necessary.

1. How many years has your organization been in business as a General Contractor? 14 years

2. Have you ever failed to complete work awarded to you? If so, where and why?
   NO

3. Name three (3) municipalities or government entities for which you have performed similar projects as this one and to which you refer?
   Orange County
   City of Orlando } See attachment 1
   Osceola County

4. Have you personally inspected the site of the proposed Work? Describe any anticipate problems with the site and your proposed solutions.
   Yes

5. Will you Subcontract any part of this Work? If so, describe which portion(s).
   - Maintenance of Traffic
   - Concrete
   - Survey (Layout and As Built Survey)

6. What equipment do you own that is available for the Work? (attach additional sheets if necessary)

See Attachment 2

7. What equipment will you purchase for the Work?

NA

8. What equipment will you rent for the Work?

NA

9. The following is given as a summary of the Financial Statement of the undersigned: (List Assets and Liabilities and use insert sheet if necessary.)

See Attachment 3

10. State the true and exact, correct, and complete name under which you do business.
Bidder is: American Persian Engineers & Constructors, Inc

SUB-CONTRACTORS AND AFFILIATES FORM
(SECTION 00301A)

The following are a list of Sub Contractors or Affiliates that will be utilized in this project. Use additional sheets if necessary.

1. **Firm Name:** Flash Rite, Inc
   Trade: Mobilization of Traffic
   Firm Owner: Lisa Metcalf
   Firm Address: 160 W. Evergreen Ave, Longwood FL 32750
   Firm Phone Number: 407-834-0408

2. **Firm Name:** Tea Brick Pavers
   Trade: Concrete
   Firm Owner: Lindomar Teixeira
   Firm Address: 324 Red Rose Circle, Orlando FL 32835
   Firm Phone Number: 407-521-9424

3. **Firm Name:** Lebron Group And Surveying & Mapping
   Trade: Layout and As Built Survey
   Firm Owner: George E. Survy
   Firm Address: 421 W Robinson St, Orlando, FL 32825
   Firm Phone Number: 407-781-9329

4. **Firm Name:** _____
   Trade: _____
   Firm Owner: _____
   Firm Address: _____
   Firm Phone Number: _____

5. **Firm Name:** _____
   Trade: _____
   Firm Owner: _____
   Firm Address: _____
   Firm Phone Number: _____

REFERENCES FORM
(SECTION 00301B)

The City of Deltona is seeking Contractors who have proven past, positive experiences in projects of similar and same size of scope of work. These references are required with your submittals. References shall contain the Owners contact information for the projects referenced. References with another Contractor listed as the Owner shall not be accepted. Contractors not having past, positive experiences in projects of similar and same size of scope of work, as the Prime Contractor, will not be considered. References which are located in foreign countries are not acceptable.

1. **Project Name:** Plumosa Avenue (Home Depot)
   Project Value: $1,577,412.31
   Project Description: Stormwater Drainage Improvement, Piping installation of 18" to 48" RCP etc...
   Project Owner: City of Casselberry
   Owner contact information: Mark Gisclar - 407 262 7725 ext. 1234 / mgisclar@casselberry.org
   Project Location: City of Casselberry
   Project Start and End Dates: September 2008 To November 2009

2. **Project Name:** Small Construction Project (Term Contract)
   Project Value: $750,000.00
   Project Description: Various Projects including Drainage System, Sewer line improvements etc...
   Project Owner: City of Ocoee
   Owner contact information: Stephen Krug 407-905-3170 / skrug@ci.ocoee.fl.us
   Project Location: City of Ocoee
   Project Start and End Dates: March 2011 Term Contract

3. **Project Name:** Taft Vineland Road Extension
   Project Value: $3,289,417.00
   Project Description: Sheet Piling, Canal Scope Sewer Line Improvement & Roadway etc...
   Project Owner: Orange County
   Owner contact information: Julie Naditz / 407-836-8030 / julie.naditz@ocfl.net
   Project Location: Orange County
   Project Start and End Dates: December 2009 To February 2011

4. **Project Name:** Convention Center
   Project Value: $900,000.00
   Project Description: Emergency Repairs for Stormwater, Sewer Line & Lateral, Storm Drains etc...
   Project Owner: Orange County Convention Center
   Owner contact information: Jude Gold / 407-685-5812 / jude.gold@occc.net
   Project Location: Orange County Convention Center
   Project Start and End Dates: Various Short days / Term Contract

REFERENCES FORM
(SECTION 00301B CONTINUED)

5. **Project Name:** Country Club Road (Rinehol to CR 46A) Improvements
Project Value: $1,052,075.35
Project Description: Roadway Improvement including stormwater, Drainage system etc...
Project Owner: Seminole County
Owner contact information: Bill Glennen / 407-665-5654 / bglennen@seminolecountyfl.gov
Project Location: Seminole County.
Project Start and End Dates: April 2009 To March 2010

6. **Project Name:** Crest Avenue To Dreyfus Reuse Main
Project Value: $699,218.67
Project Description: Construction of 16" reclaimed water, wastewater collection, Storm Sewer, Drainage Improvements e
Project Owner: City of Winter Garden
Owner contact information: Donald Cochran / 407-656-4111 ext 2263 / dcochran@wintergarden-fl.gov
Project Location: City of Winter Garden
Project Start and End Dates: Mai 14, 2009 for 150 Days

7. **Project Name:** General Rees Avenue Improvements
Project Value: 862,219.10
Project Description: Reconstruction of General Rees Avenue, Roadway, Drainage System, Sewer system Improvements
Project Owner: Orange County
Owner contact information: Elizabeth White / 407-836-7751 / Elizabeth.white@ocfl.net
Project Location: Orange County
Project Start and End Dates: January 2010 To December 2010

8. **Project Name:** Triplet Lake Drive & US 17-92 Intersection Improvements
Project Value: 3,056,086.00
Project Description: Realignment of Triplet Lake Drive & US 17-92 As well as Drainage System Improvements etc.
Project Owner: City of Casselberry
Owner contact information: Mark Gisclar / 407-262-7725 ext 1234 / mgisclar@casselberry.org
Project Location: City of Casselberry
Project Start and End Dates: January 22, 2007 To February 22, 2008

BID BOND FORM
(SECTION 00410)

Bond No. 3215604

KNOWN ALL MEN BY THESE PRESENTS, that we, the undersigned, American Persian Engineers & Constructors, Inc. as Principal, and Bankers Insurance Company as Surety, are hereby held and firmly bound unto the City of Deltona, Florida as Owner in the penal sum of, (five percent 5%) of the Contract Bid Five Percent of Amount Bid (5%) for the payment of which, well and truly to be made, we hereby and severally bind ourselves, successors and assigns to pay Owner upon default of Bidder the penal sum set forth on the face of this Bond. Signed, this 13th day of March, 2013.

The condition of the above obligation is such that whereas the Principal has submitted to the City of Deltona, Florida a certain bid, attached hereto and hereby made a part hereof, to enter into a contract in writing, for the **TIPTON DRIVE IMPROVEMENTS.**

NOW THEREFORE,

1. Default of Bidder shall occur upon the failure of Bidder to deliver within the time required by the Bidding Documents the executed Agreement required by the Bidding Documents and any performance and payment bonds required by the Bidding Documents and Contract Documents.

2. This obligation shall be null and void if:

   2.1 Owner accepts Bidder's bid and Bidder delivers within the time required by the Bidding Documents (or an extension thereof agreed to in writing by Owner) the executed Agreement required by the Bidding Documents and any performance and payment bonds required by the Bidding Documents and Contract Documents, or

   2.2 All bids are rejected by Owner, or

   2.3 Owner fails to issue a notice of award to Bidder within the time specified in the Bidding Documents (or any extension thereof agreed to in writing by Bidder and, if applicable, consented to by Surety when required by paragraph 5 hereof).

3. Payment under this Bond will be due and Payable upon default of Bidder and within thirty (30) calendar days after receipt of Bidder and surety of written notice of default from Owner which notice will be given with reasonable promptness, identifying this Bond and the Project and including a statement of the amount due.

4. Surety waives notice of any and all defenses based on or arising out of any time extension to issue notice of award agreed to in writing by Owner and Bidder, providing that the time for issuing notice of award including extensions shall not in the aggregate exceed one hundred twenty (120) days from Bid Due without Surety's written consent.

5. No suite or action shall be commenced under this Bond prior to thirty (30) calendar days after the notice of default required in paragraph 3 above is received by Bidder and Surety, and in no case later than one year after Bid Due Date.

6. Any suite or action under this Bond shall be commenced only in a court of competent jurisdiction located in the state in which the Project is located.

7. Notice required hereunder shall be in writing and sent to Bidder and Surety at their respective addresses shown on the face of this Bond. Such notices may be sent by personal delivery, commercial courier or by United States Registered or Certified Mail, return receipt requested, postage pre-paid, and shall be deemed to be effective upon receipt by the part concerned.

8. Surety shall cause to be attached to this Bond a current and effective Power of Attorney evidencing the authority of the officer, agent or representative who executed this Bond on behalf of Surety to execute, seal and deliver such Bond and bind the Surety thereby.

9. This bond is intended to conform to all applicable statutory requirements. Any applicable requirement of any applicable statute that has been omitted from this Bond shall be deemed to be included herein as if set forth at length. If any provision of the Bond conflicts with any applicable provision of any applicable statute, then the provision of said statute shall govern and the remainder of the Bond that is not in conflict therewith shall continue in full force and effect.

10. The term "bid' as used herein includes a bid, offer or proposal as applicable.

IN WITNESS WHEREOF, the Principal and the Surety have hereunto set their hands and seals, and such of them as are corporations have caused their corporate seals to be hereto affixed and these presents to be signed by their proper officers, the day and year first set forth above.

Principal (Print Full Name):

American Persian Engineers & Constructors, Inc.

By: _____ (LS)

Title: President

Attest: _____ President
Signature and Title

Surety (Print Full Name):

Bankers Insurance Company _____ (Seal)
Surety's Name and Corporate Seal

By: _____
Signature (attach power of attorney)

Title: Allyson L. Foss, Attorney-In-Fact & Florida Licensed Resident Agent

Attest: Kathy Clawson
Signature and Title
Kathy Clawson, Witness

March 13th, 2013
(DATE)

Inquiries: (407) 834-0022

IMPORTANT – Surety companies executing bonds must appear on the Treasury Department's most current list (Circular 570 as amended) and be authorized to transact business in the State of Florida.

Power of Attorney

3215604

Bankers Insurance Company

KNOW ALL MEN BY THESE PRESENTS, that **BANKERS INSURANCE COMPANY**, a corporation duly organized under the laws of the State of Florida, and having its principal office in the City of St. Petersburg, Pinellas County, Florida, does hereby nominate, constitute and appoint:

* Jack W. Guignard, Bryce R. Guignard, Jorge L Bracamonte, Paul J. Ciambriello, Allyson L. Foss, April L. Lively, Jennifer L. McCarta and or Margie L. Morris

of the City of Longwood, Seminole County, State of Florida, its true and lawful Attorney-in-fact, with full power and authority hereby conferred upon him/her to make, execute, seal and deliver for and on its behalf, as Surety, as its act and deed, any and all bonds, undertakings consent or Agreement not exceeding the sum of Three Million and xx/100---------- $3,000,000.00 which this Company may be authorized to write.

This Power of Attorney is granted and is signed and sealed under and by the authority of the following resolutions adopted by the Board of Directors of Bankers Insurance Company, and now in force to-wit:

BE IT RESOLVED, that the Chairman of the Board, President and any Vice President of the Corporation are hereby authorized to execute Powers of Attorney, qualifying the Attorney(s)-in-Fact named in the Powers of Attorney to execute, on behalf of the Corporation, bonds, undertakings and contracts of suretyship; and that the Secretary or any Assistant Secretary of the Corporation are hereby authorized to attest the execution of any such Power of Attorney.

BE IT FURTHER RESOLVED, that the signatures of such officers may be affixed to any such Power of Attorney or to any certificate relating thereto by facsimile, any and such Power of Attorney or certificate bearing such facsimile signatures shall be valid and binding upon the corporation when so affixed in the future with respect to any bond, undertaking or contract of suretyship to which it is attached.

IN WITNESS WHEREOF, Bankers Insurance Company has caused these presents to be executed by their duly authorized officers as of this 1st day of July, 2010.

ATTEST:

Nancy C. Haire

Nancy C. Haire, Assistant Secretary

BANKERS INSURANCE COMPANY

By: W. Martin IV

Wilbur L. Martin, IV President

STATE OF FLORIDA)
COUNTY OF PINELLAS)

The foregoing instrument was acknowledged before me 1st day of July, 2010 by David K Meehan and Nancy C. Haire, as President and Assistant Secretary, respectively, of Bankers Insurance Company, a Florida corporation, on behalf of the corporation.

(NOTARY PUBLIC)

I, the undersigned, Assistant Secretary of Bankers Insurance Company do hereby certify that the original Power of Attorney, of which the foregoing is a full, true and correct copy, is in full force and effect.

IN WITNESS WHEREOF, I have hereunto subscribed my name as Assistant Secretary, and affix the corporate seal of the Corporation this 13th day of March, 2013

(SEAL)

Nancy C. Haire

Nancy C. Haire, Assistant Secretary

CORPORATE RESOLUTION FORM
(SECTION 00420)

I, Majid Fouladi, President ~~Secretary~~ of APEC, Inc, a corporation organized and existing under the laws of the State of Florida, hereby certify that at a meeting of the Board of Directors of the Corporation duly called and held on March 13, 2013 at which a quorum was present and acting throughout, the following resolutions were adopted and are now in full force effect:

RESOLVED that the following individuals of this corporation are authorized to execute on behalf of this corporation A Bid and Agreement to City of Deltona for the construction of Tipton Drive Improvements.

I further certify that the names of the officers of this corporation and any other persons authorized to act under this resolution and their official signatures are as follows:

NAME	OFFICE	OFFICIAL SIGNATURE
Majid Fouladi	President	

IN WITNESS THEREOF, I have hereunto subscribed my name as Secretary and affixed the seal of the corporation this 13 day of March, 2013

HOLD HARMLESS AND INDEMNITY AGREEMENT
(SECTION 00430)

APEC, Inc, agrees through the signing of this document by an authorized party or agent that it shall defend, indemnify and hold harmless the City of Deltona, and its agents, employees, and public officials from and against all suits, losses, claims, demands, judgments of every name and description arising out of or incidental to the performance of this contract or work performed thereunder, whether or not due to or caused by the negligence of the City of Deltona, its agents, employees, and public officials excluding only the sole negligence of the City of Deltona, its agents, employees, and Public Officials.

This provision shall also pertain to any claims brought against the City of Deltona, its agents, employees, and public officials by an employee of the named Contractor, any Sub-contractor, or anyone directly or indirectly employed by any of them.

The Contractor's obligation to indemnify the City of Deltona, its agents, employees and public officials under this provision shall be limited to $1,000,000 per occurrence which the parties agree bears a reasonable commercial relationship to the contract.

The Contractor agrees to accept, and acknowledges as adequate remunerations, the consideration of $10, which is part of the agreed bid price, the promises contained herein, and other good and valuable consideration, the receipt of which is hereby acknowledged, for agreement to enter into this Hold Harmless and Indemnity Agreement.

CONTRACTOR

March 13, 2013
DATE

DRUG-FREE WORKPLACE FORM
(SECTION 00440)

The undersigned Bidder in accordance with Florida Statute 287.087, hereby certifies that APEC, Inc does:
(*Name of Business*)

1. Publish a statement notifying employees that the unlawful manufacture, distribution, dispensing, possession, or use of a controlled substance is prohibited in the workplace and specifying the actions that will be taken against employees for violations of such prohibition.

2. Inform employees about the dangers of drug abuse in the workplace, the business's policy of maintaining a drug-free workplace, any available drug counseling, rehabilitation, and employee assistance programs, and the penalties that may be imposed upon employees for drug abuse violations.

3. Give each employee engaged in providing the commodities or contractual services that are proposed a copy of the statement specified in subsection (1).

4. In the statement specified in subsection (1), notify the employees that, as a condition of working on the commodities or contractual services that are under bid, the employee will abide by the terms of the statement and will notify the employer of any conviction of, or plea of guilty or nolo contendere to, any violation of Chapter 893 or of any controlled substance law of the United States or any state, for a violation occurring in the workplace no later than five (5) days after such conviction.

5. Impose a sanction on, or require the satisfactory participation in a drug abuse assistance or rehabilitation program if such is available in the employee's community, by any employee who is so convicted.

6. Make a good faith effort to continue to maintain a drug-free workplace through implementation of this section.

As the person authorized to sign the statement, I certify that this firm complies fully with the above requirements.

X _____
Bidder's Signature

March 13, 2013
Date

PROPOSER'S CERTIFICATION FORM
(SECTION 00460)

I have carefully examined the Request for Proposal, Instructions to Proposers, General and/or Special Conditions, Vendor's Notes, Specifications, proposed agreement and any other documents accompanying or made a part of this Request for Proposal.

I hereby propose to furnish the goods or services specified in the Request for Proposal at the prices and rates quoted in my Proposal. I agree that my Proposal will remain firm for a period of up to one hundred twenty (120) days in order to allow the City adequate time to evaluate the Proposal.

I agree to abide by all conditions of the Proposal and understand that a background investigation may be conducted by the City of Deltona prior to award.

I certify that all information contained in this Proposal is truthful to the best of my knowledge and belief. I further certify that I am a duly authorized to submit this Proposal on behalf of the vendor / contractor as its act and deed and that the vendor / contractor is ready, willing and able to perform if awarded the contract.

I further certify, under oath, that this Proposal is made without prior understanding, agreement, connection, discussion, or collusion with any other person, firm or corporation submitting a Proposal for the same product or service; no officer, employee or agent of the City of Deltona Government or of any other Proposer interested in said Proposal; and that the undersigned executed this Proposer's Certification with full knowledge and understanding of the matters therein contained and was duly authorized to do so.

Name of Business

By: _____
Signature

Majid Fouladi, President
Name & Title, Typed or Printed

4436 Old Winter Garden Rd
Mailing Address

Orlando, Florida 32811
City, State, Zip Code

(407) 522-0530
Telephone Number

Sworn to and subscribed before me

This 13 day of

March, 2013

_____
Signature of Notary

Notary Public, State of Florida

Personally known
-OR-
Produced Identification _____

ELIZABETH DIAZ
Notary Public - State of Florida
My Comm. Expires Dec 8, 2014
Commission # EE 47876

SWORN STATEMENT UNDER SECTION 287.133(3)(A), FLORIDA STATUTES, ON PUBLIC ENTITY CRIMES (SECTION 00470)

THIS FORM MUST BE SIGNED IN THE PRESENCE OF A NOTARY PUBLIC OR OTHER OFFICER AUTHORIZED TO ADMINISTER OATHS.

This sworn statement is submitted to the City of Deltona by Majid Fouladi - President
(Individual's name and title)

For American Persian Engineers & Constructors, Inc.
(Name of entity submitting sworn statement)

Whose business address is 4436 Old Winter Garden Road
Orlando, Florida 32811

And (if applicable) its Federal Employer Identification Number (FEIN) is 59-3527379
(if the entity has no FEIN, include the Social Security Number of the individual signing this sworn statement)

1. I understand that a "public entity crime" as defined in Section 287.133(1)(g), Florida Statutes, means a violation of any State or Federal law by a person with respect to and directly related to the transaction of business with any public entity or with an agency or political subdivision of any other state or with the United States, including, but not limited to, any bid or contract for goods or services to be provided to any public entity or an agency or political subdivision of any other state or a of the United States and involving antitrust, fraud, theft, bribery, collusion, racketeering, conspiracy, or material misrepresentation.

11. I understand that "convicted" or "conviction" as defined in Paragraph 287.133(1)(b), Florida Statutes, means a finding of guilt or a conviction of a public entity crimes, with or without an adjudication of guilt, in any Federal or State trial court of record relating to charges brought by indictment or information after July 1, 1989, as a result of a jury verdict, non-jury trial, or entry of a plea of guilty or nolo contendere.

12. I understand that an "affiliate' as defined in Section 287.133(1)(a), Florida Statutes, means:

    A predecessor or successor of a person convicted of a public entity crime: or an entity under the control of any natural person who is active in the management of the entity and how has been convicted of a public entity crime. The term "affiliate" includes those officers, directors, executives, partners, shareholders, employees, members, and agents who are active in the management of an affiliate. The ownership by one (1) person of shares constituting a controlling interest in another person, or a pooling of equipment or income among persons when not for fair market value under an arm's length agreement, shall be a prima facie case that one person controls another person. A person who knowingly enters into a joint venture with a person who has been convicted of a public entity crime in Florida during the preceding thirty-six (36) months shall be considered an affiliate.

13. I understand that a "person" as defined in Section 287.133(1)(e), Florida Statutes, means any natural person or entity organized under the laws of any state or of the United States with the legal power to enter into a binding contract and which bids or applies to bid on contracts for the provision of goods or services let by a public entity, or which otherwise transacts or applies to transact business with a public entity. The term "person" includes those officers, directors, executives, partners, shareholders employees, members, and agents who are active in management of an entity.

14. Based on information and belief, the statement which I have marked below is true in relation to the entity submitting this sworn statement. (You must indicate which statement applies.)

(SECTION 00470 Continued)

NA Neither the entity submitting this sworn statement, nor any officers, directors, executives, partners, shareholders, employees, members, or agent who is active in management of the entity, nor the affiliate of the entity has been charged with and convicted of a public entity crime subsequent to July 1, 1989.

NA The entity submitting this sworn statement, or one or more of the officers, directors, executives, partners, shareholders, employees, members or agent who are active in management of the entity, or an affiliate of the entity, has been charged with and convicted of a public entity crime subsequent to July 1, 1989.

NA The entity submitting this sworn statement, or one or more of the officers, directors, executives, partners, shareholders, employees, members or agents who are active in management of the entity, or an affiliate of the entity, has been charged with and convicted of a public entity crime subsequent to July 1, 1989. However, there has been a subsequent proceeding before an Administrative Law Jury of the State of Florida, Division of Administrative Hearings and the Final Order entered by the Administrative Law Jury determined that it was not in the public interest to place the entity submitting this sworn statement on the convicted vendor list. (You must attach a copy of the final order).

I UNDERSTAND THAT THE SUBMISSION OF THIS FORM TO THE CITY OF DELTONA IS FOR THE CITY ONLY AND, THAT THIS FORM IS VALID THROUGH DECEMBER 31, OF THE CALENDAR YEAR IN WHICH IT IS FILED. I ALSO UNDERSTAND THAT I AM REQUIRED TO INFORM THE CITY PRIOR TO ENTERING IN TO A CONTRACT IN EXCESS OF THE THRESHOLD AMOUNT PROVIDED IN SECTION 287.017, FLORIDA STATUTES, FOR CATEGORY TWO OF ANY CHANGE IN THE INFORMATION CONTAINED IN THIS FORM.

SIGNATURE

March 13, 2013
DATE

State of Florida
County of Orange

Personally appeared before me, the undersigned authority, Majid Fouladi (name of individual signing) who, after first being sworn by me, affixed his/her signature in the space provided above on the 13 day of March, 20 13

NOTARY PUBLIC

My commission expires:
Dec 8, 2014

ELIZABETH DIAZ
Notary Public - State of Florida
My Comm. Expires Dec 8, 2014
Commission # EE 47876

NON COLLUSION AFFIDAVIT FORM
(SECTION 00480)

STATE OF FLORIDA

COUNTY OF VOLUSIA

Majid Fouladi, being first duly sworn deposes and says that:

i. He/She is the President, of APEC, Inc, the Bidder that has submitted the attached Bid;

ii. He/She is fully informed respecting the preparation and contents of the attached Bid and of all pertinent circumstances respecting such Bid;

iii. Such Bid is genuine and is not a collusive or sham Bid;

iv. Neither the said Bidder nor any of its officers, partners, owners, agents, representatives, employees, or parties in interest, including this affidavit, have in any way, colluded, conspired, connived or agreed, directly or indirectly, with any other Bidder, firm or person to submit a collusive or sham Bid in connection with the Contract for which the attached Bid has been submitted; or to refrain from bidding in connection with such Contract; or have in any manner, directly or indirectly, sought by agreement or collusion,, or communication, or conference with any Bidder, firm, or person to fix the price or prices in the attached Bid or of any other Bidder, or to fix any overhead, profit, or cost elements of the Bid price or the Bid price of any other Bidder, or to secure through any collusion, conspiracy, connivance, or unlawful agreement any advantage against (Recipient), or any person interested in the proposed Contract;

v. The price or prices quoted in the attached Bid are fair and proper and are not tainted by any collusion, conspiracy, connivance, or unlawful agreement on the part of the Bidder or any other of its agents, representatives, owners, employees or parties in interest, including this affidavit.

By _____

Sworn and subscribed to before me this 13 day of March, 2013, in the State of Florida, County of Orange.

_____ Notary Public

My Commission expires: Dec 8, 2014

ELIZABETH DIAZ
Notary Public - State of Florida
My Comm. Expires Dec 8, 2014
Commission # EE 47876

TRENCH SAFETY AFFIDAVIT FORM
(SECTION 00490)

(FAILURE TO COMPLETE THIS FORM MAY RESULT IN THE BID BEING DECLARED NON-RESPONSIVE)

American Persion Engineers & Contractors, Inc. (NAME OF CONTRACTOR) hereby provides written assurance that compliance with applicable Trench Safety Standards identified in the Occupational Safety & Health Administration's Excavation Safety Standards (OSHA) 29 C.F.R.S. 1926.650 Subpart P will be adhered to during trench excavation in accordance with Florida Statutes 553.60 through 533.64 inclusive (1990) "Trench Safety Act".

The specific methods of compliance with applicable Trench Safety Standards, and the associated cost of compliance (costs included in the Bid Price), are as follows (attach additional sheets if necessary):

Item and Safety Measure	Cost
laid back of 280 LF Slopes	$ 2,800.00
	$
	$
	$
	$
	$
	$
TOTAL	$ 2,800.00

By the signature of its undersigned authorized representatives, the Bidder hereby assures the CITY OF DELTONA that any such excavation performed by the Bidder will be performed in compliance with all applicable trench safety standards.

By _____

Sworn and subscribed to before me this 13 day of March, 2013 in the State of Florida, County of Orange.

_____ Notary Public

My Commission expires: Dec 8, 2014

ELIZABETH DIAZ
Notary Public - State of Florida
My Comm. Expires Dec 8, 2014
Commission # EE 47876

STATE OF FLORIDA
DEPARTMENT OF BUSINESS AND PROFESSIONAL REGULATION

CONSTRUCTION INDUSTRY LICENSING BOARD
1940 NORTH MONROE STREET
TALLAHASSEE FL 32399-0783

(850) 487-1395

FOULADI, MAJID
AMERICAN PERSIAN ENGINEERS & CONSTRS IN
4436 OLD WINTER GARDEN RD
ORLANDO FL 32811

Congratulations! With this license you become one of the nearly one million Floridians licensed by the Department of Business and Professional Regulation. Our professionals and businesses range from architects to yacht brokers, from boxers to barbeque restaurants, and they keep Florida's economy strong.

Every day we work to improve the way we do business in order to serve you better. For information about our services, please log onto www.myfloridalicense.com. There you can find more information about our divisions and the regulations that impact you, subscribe to department newsletters and learn more about the Department's initiatives.

Our mission at the Department is: License Efficiently, Regulate Fairly. We constantly strive to serve you better so that you can serve your customers. Thank you for doing business in Florida, and congratulations on your new license!

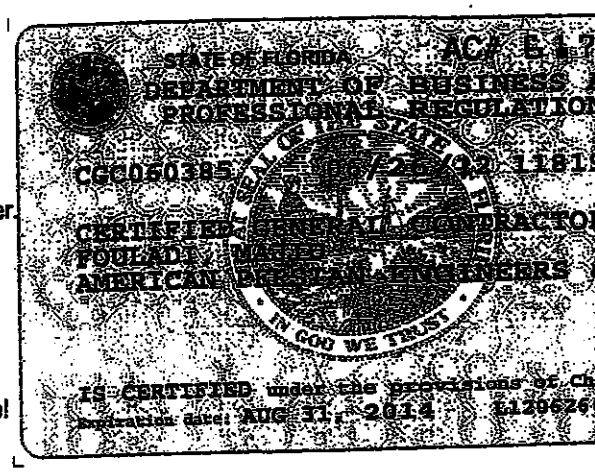

DETACH HERE

THIS DOCUMENT HAS A COLORED BACKGROUND • MICROPRINTING • LINEMARK™ PATENTED PAPER

AC#6174820

STATE OF FLORIDA
DEPARTMENT OF BUSINESS AND PROFESSIONAL REGULATION
CONSTRUCTION INDUSTRY LICENSING BOARD

SEQ#L120626

DATE	BATCH NUMBER	LICENSE NBR
06/26/2012	118194674	CGC060385

The GENERAL CONTRACTOR
Named below IS CERTIFIED
Under the provisions of Chapter
Expiration date: AUG 31, 2014

FOULADI, MAJID
AMERICAN PERSIAN ENGINEERS & CONSTR
4436 OLD WINTER GARDEN RD
ORLANDO FL 32811

RICK SCOTT

KEN LAWSON
SECRETARY

Earl K. Wood, Tax Collector — Local Business Tax Receipt — Orange County, Fl

This local business tax receipt is in addition to and not in lieu of any other tax required by law or municipal ordinance. Businesses are subject to regulation of zoning, health and lawful authorities. This receipt is valid from October 1 through September 30 of receipt year. **Delinquent penalty is added October 1.**

ORIGINAL 2011 **EXPIRES 9/30/2012** 1801-0534485

1801 GENERAL CONTRACTOR $30.00 5 EMPLOYEES: 5000 BUSINESS OFFICE $30.00 5 EMPLOYEES

TOTAL TAX	$60.00
PREVIOUSLY PAID	$60.00
TOTAL DUE	$0.00

FOVLADI H MASID

AMERICAN PERSIAN ENGINEERS &
CONSTRUCTION INC
4436 OLD WINTER GARDEN RD
ORLANDO FL 32811-4211

4436 OLD WINTER GARDEN RD
U - ORLANDO, 32811
PAID: $60.00 99-512322 8/8/2011

Earl K. Wood, Tax Collector — Local Business Tax Receipt — Orange County, Fl

This local business tax receipt is in addition to and not in lieu of any other tax required by law or municipal ordinance. Businesses are subject to regulation of zoning, health and lawful authorities. This receipt is valid from October 1 through September 30 of receipt year. **Delinquent penalty is added October 1.**

ORIGINAL 2011 **EXPIRES 9/30/2012** 1801-0534485

1801 GENERAL CONTRACTOR $30.00 5 EMPLOYEES: 5000 BUSINESS OFFICE $30.00 5 EMPLOYEES

TOTAL TAX $60.00
PREVIOUSLY PAID $60.00
TOTAL DUE $0.00

FOVLADI H MASID

AMERICAN PERSIAN ENGINEERS &
CONSTRUCTION INC
4436 OLD WINTER GARDEN RD
ORLANDO FL 32811-4211

4436 OLD WINTER GARDEN RD
U - ORLANDO, 32811
PAID: $60.00 99-512322 8/8/2011

ORANGE COUNTY FLORIDA

This receipt is official when validated by the Tax Collector.

Earl K. Wood, Tax Collector — Local Business Tax Receipt — Orange County, Flori

This local business tax receipt is in addition to and not in lieu of any other tax required by law or municipal ordinance. Businesses are subject to regulation of zoning, health and lawful authorities. This receipt is valid from October 1 through September 30 of receipt year. **Delinquent penalty is added October 1.**

~~ORIGINAL~~ 2012 **EXPIRES 9/30/2013** 1801-0534485

1801 GENERAL CONTRACTOR $30.00 5 EMPLOYEES: 5000 BUSINESS OFFICE $30.00 5 EMPLOYEES:

REVISED Notice

TOTAL TAX	$60.00
HAZARDOUS WASTE	$50.00
PREVIOUSLY PAID	$0.00
TOTAL DUE	$110.00

FOVLADI H MASID

AMERICAN PERSIAN ENGINEERS &
CONSTRUCTION INC
4436 OLD WINTER GARDEN RD
ORLANDO FL 32811-4211

4436 OLD WINTER GARDEN RD
U - ORLANDO, 32811

Form **W-9**
(Rev. October 2007)
Department of the Treasury
Internal Revenue Service

Request for Taxpayer Identification Number and Certification

Give form to the requester. Do not send to the IRS.

Print or type
See Specific Instructions on page 2.

Name (as shown on your income tax return)
American Persian Engineers and Constructors, Inc

Business name, if different from above

Check appropriate box: ☐ Individual/Sole proprietor ☑ Corporation ☐ Partnership
☐ Limited liability company. Enter the tax classification (D=disregarded entity, C=corporation, P=partnership) ▶
☐ Other (see instructions) ▶

☐ Exempt payee

Address (number, street, and apt. or suite no.)
4436 Old Winter Garden Road

Requester's name and address (optional)

City, state, and ZIP code
Orlando, FL 32811

List account number(s) here (optional)

Part I Taxpayer Identification Number (TIN)

Enter your TIN in the appropriate box. The TIN provided must match the name given on Line 1 to avoid backup withholding. For individuals, this is your social security number (SSN). However, for a resident alien, sole proprietor, or disregarded entity, see the Part I instructions on page 3. For other entities, it is your employer identification number (EIN). If you do not have a number, see *How to get a TIN* on page 3.

Note. If the account is in more than one name, see the chart on page 4 for guidelines on whose number to enter.

Social security number

or

Employer identification number
59 3527379

Part II Certification

Under penalties of perjury, I certify that:

1. The number shown on this form is my correct taxpayer identification number (or I am waiting for a number to be issued to me), and
2. I am not subject to backup withholding because: (a) I am exempt from backup withholding, or (b) I have not been notified by the Internal Revenue Service (IRS) that I am subject to backup withholding as a result of a failure to report all interest or dividends, or (c) the IRS has notified me that I am no longer subject to backup withholding, and
3. I am a U.S. citizen or other U.S. person (defined below).

Certification instructions. You must cross out item 2 above if you have been notified by the IRS that you are currently subject to backup withholding because you have failed to report all interest and dividends on your tax return. For real estate transactions, item 2 does not apply. For mortgage interest paid, acquisition or abandonment of secured property, cancellation of debt, contributions to an individual retirement arrangement (IRA), and generally, payments other than interest and dividends, you are not required to sign the Certification, but you must provide your correct TIN. See the instructions on page 4.

Sign Here Signature of U.S. person ▶ Date ▶ March 13, 2013

General Instructions

Section references are to the Internal Revenue Code unless otherwise noted.

Purpose of Form

A person who is required to file an information return with the IRS must obtain your correct taxpayer identification number (TIN) to report, for example, income paid to you, real estate transactions, mortgage interest you paid, acquisition or abandonment of secured property, cancellation of debt, or contributions you made to an IRA.

Use Form W-9 only if you are a U.S. person (including a resident alien), to provide your correct TIN to the person requesting it (the requester) and, when applicable, to:

1. Certify that the TIN you are giving is correct (or you are waiting for a number to be issued),

2. Certify that you are not subject to backup withholding, or

3. Claim exemption from backup withholding if you are a U.S. exempt payee. If applicable, you are also certifying that as a U.S. person, your allocable share of any partnership income from a U.S. trade or business is not subject to the withholding tax on foreign partners' share of effectively connected income.

Note. If a requester gives you a form other than Form W-9 to request your TIN, you must use the requester's form if it is substantially similar to this Form W-9.

Definition of a U.S. person. For federal tax purposes, you are considered a U.S. person if you are:

- An individual who is a U.S. citizen or U.S. resident alien,
- A partnership, corporation, company, or association created or organized in the United States or under the laws of the United States,
- An estate (other than a foreign estate), or
- A domestic trust (as defined in Regulations section 301.7701-7).

Special rules for partnerships. Partnerships that conduct a trade or business in the United States are generally required to pay a withholding tax on any foreign partners' share of income from such business. Further, in certain cases where a Form W-9 has not been received, a partnership is required to presume that a partner is a foreign person, and pay the withholding tax. Therefore, if you are a U.S. person that is a partner in a partnership conducting a trade or business in the United States, provide Form W-9 to the partnership to establish your U.S. status and avoid withholding on your share of partnership income.

The person who gives Form W-9 to the partnership for purposes of establishing its U.S. status and avoiding withholding on its allocable share of net income from the partnership conducting a trade or business in the United States is in the following cases:

- The U.S. owner of a disregarded entity and not the entity,

CLIENTS REFERENCES

ATTACHMENT 1

Owner	Contact Person	Position	Adress	Telephone Number		Email Adress
Orange County	Julie Naditz	Director of Public Works	400 E.South Street, Orlando Florida 32801	407-836-7949		julie.naditz@ocfl.net
City of Orlando	Scott Turner	Project Manager	400 S Orange Avenue, Orlando, FL 32801	407-246-3758		scott.turner@cityoforlando.net
City of Orlando	Frank Consoli	Project Manager	400 S Orange Avenue, Orlando, FL 32801	407-246-2703		frank.consoli@cityoforlando.net
Seminole County	Bill Glennen	Project Manager	1101 East First Street, Sanford, Florida 32771	407-665-5654		bglennen@seminolecountyfl.gov
City of Casselberry	Mark Gisclar	Project Manager	95 Triplet Lake Drive, Casselberry, Fl 32707	407-262-7725	ext 1234	mgisclar@casselberry.org
Osceola County	Paul Fabrizio	Principal Project Manager	1 Courthouse Square. Kissimmee, Fl 34741	407-742-0621		pfab@osceola.org
City of Ocoee	Steve Krug	Project Manager	150 North Lakeshore, Ocoee, FL 34761	407-905-3100	ext 6002	skrug@ci.ocoee.fl.us
City of Winter Garden	Don Cochran	Project Manager	300 West Plant Street Winter Garden, FL 34787	407-656-4111	ext 2263	dcochran@wintergarden-fl.gov
Orange County Convention Center	Jude Gold	Project Manager	400 E.South Street, Orlando Florida 32801	407-685-5812		jude.gold@occc.net
Orange County Public Schools	John Morris	Project Manager	6501 Magic Way, Bldg 200, Orlando, Fl 32809	407-247-9410		John.Moriss@ocps.net
Orange County Facilities Manageme	Kim Lanham	Project Manager	2010 E. Michigan Street, Orlando, FL 32806	407-836-0042		kim.lanham@ocfl.net
Orange County Facilities Manageme	Mark Adams	Project Manager	400 E.South Street, Orlando Florida 32801	407-836-6561		mark.adams@ocfl.net

ATTACHMENT 2

ALL EQUIPMENT LISTED BELOW IS LOCALLY AVAILABLE AT APEC'S PREMISES IN ORLANDO

ALL EQUIPMENT LISTED BELOW IS OWNED BY APEC. OUR EXPERIENCE WITH ALL THE CLASSIFICATIONS OF EQUIPMENT LISTED BELOW BEGUN IN 1998 WHEN THE COMPANY WAS FORMED.

EXCAVATORS

NAME	MODEL NUMBER	EXPERIENCE
Komatsu	A70859	6 Years
John Deere	JD 650 JLGP	3 Years
John Deere	790H-LC	10 Years

LOADERS

NAME	MODEL NUMBER	EXPERIENCE
Komatsu	A45368	10 Years
Caterpillar 950	81J14229	4 Years
Kubota	LA272FL	3 Years

DOZERS

NAME	MODEL NUMBER	EXPERIENCE
Komatsu D31P-20	47905	7 Years

MINI EXCAVATORS

NAME	MODEL NUMBER	EXPERIENCE
Caterpillar Mini Excavator	CAT03025C4AZ06838	7 Years

TRACTORS

NAME	MODEL NUMBER	EXPERIENCE
Kubota Tractor	B7510HST	4 Years
John Deere Backhoe	T0310B032635	8 Years
Broom Tractor	88799	9 Years

ROLLERS

NAME	MODEL NUMBER	EXPERIENCE
Ham Smooth Drum Roller	38916	8 Years
Caterpillar Roller	2006 CB224E 22401565	9 Years

PAVERS

NAME	MODEL NUMBER	EXPERIENCE
Leeboy Paver	1000F 47250	2 Years

TRUCKS

NAME	VIN NUMBER	EXPERIENCE
Mack Dump Truck	1M2B12OC7JA061395	10 Years
International Dump Truck	1HTZPGRR6KH627614	10 Years
Ford Dump Truck	1FDKF37H9MNA58892	10 Years
Mack Truck	1M1AA12Y4WW086168	10 Years
Mack Truck	1M1AA12Y4WW086169	10 Years

SKIDSTEERS		
Bobat Skidteer	517620026	10 Years
Bobcat Skidsteer	19017098	10 Years
Bobcat Skidsteer	512732530	10 Years
Bobcat Hoe Attachment	75000636	3 Years

MISCELLANEOUS		
NAME	MODEL NUMBER	EXPERIENCE
Woods Trailer	GHT52	8 Years
Beam Aligner with Laser	101511	7 Years
Kent Breaker HYD 120	KHB8GII5206	10 Years
Ingersol Rand Compressor 185 CEM	289394UF1221	10 Years
Diesel Generator	2208	10 Years
Trash Pump	25951	5 Years
Compressor	15828	7 Years
Pressure Washer 2500psi	21564	5 Years
Start Engine	2002 Service Pump 4" Diaphragm Start Engine	10 Years
Concrete Floor Grinder MDL EDCO/2-GC	23410	10 Years
Reversible Plaster Compactor MDL/ DYNAPC	32001746	5 Years
Dewalt Honda Generator	Dewalt Honda Generator	6 Years
Generator	GC053425874	5 Years
7500 WAT Electric Start Generator	TG7500RE	10 Years
Compressor	Dual Tank Compressor	10 Years
Pressure Washer	TPW2200	5 Years
Trash Pump	TTP300	10 Years
Target behind saw	327132	6 Years
2000 Motco Diesel Compression	ET11595	10 Years
Snapper Torque	303400744	3 Years
2000 OTC Lab Scope	11565	10 Years
2000 Rinch 2/4 Impact	55572	10 Years
2000 Prolink Plus	90526873	10 Years
Dual Tank Compressor	88851	10 Years
Industrial Trash Pump TPW 2200	88090	10 Years
Individual Pressure Trash Pump	88361	10 Years
Generator TG5500D	4011492	10 Years
2003 3" Trash Pump Wacker PT3A	5395236	10 Years
Generator	87896	10 Years

Due to APEC's 12 years in business, the company established great relationship with Rental Companies, including but not limited Discount Rentals, RSC equipment rental, Thompson Pumps, etc. APEC may rent some equipment from the rental companies based on its necessities.

Attachment 3

CROSS, STEWARD & CO., L.L.C.
CERTIFIED PUBLIC ACCOUNTANTS

WILLIAM H. CROSS, CPA
STEVEN L. STEWARD, CPA

DONALD G. MATTS, CPA
JIM ADKINSON, CPA
JULIE J. RUCHOTZKE, CPA
ANNE BRAND

601 N.FERN CREEK AVE, SUITE 210
ORLANDO, FLORIDA 32803-4839

TEL (407) 894-6771
FAX (407) 898-3137
WWW.MYFLCPAFIRM.COM

INDEPENDENT ACCOUNTANTS' COMPILATION REPORT

To Management
American Persian Engineers and Constructors, Inc.
Orlando, Florida

We have compiled the accompanying balance sheet of American Persian Engineers and Constructors, Inc. as of September 30, 2012, and the related statements of income and retained earnings for the year then ended. We have not audited or reviewed the accompanying financial statements and, accordingly, do not express an opinion or provide any assurance about whether the financial statements are in accordance with accounting principles generally accepted in the United States of America.

Management is responsible for the preparation and fair presentation of the financial statements in accordance with accounting principles generally accepted in the United States of America and for designing, implementing, and maintaining internal control relevant to the preparation and fair presentation of the financial statements.

Our responsibility is to conduct the compilation in accordance with Statements on Standards for Accounting and Review Services issued by the American Institute of Certified Public Accountants. The objective of a compilation is to assist management in presenting financial information in the form of financial statements without undertaking to obtain or provide any assurance that there are no material modifications that should be made to the financial statements. During our compilation, we did become aware of a departure from accounting principles generally accepted in the United States of America that is described in the following paragraph.

Accounting principles generally accepted in the United States of America require that deferred income taxes be recognized for the tax effects of differences between the financial and tax basis of assets and liabilities and for operating losses and tax credits that are available to offset future taxable income. The Company has not recorded deferred taxes in the accompanying financial statements. The effect of this departure on the financial statements has not been determined.

The supplementary information contained in Schedules I and II is presented for purposes of additional analysis and is not a required part of the basic financial statements. The supplementary information has been compiled from information that is the representation of management. We have not audited or reviewed the supplementary information and, accordingly, do not express an opinion or provide any assurance on such supplementary information.

Management has elected to omit substantially all of the disclosures and the statement of cash flows required by accounting principles generally accepted in the United States of America. If the omitted disclosures and statement of cash flows were included in the financial statements, they might influence the user's conclusions about the Company's financial position, results of operations, and cash flows. Accordingly, the financial statements are not designed for those who are not informed about such matters.

Cross, Steward & Co., L.L.C.

January 22, 2013

Attachment 3

AMERICAN PERSIAN ENGINEERS AND CONSTRUCTORS, INC.
BALANCE SHEET
September 30, 2012

ASSETS

CURRENT ASSETS		
Cash	$	363,409
Contract Receivables		1,496,832
Costs and Estimated Earnings in Excess of Billings on Uncompleted Contracts		273,614
Prepaid Expenses		34,343
Loans and Advances Receivable		78,765
TOTAL CURRENT ASSETS		2,246,963
PROPERTY AND EQUIPMENT		
Property and Equipment		1,572,981
Less Accumulated Depreciation		(1,184,338)
NET PROPERTY AND EQUIPMENT		388,643
TOTAL ASSETS	$	2,635,606

See accountants' compilation report.

Attachment 3

AMERICAN PERSIAN ENGINEERS AND CONSTRUCTORS, INC.
BALANCE SHEET (continued)
September 30, 2012

LIABILITIES AND STOCKHOLDER'S EQUITY

CURRENT LIABILITIES		
Accounts Payable	$	266,026
Billings in Excess of Costs and Estimated Earnings on Uncompleted Contracts		151,666
Accrued Expenses		7,247
Notes Payable		722,693
Current Portion of Long-Term Debt		18,314
TOTAL CURRENT LIABILITIES		1,165,946
STOCKHOLDER'S EQUITY		
Capital Stock, $1 par value, 500 shares authorized, issued and outstanding		500
Additional Paid-In Capital		403,643
Retained Earnings		1,065,517
TOTAL STOCKHOLDER'S EQUITY		1,469,660
TOTAL LIABILITIES AND STOCKHOLDER'S EQUITY	$	2,635,606

See accountants' compilation report.

Attachment 3

AMERICAN PERSIAN ENGINEERS AND CONSTRUCTORS, INC.
STATEMENT OF OPERATIONS AND RETAINED EARNINGS
For the Nine Months Ended September 30, 2012

REVENUES	$ 1,566,730
COST OF REVENUES	
Subcontractors	282,076
Job Materials	167,747
Direct Labor	181,201
Other Direct Job Costs	138,567
Equipment Rent	8,856
TOTAL COST OF REVENUES	778,447
GROSS PROFIT	788,283
GENERAL AND ADMINISTRATIVE EXPENSES	966,650
LOSS FROM OPERATIONS	(178,367)
OTHER INCOME (EXPENSE)	
Other Income	399,000
Other Expense	(49)
Interest Expense	(9,962)
TOTAL OTHER INCOME	388,989
NET INCOME	210,622
RETAINED EARNINGS, DECEMBER 31, 2011	1,567,465
CHANGE TO DECEMBER 31, 2011 RETAINED EARNINGS	(712,570)
RETAINED EARNINGS, SEPTEMBER 30, 2012	$ 1,065,517

See accountants' compilation report.

Attachment 3

AMERICAN PERSIAN ENGINEERS AND CONSTRUCTORS, INC.
SCHEDULE OF GENERAL AND ADMINISTRATIVE EXPENSES
For the Nine Months Ended September 30, 2012

Professional Fees	$	263,261
Administrative and Clerical Salaries		221,144
Insurance		183,984
Rent Expense		81,580
Depreciation		64,762
Office Expense		56,753
Telephone and Utilities		38,086
Taxes and Licenses		24,952
Dues and Subscriptions		9,612
Vehicle Expense		7,018
Bond Expense		5,000
Repairs and Maintenance		4,705
Travel and Entertainment		3,862
Training and Education		1,815
Estimating and Bidding		116
TOTAL	$	966,650

See accountants' compilation report.

AMERICAN PERSIAN ENGINEERS AND CONSTRUCTORS, INC.
Schedule I - Schedule of Contracts In Progress
For the Nine Months Ended September 30, 2012

	Job No.	CONTRACT PRICE	TOTAL COSTS TO DATE	ESTIMATED COSTS TO COMPLETE	TOTAL ESTIMATED COSTS	ESTIMATED GROSS PROFIT (LOSS)	GROSS PROFIT PERCENT	% COMPLETE	ESTIMATED EARNINGS (LOSS)	TOTAL BILLINGS TO DATE	COSTS AND EST EARNINGS IN EXCESS OF BILLINGS	BILLINGS IN EXCESS OF COSTS & ESTIMATED EARNINGS
JOBS IN PROCESS AT 9/30/2012												
Jim Macon Building												
Emergency Sanitary Manhole	J-2000	$ 1,850	$ (650)	$ 2,150	$ 1,500	$ 350	18.92%	-43.33%	$ (152)	$ 3,700	$ -	$ 4,502
City of Winter Park												
Fairbanks Avenue	J-1113											
City of Winter Park		638,680	546,946	1,554	548,500	90,180	14.12%	99.72%	89,925	631,805	5,066	-
City of Ormond Beach												
Ormond Beach Repair & Maintenance	J-1099.1	3,902,116	2,758,532	226,123	2,984,655	917,461	23.51%	92.42%	847,952	3,744,636	-	138,152
North US 1 20" Force Phase (Original Contract)	J-1099	1,163,900	1,058,351	-	1,058,351	105,549	9.07%	100.00%	105,549	1,029,550	134,350	-
City of Orlando Rapid Response												
City of Orlando Install Patterned	J-1114	277,417	189,347	653	190,000	87,417	31.51%	99.66%	87,117	277,417	-	954
Dover Shores Neigborhood Center Playgroud Renovation	J-1082.10	187,824	173,613	1,387	175,000	12,824	6.83%	99.21%	12,722	169,311	17,024	-
Dubsdred	J1082.6	218,241	112,900	2,100	115,000	103,241	47.31%	98.17%	101,356	218,241	-	3,984
Orange County												
Dick's Sporting Goods of Alafya	J-1020	8,194	3,085	415	3,500	4,694	57.29%	88.14%	4,137		7,222	-
Orange County												
J-1106 OC Term Contract Pond Repair												
Corrections Erosion Damage	J-1106.15.3	48,180	11,628	1,716	13,344	34,836	72.30%	87.14%	30,356	43,810	-	1,826
Corrections Retention Pond 2 &	J-1106.15.1	56,950	13,588	12	13,600	43,350	76.12%	99.91%	43,312	25,000	31,900	-
Correction Retention Pond Impro- Other	J-1106.15	218,454	61,362	638	62,000	156,454	71.62%	98.97%	154,844	218,454	-	2,248
Osceola County												
Horzion Bus Parking Lot	J-1040	156,604	97,995	8,005	106,000	50,604	32.31%	92.45%	46,782	143,557	1,220	-
Seminole County												
Miscellaneous Job	1111	32,020	32,019	-	32,019	1	100.00%	100.00%	1	-	32,020	-
WO # 20 Kewwanne Trail Interconnect	J-1054.8	53,775	29,167	5,833	35,000	18,775	89.15%	83.33%	15,646	-	44,812	-
		$ 6,964,205	$ 5,087,884	$ 250,586	$ 5,338,469	$ 1,625,736			$ 1,539,548	$ 6,505,481	$ 273,614	$ 151,666

See accountants' compilation report.

Attachment 3

AMERICAN PERSIAN ENGINEERS AND CONSTRUCTORS, INC.
Schedule II - Completed Contracts
For the Nine Months Ended September 30, 2012

	Job No.	CONTRACT PRICE	TOTAL COSTS TO DATE	ESTIMATED COSTS TO COMPLETE	TOTAL ESTIMATED COSTS	GROSS PROFIT PERCENT	% COMPLETE	GROSS PROFIT (LOSS)
JOBS COMPLETED DURING PERIOD:								
Begun in 2012 and Completed in 2012								
Orange County Convention Center								
Broken Irrigation at the West Entrance	J-1122	$ 16,280	$ 174	$ -	$ 174	98.93%	100.00%	$ 16,106
Emergency Roadway Repair	J-1123	32,525	7,109	-	7,109	78.14%	100.00%	25,416
Emergency Sanitary Manhole	J-1124	15,019	1,309	-	1,309	91.28%	100.00%	13,710
City of Ocoee Public Works								
Construction of Sidewalk White & Montegomery	J-1092.12	7,186	9,097	-	9,097	-26.59%	100.00%	(1,911)
Sawmill Blvd	J-1092.10	11,500	6,703	-	6,703	41.71%	100.00%	4,797
Nicole Blvd	J-1092.13	56,500	24,444	-	24,444	56.74%	100.00%	32,056
Orange County								
J-1106 OC Term Contract Pond Repair								
Medical Examier and Gun Range	J-1106.16	49,898	13,302	-	13,302	73.34%	100.00%	36,596
		$ 188,908	$ 62,138	$ -	$ 62,138			$ 126,770

Attachment 3

AMERICAN PERSIAN ENGINEERS AND CONSTRUCTORS, INC.
Schedule II - Completed Contracts
For the Nine Months Ended September 30, 2012

	Job No.	CONTRACT PRICE	TOTAL COSTS TO DATE	ESTIMATED COSTS TO COMPLETE	TOTAL ESTIMATED COSTS	GROSS PROFIT PERCENT	% COMPLETE	GROSS PROFIT (LOSS)
JOBS IN PROCESS AT 12/31/11 AND COMPLETED IN SEPTEMBER 30 2012:								
Orange County Convention Center								
Orange County								
OCCC Parking Lot	J-1121	$ 32,828	$ 10,924	$ -	$ 10,924	66.72%	100.00%	$ 21,904
Underdrain South Building	J-1120	29,890	5,358	-	5,358	82.07%	100.00%	24,532
OCCC Phase V South Bldg	J-1119	31,450	12,749	-	12,749	59.46%	100.00%	18,701
City of Orlando Rapid Response								
City of Orlando								
Weir Gates at Wetland Park	J-1082.4	41,014	35,374	-	35,374	13.75%	100.00%	5,640
City of Orlando								
Seminole County								
Greenwood Lakes RIB Interconnect	J-1054.6	93,929	138,585	-	138,585	-47.54%	100.00%	(44,656)
Lift Station # 45	J1082.8	29,837	28,439	-	28,439	4.69%	100.00%	1,398
Lake Lucerene	J1082.5	621,228	362,598	-	362,598	41.63%	100.00%	258,630
Osceola County								
Citrus Drive Pipe Repair and Replacement	J-1060	96,115	30,038	-	30,038	68.75%	100.00%	66,077
		$ 976,291	# $ 624,065	$ -	# $ 624,065			$ 352,226

Attachment 3

ADDENDUM # 1

CITY OF DELTONA
BID # PW 13-06
March 8, 2013

TIPTON DRIVE IMPROVEMENTS

All contents of this addendum shall be incorporated into the solicitation documents and the ensuing contract with the awarded contractor.

This addendum is to answer questions and clarify issues that have been brought up during the solicitation process.

Questions and inquiries are being accepted up to seven days prior to the bid opening. The last day and time questions and RFI's for this bid will be accepted are Friday, March 8, 2013. Therefore, no further questions or RFI's will be accepted regarding this project.

Addendums may be issued up to 48 hours prior to the bid opening due time.

City of Deltona is not responsible for third party plan rooms or third party plan holders. All documents pertaining to this bid can be downloaded from www.demandstar.com

CLARIFICATIONS:

a. A bid bond is required for this solicitation.

b. The engineer's estimate for this project is $260,000.

c. Bids shall be mailed to or dropped off at 255 Enterprise Road, Deltona, Florida 32725. Bids shall not be accepted at City Hall.

d. A Payment and Performance Bond is required for this project from the awarded Contractor. Payment and Performance Bond is required to be registered with Volusia County prior to a Notice to Proceed being issued. Proof of registration with Volusia County is required.

e. Contract time is: Substantial completion is 120 days. 30 additional days to final completion. Total Project completion is 150 days. Contract time includes permitting and the entire scope of work to complete this project.

f. Liquidated damages will be in effect for this contract ($1,000 per day).

g. The Work shall be performed by a General Contractor Licensed in the State of Florida. Contract shall not be awarded unless proof of valid license(s) is provided.

h. The City of Deltona is seeking Contractors who have proven past, positive experiences in projects of similar and same size of scope of work as the Prime Contractor. Contractors who cannot prove past, positive experiences in projects of similar and same size of scope of work as the Prime Contractor will not be considered for award.

i. References are required with bid submittals. References shall contain descriptions of work that are of similar and same size of scope of work. 8 references are required with submittals. References shall contain the Owners contact information for the projects referenced. References with a Contractor listed as the Owner shall not be accepted.

j. There are two places shown on the plans with potential water main conflicts. The plans mention "size and depths shown are unknown." Please note that at Tradewinds and Cavern Terrace, Sheet C-101, the water main is 4" AC and is 2.50 feet deep. At Sheffield and Elida, Sheet C-102, the water main is 8" AC and is 4.0 feet deep.

k. There is a potential water main conflict at the intersection of Tradewinds and Sheffield, near the inlet identified as SD-12. It is not labeled on the drawings but the Bid Form will establish the unit prices for water main conflicts and the Contractor will be paid for actual installed quantities.

l. If water main deflection is required on an AC water main the existing pipe shall be restrained via a thrust collar installed in accordance with the City of Deltona Standard Details.

m. All pipe material related to this project is proposed as RCP. ADS N12 is a product approved by the City of Deltona as an alternative for pipe material identified as RCP. HDPE is acceptable for material placed in areas that are not under the road.

n. Restoration activities shall restore the swale in accordance with the detail provided in the documents.

o. Any details not shown within the plans or drawings shall follow the City of Deltona standards manual.

p. Should the awarded Contractor encounter sprinkler systems, planted vegetation or older utility lines within the right-of-way. The City of Deltona requires the awarded Contractor to be customer friendly in letting the citizen know ahead of time (1 week minimum) that if there is a sprinkler system or planted vegetation within the right-of-way they have the option to remove the items. Should the citizen not remove the items, the Contractor shall be required to cap any irrigation system and return the sprinkler heads to the citizen.

QUESTIONS:

Question # 1 – Is this a unit price bid or lump sum?

Answer # 1 – There are unit price items and lump sum items. Award of bid will be made to the lowest, responsive and responsible bidder who meets the criteria of this solicitation.

Question # 2 –What permits are involved with this project?

Answer # 1 – The St. Johns WMD permit has been obtained. The project appears to be too small for a Stormwater Pollution Prevention Permit (SWPP). Should the awarded Contractor need to clear some extra areas for storage, it shall be the awarded Contractors responsibility to obtain the SWPP permit. The City of Deltona does not issue right-of -way use permits for its own projects.

Question # 3 – What is the amount for the testing allowance??

Answer # 3 – The testing allowance is listed as $3,000.00.

The bid due date remains Wednesday, March 13, 2013 at 2:00 p.m. All prospective bidders are hereby instructed not to contact the Engineer of Record or any member of the City of Deltona Commission, City Manager, or City of Deltona Staff members other than the noted contact person regarding this Invitation to Bid or their bid proposal at any time during the solicitation or award process. Any such contact shall be cause for rejection of your bid proposal.

All inquiries are to be directed to the Purchasing Agent for the Public Works Division at the City of Deltona. Contact for this solicitation is: Brian Boehs, Purchasing Agent. Email address is bboehs@deltonafl.gov. Phone is 386-878-8955.

ALL OTHER SPECIFICATIONS AND CONDITIONS REMAIN UNCHANGED.

RECEIPT OF THIS ADDENDUM IS HEREBY ACKNOWLEDGED

American Tension Engineers & Constructors, Inc.
NAME OF BUSINESS

BY: _____
SIGNATURE/DATE

Majid Fouladi
NAME & TITLE, TYPED OR PRINTED

4436 Old Winter Garden Rd
MAILING ADDRESS

Orlando, Florida 32811
CITY, STATE, ZIP CODE

BIDDER'S CONTACT AND INFORMATION FORM
(SECTION 00110)

Bidder (Company) Name: BARRACUDA BUILDING CORP.	F. E. I. N. or SS Number: 16-1617641
Mailing Address: 1000 OCOEE APOPKA RD, STE400	Street Address: SAME
City, State, Zip: APOPKA, FL 32703	City, State, Zip: SAME
Type of Entity: *(Circle one)* Corporation Partnership Proprietorship Joint Venture	*I hereby certify that this bid is made without prior understanding, agreement, or connection with any corporation, firm, or person submitting a bid for the same materials, supplies or equipment, and is in all respects fair and without collusion or fraud. I agree to abide by all conditions of this bid and certify that I am authorized to sign this bid for the Bidder.* X James C. Thompson, PRES. Authorized Signature (Manual)
Incorporated in the State of: FLORIDA Year: 2002	Typed or Printed Name: JAMES C. THOMPSON
Telephone Number: (407) 814-8644	Title: PRESIDENT
Fax Number: (407) 814-8044	
Email contact info: barracudabc@embarqmail.com	

SECTION 00300

BID RESPONSE FORM

Proposal of BARRACUDA BUILDING CORP., hereinafter called "Bidder", a CORPORATION doing business as BARRACUDA BLDG. CORP. to the City of Deltona, Florida hereafter called "Owner". The Bidder, in compliance with the Owner's invitation for bids for the construction of:

City of Deltona

ITB #PW-13-06

TIPTON DRIVE IMPROVEMENTS

having examined the plans and specifications with related documents and the site of the proposed work, and being familiar with all of the conditions surrounding the construction of the proposed project including the availability of materials and labor, hereby proposes to furnish all labor, materials, and supplies; and to construct the project in accordance with the Contract Documents, within the time set forth herein, and at the prices stated below. These prices are to cover all expenses incurred in performing the work required under the Contract Documents, of which this proposal is a part.

Bidder accepts all of the terms and conditions of the Advertisement for Bids and General Conditions, Instructions, and Information for Bidders.

Bidder hereby agrees to commence work under contract on or before a date to be specified in a written "Notice to Proceed" of the Owner and to substantially complete the Project within 120 consecutive calendar days and to fully complete the Project within 150 consecutive calendar days thereafter as stipulated in the specifications. Bidder further agrees to pay any liquidated damages, as specified in the Agreement, for each consecutive calendar day thereafter.

Bidder has examined and carefully studied the Bidding Documents and the following addendum receipt of which is hereby acknowledged:

No. 1	Dated: 3/8/13	No. _____	Dated: _____
No. _____	Dated: _____	No. _____	Dated: _____
No. _____	Dated: _____	No. _____	Dated: _____
No. _____	Dated: _____	No. _____	Dated: _____

BASE PROPOSAL: Bidder agrees to perform all of the work described in the specifications and shown on the plans for the sum shown in the schedule below:

Item No.	Description	Qty	Unit	Unit Price	Total Price
General Administrative					
1	Mobilization/Demobilization	1	LS	$3200	$3200
2	General Requirements, Bonds, Permits, etc.	1	LS	$10,700	$10,700
3	Indemnification	1	LS	$ 700	$ 700
4	Testing Allowance (Roadway and Pipe Compaction)	1	LS	$3000	$3000
Stormwater Sitework					
5	Layout and As-Built Survey	1	LS	$3100	$3100
6	Temporary Erosion Protection	1	LS	$1700	$1700
7	Maintenance of Traffic	1	LS	$2800	$2800
8	Clearing and Grubbing	1	LS	$13,500	$13,500
9	Site Grading	1	LS	$5500	$5500
10	Remove and Dispose Existing Drainage Inlets	4	EA	$460	$1840
11	Remove and Dispose Existing Drainage Culverts	225	LF	$10	$2250
12	Remove and Replace Driveway	90	SY	$44	$3960
13	Remove and Replace Pavement	550	SY	$35	$19,250
14	Furnish and Install 14" x 23" Elliptical RCP	55	LF	$42	$2310
15	Furnish and Install 18" Reinforced Concrete Pipe	55	LF	$34	$1870
16	Furnish and Install 36" Reinforced Concrete Pipe (<10-ft depth)	775	LF	$57	$44,175
17	Furnish and Install 36" Reinforced Concrete Pipe (>10-ft depth)	275	LF	$73	$20,075
18	Type "C" Inlet	3	EA	$1550	$4650
19	Type "D" Inlet - 6-ft Alternate B	2	EA	$3600	$7200
20	Type "J" Manhole - 6-ft Alternate A (<10-ft depth)	2	EA	$3000	$6000
21	Type "J" Manhole - 6-ft Alternate A (>10-ft depth)	2	EA	$3240	$6480
22	Modified Type "H" Outfall Structure	1	EA	$3050	$3050
23	Furnish and Install 36" Headwall	1	EA	$3900	$3900
24	Furnish and Install Rip Rap	110	SY	$127	$13,970
Water Main Conflict					
25	45º Bend (FLG.)	4	EA	$175	$700
26	Furnish and Install PVC C900 Pipe (restrained joint)	35	LF	$35	$1225
27	Remove and Replace Pavement Related to Water Main Conflict	40	SY	$37	$1480
				TOTAL BASE BID	$188,585

TOTAL BASE BID IN WORDS:

ONE HUNDRED EIGHTY-EIGHT THOUSAND FIVE HUNDRED EIGHTY-FIVE **DOLLARS AND** 00**/100 CENTS**

The unit prices provided above shall include all labor, materials, bailing, shoring, removal, overhead, profit, insurance, etc., to cover the finished work of the several kinds required. Any changes to the Work after issuance of the Notice of Award shall be processed in accordance with Articles 10, 11, and 12 of the General Conditions (Section 00700) and Article 5 of the Agreement with the Owner.

Bidder understands that the Owner reserves the right to reject any or all bids and to waive any informalities in the bidding.

A bid security, attached in the sum of five (5) percent of the Total Bid Amount, is to become the property of the Owner in the event contract and bond are not executed within thirty (30) days of the Owner issuing a Notice of Award, as liquidated damages for the delay and additional expense to the Owner caused thereby.

Respectfully submitted:

By: BARRACUDA BLDG. CORP.
(Business Name)

(SEAL - if bid is by corporation)

1000 OCOEE APOPKA RD., STE400
(Business Address)

APOPKA, FL 32703
(Business City, State, Zip Code)

James C. Thompson, Pres.
(Signature)

JAMES C. THOMPSON
(Printed Name)

PRESIDENT
(Title)

SCHEDULE OF BASE BID MANUFACTURERS/SUPPLIERS
(SECTION 300A)

The Contract Documents are based upon the equipment or products available from the manufacturers/suppliers denoted as "A", "B", etc. However, the Bidder must indicate in his Bid which Base Bid manufacturer/supplier he intends to use for each item of equipment listed by circling one (1) of the listed manufacturers/suppliers. Should the Bidder fail to circle a named supplier, he hereby agrees to provide the item listed as "A". After receipt of bids, the Bidder may not substitute for any manufacturer or supplier circled. Listed manufacturers/suppliers identified as deductive alternates will be considered as a deductive alternate as presented in the Deductive Alternate Section of the Bid Form.

If the Bidder desires to propose one (1) or more substitution or "or equal" manufacturers/suppliers, he may write in the name of such substitution or "or equal" in the spaces provided on the pages following the lists, but he must, nevertheless, also circle one of the listed manufacturers/suppliers. All substitutions or "or equal" items must be identified at the time of Bid (see paragraph 6.7 of the General Conditions as amended by the Supplementary Conditions). Substitutions or "or equal" items will **not** be considered when determining the Apparent Lowest Bidder. Substitutions or "or equal" items will **not** be evaluated or considered until after the "Effective Date" of the Agreement. The Bidder shall base his Bid on providing one of the listed manufacturers/suppliers and shall assume for bidding purposes that all substitutions or "or equal" items will not be accepted.

If the proposed substitution or "or equal" manufacturer/supplier is determined "not equivalent" by the Engineer, the Bidder must use the circled manufacturer/supplier. If the Bidder fails to indicate which listed manufacturer/supplier he intends to use or if a substitution or an "or equal" is rejected, he must use the manufacturer/supplier listed as "A". Also, if the Bidder circles more than one listed manufacturer/supplier, he must use the first manufacturer/supplier circled (unless a substitution or "or equal" is approved).

Each proposed substitution or "or equal" will be evaluated in accordance with Paragraph 6.7 of the General Conditions as amended by the Supplementary Conditions following the Effective Date of the Agreement.

In addition to the reimbursement required under Paragraph 6.7 of the General Conditions, the Contractor shall also reimburse the Owner for any engineering costs directly attributable to the change in manufacturers/suppliers, caused by the acceptance of proposed substitution or "or equal" items, such as; additional field trips for the Engineer, additional redesign costs, and additional review costs, etc. Other costs directly attributable to the change in manufacturers/suppliers caused by the acceptance of proposed substitution or "or equal" items such as increased electrical requirements, larger building, modifications to structures, additional pumps, piping or tankage, etc., shall be borne by others and not by the Owner. Bidder further agrees that the use of substitute equipment offered will not affect the completion date.

The Owner may request, and the Bidder shall supply, complete information on proposed substitution or "or equal" items prior to the Notice of Award.

Category I - **SCHEDULE OF BASE BID MANUFACTURERS / SUPPLIERS (SECTION 300A)**

Item No.	Equipment Item or Material	Specification Section No.	Manufacturer/Supplier
1.			
2.			
3.			
4.			
5.			
6.			
7.			

SUBSTITUTION LIST OF MANUFACTURERS / SUPPLIERS
(SECTION 00300B)

Bidder proposes the following substitutions and "or equal" items of alternate manufacturers/suppliers for the equipment of material categories so identified:

	Equipment Item Material	Drawing No.	Spec. Section	Substitute/"or equal" Manufacturer/Supplier (List One Only)	Proposed Price Deduct
1.					
2.					
3.					
4.					
5.					
6.					
7.					
9.					
10.					

SUBSTITUTIONS AND "OR EQUAL"

The above signed as Bidder agrees that substitutions or "or equal" items will not be considered until after the "Effective Date of the Agreement" and will be evaluated in accordance with Paragraphs 6.7, 6.7.1 and 6.7.2, of the General Conditions as amended by the Supplementary Conditions. If Bidder intends to propose substitutions or "or equal" items after the "Effective Date of the Agreement", it is agreed that these items will be listed on the Substitution List included with the Bid (form provided herein). Only the proposed substitutions or "or equal" items listed on the Substitution List will be evaluated by the Engineer in accordance with the General Conditions.

QUESTIONNAIRE FORM
(SECTION 00301)

DATE: 3/13/2013

PROJECT IDENTIFICATION **City of Deltona – Public Works Division**
TIPTON DRIVE IMPROVEMENTS

NAME OF BIDDER: BARRACUDA BUILDING CORPORATION

BUSINESS ADDRESS: 1000 OCOEE APOPKA RD, STE 400, APOPKA, FL 32703

TELEPHONE NO: 407-814-8644

CONTRACTOR'S FLORIDA LICENSE NO: CGC1504612

The signed bidder warrants the truth and accuracy of all statements and answers herein contained. Include additional sheets if necessary.

1. How many years has your organization been in business as a General Contractor? 10

2. Have you ever failed to complete work awarded to you? If so, where and why? NO

3. Name three (3) municipalities or government entities for which you have performed similar projects as this one and to which you refer?
   CITY OF DELTONA, FL
   TOWN OF WINDERMERE, FL
   CITY OF KISSIMMEE, FL

4. Have you personally inspected the site of the proposed Work? Describe any anticipate problems with the site and your proposed solutions.
   YES, NO PROBLEMS

5. Will you Subcontract any part of this Work? If so, describe which portion(s).
   YES, PRECON VIDEO, SURVEYING, TESTING, SILT FENCING, CONCRETE FINISHING, ASPHALT PAVING, SODDING

6. What equipment do you own that is available for the Work? (attach additional sheets if necessary)

SEE ATTACHED LISTS

7. What equipment will you purchase for the Work?

NONE

8. What equipment will you rent for the Work?

TOILETS, MOT, GRADER,

9. The following is given as a summary of the Financial Statement of the undersigned: (List Assets and Liabilities and use insert sheet if necessary.)

SEE ATTACHED STATEMENTS

10. State the true and exact, correct, and complete name under which you do business.

Bidder is: BARRACUDA BUILDING CORPORATION

BBC EQUIPMENT LIST (updated 03/13/2013)

(Equipment)	(Year)	(Vin or ID #)
Ford F150XL	2007	1FTRX12W57NA87496
Sterling LT7501	2000	2FZNRJBB5YAA61933
Ford F650	2007	3FRNF65F87V397997
Ford F750 (Manitex Boom Truck)	2007	3FRXF75N77V507377
Ford F750 (Water Truck)	2004	3FRPF75214V619903
Ford F150	2007	1FTRF12237KC87777
Freightliner 20' Flat Bed	2000	1FV6HLBA1YHG10472
Sterling Dump	2004	2FZHAZCVX4AM50893
247 CAT Skid Steer Track Loader	2004	ID#CML01186
CS323C Soil Drum Compactor	2006	ID#DAR00195
302 CR Mini Excavator	2008	ID#NAD03360
305CCR Excavator	2007	Serial #HWJ01612
Victory Cargo Box Trailer	2006	5LBBE121861010947
930G Wheel Loader	2004	ID#TWR01700
311 CU Excavator (CAT)	2007	ID#CKE01859
All Pro Trailer	2007	1Z9TA252X7J213263
Imperial Trailer	2007	1Z9BU12207J213953
All Pro Trailer	2007	5NHUEH6207U213685
Ford F250	2011	1FT7X2BT1BEB02989
Ford F150	2011	1FTFW1EF2BFB21320
CAT 930 Front End Loader	2006	
TOPCON PIPE TRANSIT		

Barracuda Building Corporation
Profit & Loss
January through February 2013

	Jan - Feb 13
Ordinary Income/Expense	
Income	
4060 · Construction	360,705.34
Total Income	360,705.34
Cost of Goods Sold	
5060 · Asphalt Paving Subcontractor	94,338.03
5065 · Auto insurance	603.56
5135 · Cell phone bill	1,512.22
5170 · Concrete Contractor	16,434.75
5185 · Concrete Supplier	8,711.11
5233 · Dump fees	4,788.50
5244 · Employee Child Support	2,629.95
5248 · Equipment Rental	-837.71
5271 · Fuel	13,925.70
5340 · Job Materials	49,323.31
5350 · Landscaping	5,155.15
5355 · Lightning Protection Subcontrac	1,975.00
5373 · Maintenance	1,652.05
5380 · Millwork Subcontractor	3,750.00
5440 · Plans Fees	65.00
5478 · Repairs and Maintenance	654.78
5524 · Small Tools and Machinery	5,124.81
5545 · Surveying	2,180.00
5570 · Temporary labor	1,232.83
5580 · Temporary toilet	450.19
5595 · Testing	852.50
5608 · Tolls	1,880.10
5625 · Truck & Cell Phone Allowance	2,260.00
Total COGS	218,661.83
Gross Profit	142,043.51
Expense	
6030 · Advertising	25.00
6180 · Insurance	
6184 · Life Insurance	496.58
6185 · Liability Insurance	5,683.47
6180 · Insurance - Other	3,138.92
Total 6180 · Insurance	9,318.97

Barracuda Building Corporation
Profit & Loss
January through February 2013

	Jan - Feb 13
6210 · Finance Charges	33.94
6237 · Medical Expense	113.56
6240 · Miscellaneous	86.00
6246 · Notice To Owner	65.40
6250 · Office Repairs and Maintenance	301.32
6255 · Petty Cash Receipts	808.51
6258 · Postage and Delivery	197.88
6259 · Promotional item	167.87
6290 · Rents	3,981.34
6340 · Telephone	443.64
6350 · Travel & Ent	
6370 · Meals	251.59
Total 6350 · Travel & Ent	251.59
6390 · Utilities	
6393 · Gas and Electric	78.48
6394 · Water	34.19
6390 · Utilities - Other	1,460.28
Total 6390 · Utilities	1,572.95
6550 · Office Supplies	925.51
6560 · Payroll Expenses	86,091.18
Total Expense	104,384.66
Net Ordinary Income	37,658.85
Other Income/Expense	
Other Expense	
8000 · Interest Expense	124.26
Total Other Expense	124.26
Net Other Income	-124.26
Net Income	**37,534.59**

Barracuda Building Corporation
Balance Sheet
As of February 28, 2013

	Feb 28, 13
ASSETS	
Current Assets	
Checking/Savings	
1000 · Barracuda Checking	9,134.86
1020 · Trustco Savings Account	75,633.37
Total Checking/Savings	84,768.23
Accounts Receivable	
1200 · Accounts Receivable	349,953.81
Total Accounts Receivable	349,953.81
Total Current Assets	434,722.04
Fixed Assets	
1400 · Software	5,897.20
1410 · Barracuda Office Equipment	24,730.95
1420 · Furniture and Fixtures	2,350.00
1430 · Trucks and Trailers	520,849.38
1440 · Construction Equipment	380,671.28
1480 · Leasehold Improvements	13,344.79
1490 · Accumulated Depreciation	-593,660.11
Total Fixed Assets	354,183.49
TOTAL ASSETS	**788,905.53**
LIABILITIES & EQUITY	
Liabilities	
Current Liabilities	
Accounts Payable	
2000 · Accounts Payable	225,424.75
Total Accounts Payable	225,424.75
Other Current Liabilities	
2001 · A/P Long-Term Debt Offset	-6,103.16
2010 · Barracuda Credit Line	29,394.93
2100 · Payroll Liabilities	9,432.34
2390 · Current Portion, Long-Term Debt	76,844.00
Total Other Current Liabilities	109,568.11
Total Current Liabilities	334,992.86

Barracuda Building Corporation
Balance Sheet
As of February 28, 2013

	Feb 28, 13
Long Term Liabilities	
2741 · N/P 2011 Ford F-250 1FT7X2BT	23,253.44
2742 · N/P 2011 Ford F150 1FTFW1EF	31,614.60
2746 · N/P F-150 (US Bank)1FTRX12W7N87	4,437.53
2748 · N/P F-750(Bank Amer)3FRPF75214V	447.96
2772 · N/P 2000 Sterling DAIMLER2FZNR	8,368.76
2778 · N/P 302.5C Excavator	16,221.13
2779 · N/P 10 Ton All Pro Trailer	1,846.52
2781 · N/P Freightliner 20' (Daimler)	-6,146.25
2783 · N/P Caterpillar Refinanced	114,237.32
2790 · Less Current Portion	-76,844.00
Total Long Term Liabilities	117,437.01
Total Liabilities	452,429.87
Equity	
3100 · Capital Stock	100.00
3200 · Additional Paid-In Capital	167,683.28
3700 · Retained Earnings	356,684.58
3800 · Distributions	-206,955.23
3810 · Medical Distributions	-5,971.56
3820 · Health Insurance Distributions	-12,600.00
Net Income	37,534.59
Total Equity	336,475.66
TOTAL LIABILITIES & EQUITY	788,905.53

SUB-CONTRACTORS AND AFFILIATES FORM
(SECTION 00301A)

The following are a list of Sub Contractors or Affiliates that will be utilized in this project. Use additional sheets if necessary.

1. **Firm Name:** LAYOUT SERVICES
   Trade: SURVEYING & AS BUILTS
   Firm Owner: JIM ZIMMERMAN
   Firm Address: 3380 S. PARK AVE., STE 7, TITUSVILLE, FL 32780
   Firm Phone Number: 321-759-2779

2. **Firm Name:** TERRACON CONSULTANTS, INC.
   Trade: TESTING
   Firm Owner: TERRACON CONSULTANTS, INC.
   Firm Address: PO BOX 843358, KANSAS, MO 64184-3358
   Firm Phone Number: 407-740-6110

3. **Firm Name:** FLORIDA SILT FENCE d/b/a WBE ENVIRONMENTAL
   Trade: SILT FENCE
   Firm Owner: HOLLY STROUT
   Firm Address: PO BOX 628004, ORLANDO, FL 32862-8004
   Firm Phone Number: 386-753-0575

4. **Firm Name:** ACME BARRICADES
   Trade: MOT MATERIALS
   Firm Owner: CHRISTIAN CUMMINGS, MANAGING PARTNER
   Firm Address: 9800 NORMANDY BLVD., JACKSONVILLE, FL 32221-2036
   Firm Phone Number: 904-781-1950

5. **Firm Name:** FORMASTERS CONCRETE SPECIALISTS
   Trade: CONCRETE FINISHING
   Firm Owner: VOLUSIA GENERAL CONTRACTORS
   Firm Address: PO BOX 1026, LAKE HELEN, FL 32744
   Firm Phone Number: 386-228-3003

SUB-CONTRACTORS AND AFFILIATES FORM
(SECTION 00301A)

The following are a list of Sub Contractors or Affiliates that will be utilized in this project. Use additional sheets if necessary.

1. **Firm Name:** SUN RAY PAVING
   Trade: ASPHALT PAVING, PRIME & SAND
   Firm Owner: SHERMAN KIRKLAND & ALAN MORRISON
   Firm Address: PO BOX 621358, OVIEDO, FL 32762-1358
   Firm Phone Number: 407-359-8338

2. **Firm Name:** ACCURATE PAVERS & LANDSCAPING
   Trade: SODDING
   Firm Owner: RODNEY JOHNSON
   Firm Address: 5316 EDGEWATER DR., ORLANDO, FL 32810
   Firm Phone Number: 407-948-0476

3. **Firm Name:** _____
   Trade: _____
   Firm Owner: _____
   Firm Address: _____
   Firm Phone Number: _____

4. **Firm Name:** _____
   Trade: _____
   Firm Owner: _____
   Firm Address: _____
   Firm Phone Number: _____

5. **Firm Name:** _____
   Trade: _____
   Firm Owner: _____
   Firm Address: _____
   Firm Phone Number: _____

REFERENCES FORM
(SECTION 00301B)

The City of Deltona is seeking Contractors who have proven past, positive experiences in projects of similar and same size of scope of work. These references are required with your submittals. References shall contain the Owners contact information for the projects referenced. References with another Contractor listed as the Owner shall not be accepted. Contractors not having past, positive experiences in projects of similar and same size of scope of work, as the Prime Contractor, will not be considered. References which are located in foreign countries are not acceptable.

1. **Project Name:** RENEE TERRACE STORM DRAINAGE
   Project Value: $790,000
   Project Description: DEMO, ASPHALT PAVING, CONCRETE CURBS, STORM DRAINAGE, WATER PIPING, SODDING, GRADING
   Project Owner: CITY OF KISSIMMEE
   Owner contact information: JOHN TULAK, 407-518-2170
   Project Location: CITY OF KISSIMMEE 101 N. CHURCH ST., STE 301, KISSIMMEE, FL 34741
   Project Start and End Dates: 2010

2. **Project Name:** 1ST & 12TH STORM DRAINAGE IMPROVEMENT
   Project Value: $240,000
   Project Description: STORM DRAINAGE, SODDING, DEMO, GRADING
   Project Owner: TOWN OF WINDERMERE
   Owner contact information: DOROTHY BURKHALTER, 407-876-2563
   Project Location: TOWN OF WINDERMERE 614 MAIN ST., WINDERMERE, FL 34786
   Project Start and End Dates: 2010

3. **Project Name:** MITCHELL HAMMOCK RD STORM DRAINAGE IMPROVEMENTS
   Project Value: $184,000
   Project Description: DEMO, GRADING, STORM DRAIN PIPING, CONCRETE CURB, BASE, ASPHALT PAVING, SODDING, PAVEMENT MARKINGS
   Project Owner: CITY OF OVIEDO
   Owner contact information: SOPHIA LIATSOS, 407-971-5641
   Project Location: CITY OF OVIEDO 400 ALEXANDRIA BLVD, OVIEDO, FL 32765
   Project Start and End Dates: 2011

4. **Project Name:** BLACKWOOD AVE STREETSCAPE
   Project Value: $145,000
   Project Description: DEMO, BRICK PAVERS, CONCRETE SIDEWALKS & CURBS, CLEARING, LANDSCAPING, STORM DRAINAGE, CONCRETE FOOTINGS
   Project Owner: CITY OF OCOEE
   Owner contact information: AL BUTLER, 407-905-3100 EXT 1543
   Project Location: CITY OF OCOEE 150 N. LAKESHORE DR., OCOEE, FL 34761
   Project Start and End Dates: 2011

REFERENCES FORM
(SECTION 00301B CONTINUED)

5. **Project Name:** MASTER AGREEMENT
Project Value: $500,000
Project Description: GENERAL SITE WORK
Project Owner: CITY OF BELLE ISLE, FL
Owner contact information: STEVE GILLIS, 407-851-7730
Project Location: CITY OF BELLE ISLE 1600 NELA AVE, BELLE ISLE, FL 32809
Project Start and End Dates: 2007 - 2012

6. **Project Name:** WALKER ELEMENTARY SCHOOL SIDEWALKS
Project Value: $138,000
Project Description: SIDEWALKS, GRADING, ASPHALT PAVING, STORM DRAIN PIPING, SODDING, DEMO.
Project Owner: SEMINOLE COUNTY
Owner contact information: JACQUI PERRY
Project Location: SEMINOLE COUNTY 1301 E. SECOND ST., SANFORD, FL 32771
Project Start and End Dates: 2012

7. **Project Name:** SOUTH SUMMIT AVE, PAVING PHASE 3
Project Value: $112,000
Project Description: DEMO, CLEARING, ROAD BASE & ASPHALT PAVING, CONCRETE CURBS, GRADING, SODDING
Project Owner: CITY OF LAKE HELEN
Owner contact information: DON FINDELL, 386-228-2121
Project Location: CITY OF LAKE HELEN 327 S. LAKEVIEW DR., LAKE HELEN, FL 32774
Project Start and End Dates: 2012

8. **Project Name:** CLOVERLEAF STORMWATER IMPROVEMENTS
Project Value: $302,000
Project Description: DEMO, STORMWATER PIPING, GRADING, CONCRETE SIDEWALKS, PAVING & CURBS, ASPHALT PAVING, SODDING
Project Owner: CITY OF DELTONA
Owner contact information: BRIAN BOEHS, 386-878-8655
Project Location: CITY OF DELTONA 255 ENTERPRISE RD., DELTONA, FL 32725
Project Start and End Dates: 2012

CORPORATE RESOLUTION FORM
(SECTION 00420)

I, JAMES C. THIMPSON, Secretary of BARRACUDA BLDG. CORP., a corporation organized and existing under the laws of the State of FLORIDA, hereby certify that at a meeting of the Board of Directors of the Corporation duly called and held on MARCH 12, 2012 at which a quorum was present and acting throughout, the following resolutions were adopted and are now in full force effect:

RESOLVED that the following individuals of this corporation are authorized to execute on behalf of this corporation A Bid and Agreement to CITY OF DELTONA, FL for the construction of TIPTON DR. IMPROVEMENTS.

I further certify that the names of the officers of this corporation and any other persons authorized to act under this resolution and their official signatures are as follows:

NAME	OFFICE	OFFICIAL SIGNATURE
JAMES C THOMPSON	PRESIDENT	James C Thompson

IN WITNESS THEREOF, I have hereunto subscribed my name as Secretary and affixed the seal of the corporation this 13TH day of MARCH, 2012

HOLD HARMLESS AND INDEMNITY AGREEMENT
(SECTION 00430)

JAMES C. THOMPSON, agrees through the signing of this document by an authorized party or agent that it shall defend, indemnify and hold harmless the City of Deltona, and its agents, employees, and public officials from and against all suits, losses, claims, demands, judgments of every name and description arising out of or incidental to the performance of this contract or work performed thereunder, whether or not due to or caused by the negligence of the City of Deltona, its agents, employees, and public officials excluding only the sole negligence of the City of Deltona, its agents, employees, and Public Officials.

This provision shall also pertain to any claims brought against the City of Deltona, its agents, employees, and public officials by an employee of the named Contractor, any Sub-contractor, or anyone directly or indirectly employed by any of them.

The Contractor's obligation to indemnify the City of Deltona, its agents, employees and public officials under this provision shall be limited to $1,000,000 per occurrence which the parties agree bears a reasonable commercial relationship to the contract.

The Contractor agrees to accept, and acknowledges as adequate remunerations, the consideration of $10, which is part of the agreed bid price, the promises contained herein, and other good and valuable consideration, the receipt of which is hereby acknowledged, for agreement to enter into this Hold Harmless and Indemnity Agreement.

James C Thompson
CONTRACTOR

3/13/2013
DATE

DRUG-FREE WORKPLACE FORM
(SECTION 00440)

The undersigned Bidder in accordance with Florida Statute 287.087, hereby certifies that BARRACUDA BLDG. CORP. does:
(*Name of Business*)

1. Publish a statement notifying employees that the unlawful manufacture, distribution, dispensing, possession, or use of a controlled substance is prohibited in the workplace and specifying the actions that will be taken against employees for violations of such prohibition.

2. Inform employees about the dangers of drug abuse in the workplace, the business's policy of maintaining a drug-free workplace, any available drug counseling, rehabilitation, and employee assistance programs, and the penalties that may be imposed upon employees for drug abuse violations.

3. Give each employee engaged in providing the commodities or contractual services that are proposed a copy of the statement specified in subsection (1).

4. In the statement specified in subsection (1), notify the employees that, as a condition of working on the commodities or contractual services that are under bid, the employee will abide by the terms of the statement and will notify the employer of any conviction of, or plea of guilty or nolo contendere to, any violation of Chapter 893 or of any controlled substance law of the United States or any state, for a violation occurring in the workplace no later than five (5) days after such conviction.

5. Impose a sanction on, or require the satisfactory participation in a drug abuse assistance or rehabilitation program if such is available in the employee's community, by any employee who is so convicted.

6. Make a good faith effort to continue to maintain a drug-free workplace through implementation of this section.

As the person authorized to sign the statement, I certify that this firm complies fully with the above requirements.

X James G. Thompson, PRES.
Bidder's Signature

3/13/2013
Date

PROPOSER'S CERTIFICATION FORM
(SECTION 00460)

I have carefully examined the Request for Proposal, Instructions to Proposers, General and/or Special Conditions, Vendor's Notes, Specifications, proposed agreement and any other documents accompanying or made a part of this Request for Proposal.

I hereby propose to furnish the goods or services specified in the Request for Proposal at the prices and rates quoted in my Proposal. I agree that my Proposal will remain firm for a period of up to one hundred twenty (120) days in order to allow the City adequate time to evaluate the Proposal.

I agree to abide by all conditions of the Proposal and understand that a background investigation may be conducted by the City of Deltona prior to award.

I certify that all information contained in this Proposal is truthful to the best of my knowledge and belief. I further certify that I am a duly authorized to submit this Proposal on behalf of the vendor / contractor as its act and deed and that the vendor / contractor is ready, willing and able to perform if awarded the contract.

I further certify, under oath, that this Proposal is made without prior understanding, agreement, connection, discussion, or collusion with any other person, firm or corporation submitting a Proposal for the same product or service; no officer, employee or agent of the City of Deltona Government or of any other Proposer interested in said Proposal; and that the undersigned executed this Proposer's Certification with full knowledge and understanding of the matters therein contained and was duly authorized to do so.

Name of Business

By: James C. Thompson, PRES.
Signature

JAMES C. THOMPSON
Name & Title, Typed or Printed

1000 OCOEE APOPKA RD, STE 400
Mailing Address

APOPKA, FL 32703
City, State, Zip Code

(407) 814-8644
Telephone Number

Sworn to and subscribed before me

This 13 day of

MARCH, 2013

Paula M. Lucia
Signature of Notary

Notary Public, State of FLORIDA

Personally known
-OR-
Produced Identification _____

Notary Public State of Florida
Paula M Lucia
My Commission DD994462
Expires 05/23/2014

SWORN STATEMENT UNDER SECTION 287.133(3)(A), FLORIDA STATUTES, ON PUBLIC ENTITY CRIMES (SECTION 00470)

THIS FORM MUST BE SIGNED IN THE PRESENCE OF A NOTARY PUBLIC OR OTHER OFFICER AUTHORIZED TO ADMINISTER OATHS.

This sworn statement is submitted to the City of Deltona by JAMES C. THOMPSON
(Individual's name and title)

For BARRACUDA BUILDING CORPORATION
(Name of entity submitting sworn statement)

Whose business address is 1000 OCOEE APOPKA RD, STE 400
APOPKA, FL 32703

And (if applicable) its Federal Employer Identification Number (FEIN) is 16-1617641
(if the entity has no FEIN, include the Social Security Number of the individual signing this sworn statement)

1. I understand that a "public entity crime" as defined in Section 287.133(1)(g), Florida Statutes, means a violation of any State or Federal law by a person with respect to and directly related to the transaction of business with any public entity or with an agency or political subdivision of any other state or with the United States, including, but not limited to, any bid or contract for goods or services to be provided to any public entity or an agency or political subdivision of any other state or a of the United States and involving antitrust, fraud, theft, bribery, collusion, racketeering, conspiracy, or material misrepresentation.

11. I understand that "convicted" or "conviction" as defined in Paragraph 287.133(1)(b), Florida Statutes, means a finding of guilt or a conviction of a public entity crimes, with or without an adjudication of guilt, in any Federal or State trial court of record relating to charges brought by indictment or information after July 1, 1989, as a result of a jury verdict, non-jury trial, or entry of a plea of guilty or nolo contendere.

12. I understand that an "affiliate' as defined in Section 287.133(1)(a), Florida Statutes, means:

    A predecessor or successor of a person convicted of a public entity crime: or an entity under the control of any natural person who is active in the management of the entity and how has been convicted of a public entity crime. The term "affiliate" includes those officers, directors, executives, partners, shareholders, employees, members, and agents who are active in the management of an affiliate. The ownership by one (1) person of shares constituting a controlling interest in another person, or a pooling of equipment or income among persons when not for fair market value under an arm's length agreement, shall be a prima facie case that one person controls another person. A person who knowingly enters into a joint venture with a person who has been convicted of a public entity crime in Florida during the preceding thirty-six (36) months shall be considered an affiliate.

13. I understand that a "person" as defined in Section 287.133(1)(e), Florida Statutes, means any natural person or entity organized under the laws of any state or of the United States with the legal power to enter into a binding contract and which bids or applies to bid on contracts for the provision of goods or services let by a public entity, or which otherwise transacts or applies to transact business with a public entity. The term "person" includes those officers, directors, executives, partners, shareholders employees, members, and agents who are active in management of an entity.

14. Based on information and belief, the statement which I have marked below is true in relation to the entity submitting this sworn statement. (You must indicate which statement applies.)

(SECTION 00470 Continued)

✓ Neither the entity submitting this sworn statement, nor any officers, directors, executives, partners, shareholders, employees, members, or agent who is active in management of the entity, nor the affiliate of the entity has been charged with and convicted of a public entity crime subsequent to July 1, 1989.

_____ The entity submitting this sworn statement, or one or more of the officers, directors, executives, partners, shareholders, employees, members or agent who are active in management of the entity, or an affiliate of the entity, has been charged with and convicted of a public entity crime subsequent to July 1, 1989.

_____ The entity submitting this sworn statement, or one or more of the officers, directors, executives, partners, shareholders, employees, members or agents who are active in management of the entity, or an affiliate of the entity, has been charged with and convicted of a public entity crime subsequent to July 1, 1989. However, there has been a subsequent proceeding before an Administrative Law Jury of the State of Florida, Division of Administrative Hearings and the Final Order entered by the Administrative Law Jury determined that it was not in the public interest to place the entity submitting this sworn statement on the convicted vendor list. (You must attach a copy of the final order).

I UNDERSTAND THAT THE SUBMISSION OF THIS FORM TO THE CITY OF DELTONA IS FOR THE CITY ONLY AND, THAT THIS FORM IS VALID THROUGH DECEMBER 31, OF THE CALENDAR YEAR IN WHICH IT IS FILED. I ALSO UNDERSTAND THAT I AM REQUIRED TO INFORM THE CITY PRIOR TO ENTERING IN TO A CONTRACT IN EXCESS OF THE THRESHOLD AMOUNT PROVIDED IN SECTION 287.017, FLORIDA STATUTES, FOR CATEGORY TWO OF ANY CHANGE IN THE INFORMATION CONTAINED IN THIS FORM.

James C. Thompson, PRES.
SIGNATURE

3/13/2013
DATE

State of FLORIDA
County of ORANGE

Personally appeared before me, the undersigned authority, JAMES C. THOMPSON (name of individual signing) who, after first being sworn by me, affixed his/her signature in the space provided above on the 13 day of MARCH, 20 13.

Paula M. Lucia
NOTARY PUBLIC

My commission expires: 05/23/2014

Notary Public State of Florida
Paula M Lucia
My Commission DD994462
Expires 05/23/2014

NON COLLUSION AFFIDAVIT FORM
(SECTION 00480)

STATE OF FLORIDA

COUNTY OF VOLUSIA

JAMES C. THOMPSON, being first duly sworn deposes and says that:

i. He/She is the PRESIDENT, of BARRACUDA BLDG CORP, the Bidder that has submitted the attached Bid;

ii. He/She is fully informed respecting the preparation and contents of the attached Bid and of all pertinent circumstances respecting such Bid;

iii. Such Bid is genuine and is not a collusive or sham Bid;

iv. Neither the said Bidder nor any of its officers, partners, owners, agents, representatives, employees, or parties in interest, including this affidavit, have in any way, colluded, conspired, connived or agreed, directly or indirectly, with any other Bidder, firm or person to submit a collusive or sham Bid in connection with the Contract for which the attached Bid has been submitted; or to refrain from bidding in connection with such Contract; or have in any manner, directly or indirectly, sought by agreement or collusion,, or communication, or conference with any Bidder, firm, or person to fix the price or prices in the attached Bid or of any other Bidder, or to fix any overhead, profit, or cost elements of the Bid price or the Bid price of any other Bidder, or to secure through any collusion, conspiracy, connivance, or unlawful agreement any advantage against (Recipient), or any person interested in the proposed Contract;

v. The price or prices quoted in the attached Bid are fair and proper and are not tainted by any collusion, conspiracy, connivance, or unlawful agreement on the part of the Bidder or any other of its agents, representatives, owners, employees or parties in interest, including this affidavit.

By James C. Thompson, PRES.

Sworn and subscribed to before me this 13 day of March, 2013, in the State of FLORIDA, County of ORANGE.

Paula M. Lucia Notary Public

My Commission expires: 05/23/2014

NOTARY PUBLIC STATE OF FLORIDA
Notary Public State of Florida
Paula M Lucia
My Commission DD994462
Expires 05/23/2014

TRENCH SAFETY AFFIDAVIT FORM
(SECTION 00490)

(FAILURE TO COMPLETE THIS FORM MAY RESULT IN THE BID BEING DECLARED NON-RESPONSIVE)

BARRACUDA BUILDING CORP. (NAME OF CONTRACTOR) hereby provides written assurance that compliance with applicable Trench Safety Standards identified in the Occupational Safety & Health Administration's Excavation Safety Standards (OSHA) 29 C.F.R.S. 1926.650 Subpart P will be adhered to during trench excavation in accordance with Florida Statutes 553.60 through 533.64 inclusive (1990) "Trench Safety Act".

The specific methods of compliance with applicable Trench Safety Standards, and the associated cost of compliance (costs included in the Bid Price), are as follows (attach additional sheets if necessary):

Item and Safety Measure	Cost
DOUBLE TRENCH BOX	$ 1100.00
BANKING/SLOPING	$ 3700.00
	$
	$
	$
	$
	$
TOTAL	$ 4800.00

By the signature of its undersigned authorized representatives, the Bidder hereby assures the CITY OF DELTONA that any such excavation performed by the Bidder will be performed in compliance with all applicable trench safety standards.

By James G. Thompson, PRES.

Sworn and subscribed to before me this 13 day of MARCH, 2013, in the State of FLORIDA, County of ORANGE.

Paula M. Lucia Notary Public

My Commission expires: 05/23/2014

Notary Public State of Florida
Paula M Lucia
My Commission DD994462
Expires 05/23/2014

Form **W-9**
(Rev. January 2011)
Department of the Treasury
Internal Revenue Service

Request for Taxpayer Identification Number and Certification

Give Form to the requester. Do not send to the IRS.

Print or type
See Specific Instructions on page 2.

Name (as shown on your income tax return)
JAMES C. THOMPSON

Business name/disregarded entity name, if different from above
BARRACUDA BUILDING CORPORATION

Check appropriate box for federal tax classification (required): ☐ Individual/sole proprietor ☒ C Corporation ☐ S Corporation ☐ Partnership ☐ Trust/estate

☐ Limited liability company. Enter the tax classification (C=C corporation, S=S corporation, P=partnership) ▶

☐ Other (see instructions) ▶

☐ Exempt payee

Address (number, street, and apt. or suite no.)
1000 OCOEE APOPKA RD., STE 400

Requester's name and address (optional)

City, state, and ZIP code
APOPKA, FL 32703

List account number(s) here (optional)

Part I Taxpayer Identification Number (TIN)

Enter your TIN in the appropriate box. The TIN provided must match the name given on the "Name" line to avoid backup withholding. For individuals, this is your social security number (SSN). However, for a resident alien, sole proprietor, or disregarded entity, see the Part I instructions on page 3. For other entities, it is your employer identification number (EIN). If you do not have a number, see *How to get a TIN* on page 3.

Note. If the account is in more than one name, see the chart on page 4 for guidelines on whose number to enter.

Social security number
☐☐☐ - ☐☐ - ☐☐☐☐

Employer identification number
16 - 1617641

Part II Certification

Under penalties of perjury, I certify that:

1. The number shown on this form is my correct taxpayer identification number (or I am waiting for a number to be issued to me), and
2. I am not subject to backup withholding because: (a) I am exempt from backup withholding, or (b) I have not been notified by the Internal Revenue Service (IRS) that I am subject to backup withholding as a result of a failure to report all interest or dividends, or (c) the IRS has notified me that I am no longer subject to backup withholding, and
3. I am a U.S. citizen or other U.S. person (defined below).

Certification instructions. You must cross out item 2 above if you have been notified by the IRS that you are currently subject to backup withholding because you have failed to report all interest and dividends on your tax return. For real estate transactions, item 2 does not apply. For mortgage interest paid, acquisition or abandonment of secured property, cancellation of debt, contributions to an individual retirement arrangement (IRA), and generally, payments other than interest and dividends, you are not required to sign the certification, but you must provide your correct TIN. See the instructions on page 4.

Sign Here Signature of U.S. person ▶ James C. Thompson Date ▶ 3/12/12

General Instructions

Section references are to the Internal Revenue Code unless otherwise noted.

Purpose of Form

A person who is required to file an information return with the IRS must obtain your correct taxpayer identification number (TIN) to report, for example, income paid to you, real estate transactions, mortgage interest you paid, acquisition or abandonment of secured property, cancellation of debt, or contributions you made to an IRA.

Use Form W-9 only if you are a U.S. person (including a resident alien), to provide your correct TIN to the person requesting it (the requester) and, when applicable, to:

1. Certify that the TIN you are giving is correct (or you are waiting for a number to be issued),
2. Certify that you are not subject to backup withholding, or
3. Claim exemption from backup withholding if you are a U.S. exempt payee. If applicable, you are also certifying that as a U.S. person, your allocable share of any partnership income from a U.S. trade or business is not subject to the withholding tax on foreign partners' share of effectively connected income.

Note. If a requester gives you a form other than Form W-9 to request your TIN, you must use the requester's form if it is substantially similar to this Form W-9.

Definition of a U.S. person. For federal tax purposes, you are considered a U.S. person if you are:

- An individual who is a U.S. citizen or U.S. resident alien,
- A partnership, corporation, company, or association created or organized in the United States or under the laws of the United States,
- An estate (other than a foreign estate), or
- A domestic trust (as defined in Regulations section 301.7701-7).

Special rules for partnerships. Partnerships that conduct a trade or business in the United States are generally required to pay a withholding tax on any foreign partners' share of income from such business. Further, in certain cases where a Form W-9 has not been received, a partnership is required to presume that a partner is a foreign person, and pay the withholding tax. Therefore, if you are a U.S. person that is a partner in a partnership conducting a trade or business in the United States, provide Form W-9 to the partnership to establish your U.S. status and avoid withholding on your share of partnership income.

ADDENDUM # 1

CITY OF DELTONA
BID # PW 13-06
March 8, 2013

TIPTON DRIVE IMPROVEMENTS

All contents of this addendum shall be incorporated into the solicitation documents and the ensuing contract with the awarded contractor.

This addendum is to answer questions and clarify issues that have been brought up during the solicitation process.

Questions and inquiries are being accepted up to seven days prior to the bid opening. The last day and time questions and RFI's for this bid will be accepted are Friday, March 8, 2013. Therefore, no further questions or RFI's will be accepted regarding this project.

Addendums may be issued up to 48 hours prior to the bid opening due time.

City of Deltona is not responsible for third party plan rooms or third party plan holders. All documents pertaining to this bid can be downloaded from www.demandstar.com

CLARIFICATIONS:

a. A bid bond is required for this solicitation.

b. The engineer's estimate for this project is $260,000.

c. Bids shall be mailed to or dropped off at 255 Enterprise Road, Deltona, Florida 32725. Bids shall not be accepted at City Hall.

d. A Payment and Performance Bond is required for this project from the awarded Contractor. Payment and Performance Bond is required to be registered with Volusia County prior to a Notice to Proceed being issued. Proof of registration with Volusia County is required.

e. Contract time is: Substantial completion is 120 days. 30 additional days to final completion. Total Project completion is 150 days. Contract time includes permitting and the entire scope of work to complete this project.

f. Liquidated damages will be in effect for this contract ($1,000 per day).

g. The Work shall be performed by a General Contractor Licensed in the State of Florida. Contract shall not be awarded unless proof of valid license(s) is provided.

h. The City of Deltona is seeking Contractors who have proven past, positive experiences in projects of similar and same size of scope of work as the Prime Contractor. Contractors who cannot prove past, positive experiences in projects of similar and same size of scope of work as the Prime Contractor will not be considered for award.

i. References are required with bid submittals. References shall contain descriptions of work that are of similar and same size of scope of work. 8 references are required with submittals. References shall contain the Owners contact information for the projects referenced. References with a Contractor listed as the Owner shall not be accepted.

j. There are two places shown on the plans with potential water main conflicts. The plans mention "size and depths shown are unknown." Please note that at Tradewinds and Cavern Terrace, Sheet C-101, the water main is 4" AC and is 2.50 feet deep. At Sheffield and Elida, Sheet C-102, the water main is 8" AC and is 4.0 feet deep.

k. There is a potential water main conflict at the intersection of Tradewinds and Sheffield, near the inlet identified as SD-12. It is not labeled on the drawings but the Bid Form will establish the unit prices for water main conflicts and the Contractor will be paid for actual installed quantities.

l. If water main deflection is required on an AC water main the existing pipe shall be restrained via a thrust collar installed in accordance with the City of Deltona Standard Details.

m. All pipe material related to this project is proposed as RCP. ADS N12 is a product approved by the City of Deltona as an alternative for pipe material identified as RCP. HDPE is acceptable for material placed in areas that are not under the road.

n. Restoration activities shall restore the swale in accordance with the detail provided in the documents.

o. Any details not shown within the plans or drawings shall follow the City of Deltona standards manual.

p. Should the awarded Contractor encounter sprinkler systems, planted vegetation or older utility lines within the right-of-way. The City of Deltona requires the awarded Contractor to be customer friendly in letting the citizen know ahead of time (1 week minimum) that if there is a sprinkler system or planted vegetation within the right-of-way they have the option to remove the items. Should the citizen not remove the items, the Contractor shall be required to cap any irrigation system and return the sprinkler heads to the citizen.

QUESTIONS:

Question # 1 – Is this a unit price bid or lump sum?

Answer # 1 – There are unit price items and lump sum items. Award of bid will be made to the lowest, responsive and responsible bidder who meets the criteria of this solicitation.

Question # 2 –What permits are involved with this project?

Answer # 1 – The St. Johns WMD permit has been obtained. The project appears to be too small for a Stormwater Pollution Prevention Permit (SWPP). Should the awarded Contractor need to clear some extra areas for storage, it shall be the awarded Contractors responsibility to obtain the SWPP permit. The City of Deltona does not issue right-of -way use permits for its own projects.

Question # 3 – What is the amount for the testing allowance??

Answer # 3 – The testing allowance is listed as $3,000.00.

The bid due date remains Wednesday, March 13, 2013 at 2:00 p.m. All prospective bidders are hereby instructed not to contact the Engineer of Record or any member of the City of Deltona Commission, City Manager, or City of Deltona Staff members other than the noted contact person regarding this Invitation to Bid or their bid proposal at any time during the solicitation or award process. Any such contact shall be cause for rejection of your bid proposal.

All inquiries are to be directed to the Purchasing Agent for the Public Works Division at the City of Deltona. Contact for this solicitation is: Brian Boehs, Purchasing Agent. Email address is bboehs@deltonafl.gov. Phone is 386-878-8955.

ALL OTHER SPECIFICATIONS AND CONDITIONS REMAIN UNCHANGED.

RECEIPT OF THIS ADDENDUM IS HEREBY ACKNOWLEDGED

BARRACUDA BUILDING CORP.
NAME OF BUSINESS

BY: James C. Thompson
SIGNATURE/DATE

JAMES C. THOMPSON - PRESIDENT
NAME & TITLE, TYPED OR PRINTED

1000 OCOEE APOPKA RD, STE400
MAILING ADDRESS

APOPKA, FL 32703
CITY, STATE, ZIP CODE

BID BOND FORM
(SECTION 00410)

KNOWN ALL MEN BY THESE PRESENTS, that we, the undersigned, Barracuda Building Corporation as Principal, and Berkley Regional Insurance Company as Surety, are hereby held and firmly bound unto the City of Deltona, Florida as Owner in the penal sum of, (five percent 5%) of the Contract Bid Five Percent of the Amount Bid (5%) for the payment of which, well and truly to be made, we hereby and severally bind ourselves, successors and assigns to pay Owner upon default of Bidder the penal sum set forth on the face of this Bond. Signed, this 13th day of March, 2013.

The condition of the above obligation is such that whereas the Principal has submitted to the City of Deltona, Florida a certain bid, attached hereto and hereby made a part hereof, to enter into a contract in writing, for the **TIPTON DRIVE IMPROVEMENTS.**

NOW THEREFORE,

1. Default of Bidder shall occur upon the failure of Bidder to deliver within the time required by the Bidding Documents the executed Agreement required by the Bidding Documents and any performance and payment bonds required by the Bidding Documents and Contract Documents.

2. This obligation shall be null and void if:

   2.1 Owner accepts Bidder's bid and Bidder delivers within the time required by the Bidding Documents (or an extension thereof agreed to in writing by Owner) the executed Agreement required by the Bidding Documents and any performance and payment bonds required by the Bidding Documents and Contract Documents, or

   2.2 All bids are rejected by Owner, or

   2.3 Owner fails to issue a notice of award to Bidder within the time specified in the Bidding Documents (or any extension thereof agreed to in writing by Bidder and, if applicable, consented to by Surety when required by paragraph 5 hereof).

3. Payment under this Bond will be due and Payable upon default of Bidder and within thirty (30) calendar days after receipt of Bidder and surety of written notice of default from Owner which notice will be given with reasonable promptness, identifying this Bond and the Project and including a statement of the amount due.

4. Surety waives notice of any and all defenses based on or arising out of any time extension to issue notice of award agreed to in writing by Owner and Bidder, providing that the time for issuing notice of award including extensions shall not in the aggregate exceed one hundred twenty (120) days from Bid Due without Surety's written consent.

5. No suite or action shall be commenced under this Bond prior to thirty (30) calendar days after the notice of default required in paragraph 3 above is received by Bidder and Surety, and in no case later than one year after Bid Due Date.

6. Any suite or action under this Bond shall be commenced only in a court of competent jurisdiction located in the state in which the Project is located.

7. Notice required hereunder shall be in writing and sent to Bidder and Surety at their respective addresses shown on the face of this Bond. Such notices may be sent by personal delivery, commercial courier or by United States Registered or Certified Mail, return receipt requested, postage pre-paid, and shall be deemed to be effective upon receipt by the part concerned.

8. Surety shall cause to be attached to this Bond a current and effective Power of Attorney evidencing the authority of the officer, agent or representative who executed this Bond on behalf of Surety to execute, seal and deliver such Bond and bind the Surety thereby.

9. This bond is intended to conform to all applicable statutory requirements. Any applicable requirement of any applicable statute that has been omitted from this Bond shall be deemed to be included herein as if set forth at length. If any provision of the Bond conflicts with any applicable provision of any applicable statute, then the provision of said statute shall govern and the remainder of the Bond that is not in conflict therewith shall continue in full force and effect.

10. The term "bid' as used herein includes a bid, offer or proposal as applicable.

IN WITNESS WHEREOF, the Principal and the Surety have hereunto set their hands and seals, and such of them as are corporations have caused their corporate seals to be hereto affixed and these presents to be signed by their proper officers, the day and year first set forth above.

Principal (Print Full Name):

Barracuda Building Corporation

By: James G Thompson (LS)

Title: Pres.

Attest: Paulette M. Lucia
Signature and Title
office manager

Surety (Print Full Name):

Berkley Regional Insurance Company (Seal)
Surety's Name and Corporate Seal

By: _____
Signature (attach power of attorney)

Title: James S. Penny, Attorney-In-Fact & Florida Licensed Resident Agent

Attest: Kathy Clawson
Signature and Title
Kathy Clawson, Witness

March 13th, 2013
(DATE)

Inquiries: (407) 834-0022

IMPORTANT – Surety companies executing bonds must appear on the Treasury Department's most current list (Circular 570 as amended) and be authorized to transact business in the State of Florida.

POWER OF ATTORNEY
BERKLEY REGIONAL INSURANCE COMPANY
WILMINGTON, DELAWARE

NOTICE: The warning found elsewhere in this Power of Attorney affects the validity thereof. Please review carefully.

KNOW ALL MEN BY THESE PRESENTS, that BERKLEY REGIONAL INSURANCE COMPANY (the "Company"), a corporation duly organized and existing under the laws of the State of Delaware, having its principal office in Urbandale, Iowa, has made, constituted and appointed, and does by these presents make, constitute and appoint: ***J. W. Guignard, Bryce R. Guignard, April L. Lively, Margie L. Morris, Jennifer L. McCarta, Allyson Foss or James S. Penny of Guignard Company of Longwood, FL*** its true and lawful Attorney-in-Fact, to sign its name as surety only as delineated below and to execute, seal, acknowledge and deliver any and all bonds and undertakings, with the exception of Financial Guaranty Insurance, providing that no single obligation shall exceed **Fifty Million and 00/100 U.S. Dollars (U.S.$50,000,000.00),** to the same extent as if such bonds had been duly executed and acknowledged by the regularly elected officers of the Company at its principal office in their own proper persons.

This Power of Attorney shall be construed and enforced in accordance with, and governed by, the laws of the State of Delaware, without giving effect to the principles of conflicts of laws thereof. This Power of Attorney is granted pursuant to the following resolutions which were duly and validly adopted at a meeting of the Board of Directors of the Company held on August 21, 2000:

"**RESOLVED**, that the proper officers of the Company are hereby authorized to execute powers of attorney authorizing and qualifying the attorney-in-fact named therein to execute bonds, undertakings, recognizances, or other suretyship obligations on behalf of the Company, and to affix the corporate seal of the Company to powers of attorney executed pursuant hereto; and further

RESOLVED, that such power of attorney limits the acts of those named therein to the bonds, undertakings, recognizances, or other suretyship obligations specifically named therein, and they have no authority to bind the Company except in the manner and to the extent therein stated; and further

RESOLVED, that such power of attorney revokes all previous powers issued on behalf of the attorney-in-fact named; and further

RESOLVED, that the signature of any authorized officer and the seal of the Company may be affixed by facsimile to any power of attorney or certification thereof authorizing the execution and delivery of any bond, undertaking, recognizance, or other suretyship obligation of the Company; and such signature and seal when so used shall have the same force and effect as though manually affixed. The Company may continue to use for the purposes herein stated the facsimile signature of any person or persons who shall have been such officer or officers of the Company, notwithstanding the fact that they may have ceased to be such at the time when such instruments shall be issued."

IN WITNESS WHEREOF, the Company has caused these presents to be signed and attested by its appropriate officers and its corporate seal hereunto affixed this 26 day of July, 2012.

Attest: Berkley Regional Insurance Company

(Seal) By _____ By _____

Ira S. Lederman
Senior Vice President & Secretary

Jeffrey M. Hafter
Senior Vice President

WARNING: THIS POWER INVALID IF NOT PRINTED ON BLUE "BERKLEY" SECURITY PAPER.

STATE OF CONNECTICUT)
) ss:
COUNTY OF FAIRFIELD)

Sworn to before me, a Notary Public in the State of Connecticut, this 26 day of July, 2012, by Jeffrey M. Hafter and Ira S. Lederman who are sworn to me to be the Senior Vice President, and the Senior Vice President and Secretary, respectively, of Berkley Regional Insurance Company.

SANDRA C. MILANO
NOTARY PUBLIC, STATE OF CONNECTICUT
MY COMMISSION EXPIRES MAY 31, 2017

Notary Public, State of Connecticut

CERTIFICATE

I, the undersigned, Assistant Secretary of BERKLEY REGIONAL INSURANCE COMPANY, DO HEREBY CERTIFY that the foregoing is a true, correct and complete copy of the original Power of Attorney; that said Power of Attorney has not been revoked or rescinded and that the authority of the Attorney-in-Fact set forth therein, who executed the bond or undertaking to which this Power of Attorney is attached, is in full force and effect as of this date.

Given under my hand and seal of the Company, this 13th day of March, 2013.

(Seal)

Andrew M. Tuma

WARNING – Any unauthorized reproduction or alteration of this document is prohibited. This power of attorney is void unless seals are readable and the certification seal at the bottom is embossed. The background imprint, warning and confirmation (on reverse) must be in blue ink.

DETACH HERE

THIS DOCUMENT HAS A COLORED BACKGROUND • MICROPRINTING • LINEMARK™ PATENTED PAPER

AC#6283626

STATE OF FLORIDA

DEPARTMENT OF BUSINESS AND PROFESSIONAL REGULATION
CONSTRUCTION INDUSTRY LICENSING BOARD

SEQ# L12082002173

DATE	BATCH NUMBER	LICENSE NBR
08/20/2012	128046515	CGC1504612

The GENERAL CONTRACTOR
Named below IS CERTIFIED
Under the provisions of Chapter 489 FS.
Expiration date: AUG 31, 2014

THOMPSON, JAMES CLIFTON
BARRACUDA BUILDING CORPORATION
1000 OCOEE-APOPKA ROAD
SUITE 400
APOPKA FL 32703

RICK SCOTT
GOVERNOR

KEN LAWSON
SECRETARY

DISPLAY AS REQUIRED BY LAW

BID BOND FORM
(SECTION 00410)

KNOWN ALL MEN BY THESE PRESENTS, that we, the undersigned, Built-Rite Construction of Central Florida, Inc. as Principal, and Merchants Bonding Company as Surety, are hereby held and firmly bound unto the City of Deltona, Florida as Owner in the penal sum of, (five percent 5%) of the Contract Bid Five Percent of Amount Bid (5%) for the payment of which, well and truly to be made, we hereby and severally bind ourselves, successors and assigns to pay Owner upon default of Bidder the penal sum set forth on the face of this Bond. Signed, this 13th day of March, 2013.

The condition of the above obligation is such that whereas the Principal has submitted to the City of Deltona, Florida a certain bid, attached hereto and hereby made a part hereof, to enter into a contract in writing, for the **TIPTON DRIVE IMPROVEMENTS.**

NOW THEREFORE,

1. Default of Bidder shall occur upon the failure of Bidder to deliver within the time required by the Bidding Documents the executed Agreement required by the Bidding Documents and any performance and payment bonds required by the Bidding Documents and Contract Documents.

2. This obligation shall be null and void if:

   2.1 Owner accepts Bidder's bid and Bidder delivers within the time required by the Bidding Documents (or an extension thereof agreed to in writing by Owner) the executed Agreement required by the Bidding Documents and any performance and payment bonds required by the Bidding Documents and Contract Documents, or

   2.2 All bids are rejected by Owner, or

   2.3 Owner fails to issue a notice of award to Bidder within the time specified in the Bidding Documents (or any extension thereof agreed to in writing by Bidder and, if applicable, consented to by Surety when required by paragraph 5 hereof).

3. Payment under this Bond will be due and Payable upon default of Bidder and within thirty (30) calendar days after receipt of Bidder and surety of written notice of default from Owner which notice will be given with reasonable promptness, identifying this Bond and the Project and including a statement of the amount due.

4. Surety waives notice of any and all defenses based on or arising out of any time extension to issue notice of award agreed to in writing by Owner and Bidder, providing that the time for issuing notice of award including extensions shall not in the aggregate exceed one hundred twenty (120) days from Bid Due without Surety's written consent.

5. No suite or action shall be commenced under this Bond prior to thirty (30) calendar days after the notice of default required in paragraph 3 above is received by Bidder and Surety, and in no case later than one year after Bid Due Date.

6. Any suite or action under this Bond shall be commenced only in a court of competent jurisdiction located in the state in which the Project is located.

MERCHANTS
BONDING COMPANY™

POWER OF ATTORNEY

Know All Persons By These Presents, that MERCHANTS BONDING COMPANY (MUTUAL) and MERCHANTS NATIONAL BONDING, INC., both being corporations duly organized under the laws of the State of Iowa (herein collectively called the "Companies"), and that the Companies do hereby make, constitute and appoint, individually,

April L. Lively, Jack W. Guignard, Paul J. Ciambriello, Bryce R. Guignard,
Jennifer L. McCarta, Margie L. Morris, Allyson Foss

of Longwood and State of Florida their true and lawful Attorney-in-Fact, with full power and authority hereby conferred in their name, place and stead, to sign, execute, acknowledge and deliver in their behalf as surety any and all bonds, undertakings, recognizances or other written obligations in the nature thereof, subject to the limitation that any such instrument shall not exceed the amount of:

SEVEN MILLION ($7,000,000.00) DOLLARS

and to bind the Companies thereby as fully and to the same extent as if such bond or undertaking was signed by the duly authorized officers of the Companies, and all the acts of said Attorney-in-Fact, pursuant to the authority herein given, are hereby ratified and confirmed.

This Power-of-Attorney is made and executed pursuant to and by authority of the following By-Laws adopted by the Board of Directors of the Merchants Bonding Company (Mutual) on April 23, 2011 and adopted by the Board of Directors of Merchants National Bonding, Inc., on October 24, 2011.

> "The President, Secretary, Treasurer, or any Assistant Treasurer or any Assistant Secretary or any Vice President shall have power and authority to appoint Attorneys-in-Fact, and to authorize them to execute on behalf of the Company, and attach the seal of the Company thereto, bonds and undertakings, recognizances, contracts of indemnity and other writings obligatory in the nature thereof.
>
> The signature of any authorized officer and the seal of the Company may be affixed by facsimile or electronic transmission to any Power of Attorney or Certification thereof authorizing the execution and delivery of any bond, undertaking, recognizance, or other suretyship obligations of the Company, and such signature and seal when so used shall have the same force and effect as though manually fixed."

In Witness Whereof, the Companies have caused this instrument to be signed and sealed this 3rd day of December , 2012 .

MERCHANTS NATIONAL BONDING, INC. INCORPORATED -o- 2003

MERCHANTS BONDING COMPANY (MUTUAL) INCORPORATED -o- 1933

MERCHANTS BONDING COMPANY (MUTUAL)
MERCHANTS NATIONAL BONDING, INC.

By Larry Taylor
President

STATE OF IOWA
COUNTY OF POLK ss.

On this 3rd day of December , 2012 , before me appeared Larry Taylor, to me personally known, who being by me duly sworn did say that he is President of the MERCHANTS BONDING COMPANY (MUTUAL) and MERCHANTS NATIONAL BONDING, INC.; and that the seals affixed to the foregoing instrument is the Corporate Seals of the Companies; and that the said instrument was signed and sealed in behalf of the Companies by authority of their respective Boards of Directors.

In Testimony Whereof, I have hereunto set my hand and affixed my Official Seal at the City of Des Moines, Iowa, the day and year first above written.

NOTARIAL SEAL IOWA
MARANDA GREENWALT
Commission Number 770312
My Commission Expires
October 28, 2014

Maranda Greenwalt
Notary Public, Polk County, Iowa

STATE OF IOWA
COUNTY OF POLK ss.

I, William Warner, Jr., Secretary of the MERCHANTS BONDING COMPANY (MUTUAL) and MERCHANTS NATIONAL BONDING, INC., do hereby certify that the above and foregoing is a true and correct copy of the POWER-OF-ATTORNEY executed by said Companies, which is still in full force and effect and has not been amended or revoked.

In Witness Whereof, I have hereunto set my hand and affixed the seal of the Companies on this 13th day of March , 2013 .

MERCHANTS NATIONAL BONDING, INC. INCORPORATED -o- 2003

MERCHANTS BONDING COMPANY (MUTUAL) INCORPORATED -o- 1933

William Warner Jr.
Secretary

POA 0014 (11/11)

ADDENDUM # 1

CITY OF DELTONA
BID # PW 13-06
March 8, 2013

TIPTON DRIVE IMPROVEMENTS

All contents of this addendum shall be incorporated into the solicitation documents and the ensuing contract with the awarded contractor.

This addendum is to answer questions and clarify issues that have been brought up during the solicitation process.

Questions and inquiries are being accepted up to seven days prior to the bid opening. The last day and time questions and RFI's for this bid will be accepted are Friday, March 8, 2013. Therefore, no further questions or RFI's will be accepted regarding this project.

Addendums may be issued up to 48 hours prior to the bid opening due time.

City of Deltona is not responsible for third party plan rooms or third party plan holders. All documents pertaining to this bid can be downloaded from www.demandstar.com

CLARIFICATIONS:

a. A bid bond is required for this solicitation.

b. The engineer's estimate for this project is $260,000.

c. Bids shall be mailed to or dropped off at 255 Enterprise Road, Deltona, Florida 32725. Bids shall not be accepted at City Hall.

d. A Payment and Performance Bond is required for this project from the awarded Contractor. Payment and Performance Bond is required to be registered with Volusia County prior to a Notice to Proceed being issued. Proof of registration with Volusia County is required.

e. Contract time is: Substantial completion is 120 days. 30 additional days to final completion. Total Project completion is 150 days. Contract time includes permitting and the entire scope of work to complete this project.

f. Liquidated damages will be in effect for this contract ($1,000 per day).

g. The Work shall be performed by a General Contractor Licensed in the State of Florida. Contract shall not be awarded unless proof of valid license(s) is provided.

h. The City of Deltona is seeking Contractors who have proven past, positive experiences in projects of similar and same size of scope of work as the Prime Contractor. Contractors who cannot prove past, positive experiences in projects of similar and same size of scope of work as the Prime Contractor will not be considered for award.

i. References are required with bid submittals. References shall contain descriptions of work that are of similar and same size of scope of work. 8 references are required with submittals. References shall contain the Owners contact information for the projects referenced. References with a Contractor listed as the Owner shall not be accepted.

j. There are two places shown on the plans with potential water main conflicts. The plans mention "size and depths shown are unknown." Please note that at Tradewinds and Cavern Terrace, Sheet C-101, the water main is 4" AC and is 2.50 feet deep. At Sheffield and Elida, Sheet C-102, the water main is 8" AC and is 4.0 feet deep.

k. There is a potential water main conflict at the intersection of Tradewinds and Sheffield, near the inlet identified as SD-12. It is not labeled on the drawings but the Bid Form will establish the unit prices for water main conflicts and the Contractor will be paid for actual installed quantities.

l. If water main deflection is required on an AC water main the existing pipe shall be restrained via a thrust collar installed in accordance with the City of Deltona Standard Details.

m. All pipe material related to this project is proposed as RCP. ADS N12 is a product approved by the City of Deltona as an alternative for pipe material identified as RCP. HDPE is acceptable for material placed in areas that are not under the road.

n. Restoration activities shall restore the swale in accordance with the detail provided in the documents.

o. Any details not shown within the plans or drawings shall follow the City of Deltona standards manual.

p. Should the awarded Contractor encounter sprinkler systems, planted vegetation or older utility lines within the right-of-way. The City of Deltona requires the awarded Contractor to be customer friendly in letting the citizen know ahead of time (1 week minimum) that if there is a sprinkler system or planted vegetation within the right-of-way they have the option to remove the items. Should the citizen not remove the items, the Contractor shall be required to cap any irrigation system and return the sprinkler heads to the citizen.

QUESTIONS:

Question # 1 – Is this a unit price bid or lump sum?

Answer # 1 – There are unit price items and lump sum items. Award of bid will be made to the lowest, responsive and responsible bidder who meets the criteria of this solicitation.

Question # 2 –What permits are involved with this project?

Answer # 1 – The St. Johns WMD permit has been obtained. The project appears to be too small for a Stormwater Pollution Prevention Permit (SWPP). Should the awarded Contractor need to clear some extra areas for storage, it shall be the awarded Contractors responsibility to obtain the SWPP permit. The City of Deltona does not issue right-of -way use permits for its own projects.

Question # 3 – What is the amount for the testing allowance??

Answer # 3 – The testing allowance is listed as $3,000.00.

The bid due date remains Wednesday, March 13, 2013 at 2:00 p.m. All prospective bidders are hereby instructed not to contact the Engineer of Record or any member of the City of Deltona Commission, City Manager, or City of Deltona Staff members other than the noted contact person regarding this Invitation to Bid or their bid proposal at any time during the solicitation or award process. Any such contact shall be cause for rejection of your bid proposal.

All inquiries are to be directed to the Purchasing Agent for the Public Works Division at the City of Deltona. Contact for this solicitation is: Brian Boehs, Purchasing Agent. Email address is bboehs@deltonafl.gov. Phone is 386-878-8955.

ALL OTHER SPECIFICATIONS AND CONDITIONS REMAIN UNCHANGED.

RECEIPT OF THIS ADDENDUM IS HEREBY ACKNOWLEDGED

Built-Rite Construction of Central Florida Inc.
NAME OF BUSINESS

BY: Sandra C Large 3-11-13
SIGNATURE/DATE

Sandra C. Large, Pres.
NAME & TITLE, TYPED OR PRINTED

402 N. Center St.
MAILING ADDRESS

Pierson, FL 32180
CITY, STATE, ZIP CODE

BIDDER'S CONTACT AND INFORMATION FORM
(SECTION 00110)

Bidder (Company) Name: Built-Rite Construction of Central Florida, Inc.	F. E. I. N. or SS Number: 59-3484839
Mailing Address: 402 N. Center Street	Street Address: 402 N. Center St.
City, State, Zip: Pierson, FL 32180	City, State, Zip: Pierson, FL 32180
Type of Entity: *(Circle one)* Corporation Partnership Proprietorship Joint Venture	*I hereby certify that this bid is made without prior understanding, agreement, or connection with any corporation, firm, or person submitting a bid for the same materials, supplies or equipment, and is in all respects fair and without collusion or fraud. I agree to abide by all conditions of this bid and certify that I am authorized to sign this bid for the Bidder.* X Sandra C Large Authorized Signature (Manual)
Incorporated in the State of: Florida Year: 1998	Typed or Printed Name: Sandra C. Large
Telephone Number: (386) 749-0312	Title: President
Fax Number: (386) 749-0434	
Email contact info: brci9@aol.com	

SECTION 00300

BID RESPONSE FORM

Proposal of Built-Rite Construction of Central Florida, Inc. hereinafter called "Bidder", a Corporation doing business as Built-Rite Construction of Central Florida, Inc. to the City of Deltona, Florida hereafter called "Owner". The Bidder, in compliance with the Owner's invitation for bids for the construction of:

City of Deltona

ITB #PW-13-06

TIPTON DRIVE IMPROVEMENTS

having examined the plans and specifications with related documents and the site of the proposed work, and being familiar with all of the conditions surrounding the construction of the proposed project including the availability of materials and labor, hereby proposes to furnish all labor, materials, and supplies; and to construct the project in accordance with the Contract Documents, within the time set forth herein, and at the prices stated below. These prices are to cover all expenses incurred in performing the work required under the Contract Documents, of which this proposal is a part.

Bidder accepts all of the terms and conditions of the Advertisement for Bids and General Conditions, Instructions, and Information for Bidders.

Bidder hereby agrees to commence work under contract on or before a date to be specified in a written "Notice to Proceed" of the Owner and to substantially complete the Project within 120 consecutive calendar days and to fully complete the Project within 150 consecutive calendar days thereafter as stipulated in the specifications. Bidder further agrees to pay any liquidated damages, as specified in the Agreement, for each consecutive calendar day thereafter.

Bidder has examined and carefully studied the Bidding Documents and the following addendum receipt of which is hereby acknowledged:

No. 1	Dated: 3-8-13	No. _____	Dated: _____
No. _____	Dated: _____	No. _____	Dated: _____
No. _____	Dated: _____	No. _____	Dated: _____
No. _____	Dated: _____	No. _____	Dated: _____

BASE PROPOSAL: Bidder agrees to perform all of the work described in the specifications and shown on the plans for the sum shown in the schedule below:

Item No.	Description	Qty	Unit	Unit Price	Total Price
General Administrative					
1	Mobilization/Demobilization	1	LS	$8,000.00	$8,000.00
2	General Requirements, Bonds, Permits, etc.	1	LS	$3,500.00	$3,500.00
3	Indemnification	1	LS	$ 100.00	$ 100.00
4	Testing Allowance (Roadway and Pipe Compaction)	1	LS	$3,000.00	$3,000.00
Stormwater Sitework					
5	Layout and As-Built Survey	1	LS	$5,500.00	$5,500.00
6	Temporary Erosion Protection	1	LS	$3,500.00	$3,500.00
7	Maintenance of Traffic	1	LS	$5,000.00	$5,000.00
8	Clearing and Grubbing	1	LS	$10,000.00	$10,000.00
9	Site Grading	1	LS	$15,000.00	$15,000.00
10	Remove and Dispose Existing Drainage Inlets	4	EA	$ 250.00	$ 1,000.00
11	Remove and Dispose Existing Drainage Culverts	225	LF	$ 8.00	$1,800.00
12	Remove and Replace Driveway	90	SY	$ 35.00	$3,150.00
13	Remove and Replace Pavement	550	SY	$ 45.00	$24,750.00
14	Furnish and Install 14" x 23" Elliptical RCP	55	LF	$ 38.00	$2,090.00
15	Furnish and Install 18" Reinforced Concrete Pipe	55	LF	$ 35.00	$1,925.00
16	Furnish and Install 36" Reinforced Concrete Pipe (<10-ft depth)	775	LF	$ 50.00	$38,750.00
17	Furnish and Install 36" Reinforced Concrete Pipe (>10-ft depth)	275	LF	$ 65.00	$17,875.00
18	Type "C" Inlet	3	EA	$1,800.00	$ 5,400.00
19	Type "D" Inlet - 6-ft Alternate B	2	EA	$3,500.00	$7,000.00
20	Type "J" Manhole - 6-ft Alternate A (<10-ft depth)	2	EA	$3,500.00	$7,000.00
21	Type "J" Manhole - 6-ft Alternate A (>10-ft depth)	2	EA	$4,500.00	$9,000.00
22	Modified Type "H" Outfall Structure	1	EA	$5,500.00	$5,500.00
23	Furnish and Install 36" Headwall	1	EA	$4,500.00	$4,500.00
24	Furnish and Install Rip Rap	110	SY	$ 75.00	$8,250.00
Water Main Conflict					
25	45º Bend (FLG.)	4	EA	$ 150.00	$ 600.00
26	Furnish and Install PVC C900 Pipe (restrained joint)	35	LF	$ 75.00	$2,625.00
27	Remove and Replace Pavement Related to Water Main Conflict	40	SY	$ 45.00	$1,800.00
				TOTAL BASE BID	$ 196,615.00

TOTAL BASE BID IN WORDS:

One hundred ninety six thousand six hundred fifteen **DOLLARS AND** 00**/100 CENTS**

The unit prices provided above shall include all labor, materials, bailing, shoring, removal, overhead, profit, insurance, etc., to cover the finished work of the several kinds required. Any changes to the Work after issuance of the Notice of Award shall be processed in accordance with Articles 10, 11, and 12 of the General Conditions (Section 00700) and Article 5 of the Agreement with the Owner.

Bidder understands that the Owner reserves the right to reject any or all bids and to waive any informalities in the bidding.

A bid security, attached in the sum of five (5) percent of the Total Bid Amount, is to become the property of the Owner in the event contract and bond are not executed within thirty (30) days of the Owner issuing a Notice of Award, as liquidated damages for the delay and additional expense to the Owner caused thereby.

Respectfully submitted:

By: Built-Rite Construction of Central Florida, Inc.
(Business Name)

(SEAL - if bid is by corporation)

402 N. Center St.
(Business Address)

Pierson, FL 32180
(Business City, State, Zip Code)

Sandra C. Large
(Signature)

Sandra C. Large
(Printed Name)

President
(Title)

SCHEDULE OF BASE BID MANUFACTURERS/SUPPLIERS
(SECTION 300A)

The Contract Documents are based upon the equipment or products available from the manufacturers/suppliers denoted as "A", "B", etc. However, the Bidder must indicate in his Bid which Base Bid manufacturer/supplier he intends to use for each item of equipment listed by circling one (1) of the listed manufacturers/suppliers. Should the Bidder fail to circle a named supplier, he hereby agrees to provide the item listed as "A". After receipt of bids, the Bidder may not substitute for any manufacturer or supplier circled. Listed manufacturers/suppliers identified as deductive alternates will be considered as a deductive alternate as presented in the Deductive Alternate Section of the Bid Form.

If the Bidder desires to propose one (1) or more substitution or "or equal" manufacturers/suppliers, he may write in the name of such substitution or "or equal" in the spaces provided on the pages following the lists, but he must, nevertheless, also circle one of the listed manufacturers/suppliers. All substitutions or "or equal" items must be identified at the time of Bid (see paragraph 6.7 of the General Conditions as amended by the Supplementary Conditions). Substitutions or "or equal" items will **not** be considered when determining the Apparent Lowest Bidder. Substitutions or "or equal" items will **not** be evaluated or considered until after the "Effective Date" of the Agreement. The Bidder shall base his Bid on providing one of the listed manufacturers/suppliers and shall assume for bidding purposes that all substitutions or "or equal" items will not be accepted.

If the proposed substitution or "or equal" manufacturer/supplier is determined "not equivalent" by the Engineer, the Bidder must use the circled manufacturer/supplier. If the Bidder fails to indicate which listed manufacturer/supplier he intends to use or if a substitution or an "or equal" is rejected, he must use the manufacturer/supplier listed as "A". Also, if the Bidder circles more than one listed manufacturer/supplier, he must use the first manufacturer/supplier circled (unless a substitution or "or equal" is approved).

Each proposed substitution or "or equal" will be evaluated in accordance with Paragraph 6.7 of the General Conditions as amended by the Supplementary Conditions following the Effective Date of the Agreement.

In addition to the reimbursement required under Paragraph 6.7 of the General Conditions, the Contractor shall also reimburse the Owner for any engineering costs directly attributable to the change in manufacturers/suppliers, caused by the acceptance of proposed substitution or "or equal" items, such as; additional field trips for the Engineer, additional redesign costs, and additional review costs, etc. Other costs directly attributable to the change in manufacturers/suppliers caused by the acceptance of proposed substitution or "or equal" items such as increased electrical requirements, larger building, modifications to structures, additional pumps, piping or tankage, etc., shall be borne by others and not by the Owner. Bidder further agrees that the use of substitute equipment offered will not affect the completion date.

The Owner may request, and the Bidder shall supply, complete information on proposed substitution or "or equal" items prior to the Notice of Award.

Category I - **SCHEDULE OF BASE BID MANUFACTURERS / SUPPLIERS (SECTION 300A)**

Item No.	Equipment Item or Material	Specification Section No.	Manufacturer/Supplier
1.	Storm Structures	3410	Hanson
2.	RCP	3612	Hanson
3.	C900	15050	National
4.	MJ Fittings	15050	Tyler Union
5.			
6.			
7.			

SUBSTITUTION LIST OF MANUFACTURERS / SUPPLIERS
(SECTION 00300B)

Bidder proposes the following substitutions and "or equal" items of alternate manufacturers/suppliers for the equipment of material categories so identified:

	Equipment Item Material	Drawing No.	Spec. Section	Substitute/"or equal" Manufacturer/Supplier (List One Only)	Proposed Price Deduct
1.	No substitutions				
2.					
3.					
4.					
5.					
6.					
7.					
9.					
10.					

SUBSTITUTIONS AND "OR EQUAL"

The above signed as Bidder agrees that substitutions or "or equal" items will not be considered until after the "Effective Date of the Agreement" and will be evaluated in accordance with Paragraphs 6.7, 6.7.1 and 6.7.2, of the General Conditions as amended by the Supplementary Conditions. If Bidder intends to propose substitutions or "or equal" items after the "Effective Date of the Agreement", it is agreed that these items will be listed on the Substitution List included with the Bid (form provided herein). Only the proposed substitutions or "or equal" items listed on the Substitution List will be evaluated by the Engineer in accordance with the General Conditions.

QUESTIONNAIRE FORM
(SECTION 00301)

DATE: March 13, 2013

PROJECT IDENTIFICATION **City of Deltona – Public Works Division**
TIPTON DRIVE IMPROVEMENTS

NAME OF BIDDER: Built-Rite Construction of Central Florida, Inc.

BUSINESS ADDRESS: 402 N. Center St. Pierson, FL 32180

TELEPHONE NO: 386-749-0312

CONTRACTOR'S FLORIDA LICENSE NO: CUC057414

The signed bidder warrants the truth and accuracy of all statements and answers herein contained. Include additional sheets if necessary.

1. How many years has your organization been in business as a General Contractor? 15

2. Have you ever failed to complete work awarded to you? If so, where and why?

   No

3. Name three (3) municipalities or government entities for which you have performed similar projects as this one and to which you refer?

   City of Umatilla / Lake County
   City of Deltona / Volusia County
   City of Ormond Beach

4. Have you personally inspected the site of the proposed Work? Describe any anticipate problems with the site and your proposed solutions.

   yes

5. Will you Subcontract any part of this Work? If so, describe which portion(s).

   MOT
   Paving

6. What equipment do you own that is available for the Work? (attach additional sheets if necessary)

unlimited equipment resources owned

7. What equipment will you purchase for the Work?

None

8. What equipment will you rent for the Work?

None

9. The following is given as a summary of the Financial Statement of the undersigned: (List Assets and Liabilities and use insert sheet if necessary.)

See attached sheet

10. State the true and exact, correct, and complete name under which you do business.
Bidder is: Built-Rite Construction of Central Florida, Inc.

Built-Rite Construction of Central Florida, Inc.
Summary Balance Sheet
As of December 31, 2012

	Dec 31, 12
ASSETS	
Current Assets	
Checking/Savings	298,969.80
Accounts Receivable	430,527.90
Other Current Assets	175,959.00
Total Current Assets	905,456.70
Fixed Assets	796,243.53
Other Assets	-202.79
TOTAL ASSETS	**1,701,497.44**
LIABILITIES & EQUITY	
Liabilities	
Current Liabilities	
Accounts Payable	370,008.55
Credit Cards	2,410.87
Other Current Liabilities	19,296.38
Total Current Liabilities	391,715.80
Long Term Liabilities	558,000.00
Total Liabilities	949,715.80
Equity	751,781.64
TOTAL LIABILITIES & EQUITY	**1,701,497.44**

SUB-CONTRACTORS AND AFFILIATES FORM
(SECTION 00301A)

The following are a list of Sub Contractors or Affiliates that will be utilized in this project. Use additional sheets if necessary.

1. **Firm Name:** Halifax Paving, Inc.
   Trade: Paving
   Firm Owner: Tad Durrance
   Firm Address: P.O. Box 730549 Ormond Bch, FL 32713-0549
   Firm Phone Number: 386-676-0200

2. **Firm Name:** Better Barricades, Inc.
   Trade: MOT
   Firm Owner: Abby/Phillip Naff
   Firm Address: 1725 Tionia Rd New Smyrna Bch, FL 32168-9290
   Firm Phone Number: 386-427-4971

3. **Firm Name:** _____
   Trade: _____
   Firm Owner: _____
   Firm Address: _____
   Firm Phone Number: _____

4. **Firm Name:** _____
   Trade: _____
   Firm Owner: _____
   Firm Address: _____
   Firm Phone Number: _____

5. **Firm Name:** _____
   Trade: _____
   Firm Owner: _____
   Firm Address: _____
   Firm Phone Number: _____

REFERENCES FORM
(SECTION 00301B)

The City of Deltona is seeking Contractors who have proven past, positive experiences in projects of similar and same size of scope of work. These references are required with your submittals. References shall contain the Owners contact information for the projects referenced. References with another Contractor listed as the Owner shall not be accepted. Contractors not having past, positive experiences in projects of similar and same size of scope of work, as the Prime Contractor, will not be considered. References which are located in foreign countries are not acceptable.

1. **Project Name:** Please see attached list
   Project Value: _____
   Project Description: _____
   Project Owner: _____
   Owner contact information: _____
   Project Location: _____
   Project Start and End Dates: _____

2. **Project Name:** _____
   Project Value: _____
   Project Description: _____
   Project Owner: _____
   Owner contact information: _____
   Project Location: _____
   Project Start and End Dates: _____

3. **Project Name:** _____
   Project Value: _____
   Project Description: _____
   Project Owner: _____
   Owner contact information: _____
   Project Location: _____
   Project Start and End Dates: _____

4. **Project Name:** _____
   Project Value: _____
   Project Description: _____
   Project Owner: _____
   Owner contact information: _____
   Project Location: _____
   Project Start and End Dates: _____

REFERENCES FORM
(SECTION 00301B CONTINUED)

5. **Project Name:** _____
   Project Value: _____
   Project Description: _____
   Project Owner: _____
   Owner contact information: _____
   Project Location: _____
   Project Start and End Dates: _____

6. **Project Name:** _____
   Project Value: _____
   Project Description: _____
   Project Owner: _____
   Owner contact information: _____
   Project Location: _____
   Project Start and End Dates: _____

7. **Project Name:** _____
   Project Value: _____
   Project Description: _____
   Project Owner: _____
   Owner contact information: _____
   Project Location: _____
   Project Start and End Dates: _____

8. **Project Name:** _____
   Project Value: _____
   Project Description: _____
   Project Owner: _____
   Owner contact information: _____
   Project Location: _____
   Project Start and End Dates: _____

PROJECT EXPERIENCE

Not all projects listed

Owner	Project	Value	Contact	Date
Volusia County	Howland Blvd	3.1mil	Todd Buckles 386-736-5967	2003
Volusia County	10th St. Improvement	4.5mil	Todd Buckles 386-736-5967	2005
City of Palm Coast	Belle Terre Pkwy	2.4mil	Jim Davis 386-676-0200	2008
Volusia County	Williamson Blvd	3.4mil	Todd Buckles 386-736-5967	2006
Volusia County	Saxon Blvd	3mil	Todd Buckles 386-736-5967	2004
Volusia County	W. Rhode Isl. Ave. Ext.	6.3mil	Todd Buckles 386-736-5967	2009
Town of Pierson	Washington Ave.	109K	Debbie Bass 386-749-2661	2009
City of DeLand	Runway 12 Airport	590K	Keith Riger 386-626-7197	2010
Volusia County	LPGA Blvd	2.2 mil	Todd Buckles 386-736-5967	2010
Flagler County	Two Bridge Replacements	225K	Jim Davis 386-676-0200	2010
City of Ormond Bch	SR40 Multi-Use Trail	180K	Larry Rivera 386-615-7049	2010
Flagler County	CR305 Bridge Replacement	227K	Jim Davis 386-676-0200	2010
City of Ormond Bch	N. Ridgewood Ave. Sidewalk	52K	Larry Rivera 386-615-7049	2011
Flagler County	Matanzas Woods Pkwy	2.1mil	Jim Davis 386-676-0200	2005
City of Palm Coast	Major Rdwy Crossing Culvert Replace.	420K	Brian Rothwell 386-986-3731	2011
Volusia County	Various County Sidewalks	130K	Shaira Resto 386-736-5966	2011
Lake County	S. Umatilla Water System	1.1mil	Alan Kirkland 352-483-9043 (in progress)	2012
Flagler County	CR305/CR304	112K	Steve Blair 386-676-0200	2012
City of Crescent City	Magnolia St. Sewer Line Replace.	20K	Patrick Kennedy 386-698-2525	2012

Sanford/Orlando Int. Airport	Runway 9L Extension	1 Mil	Steve Blair, 386-676-0200 (in progress)	20

FDOT	SR40	1+mil	Anderson/Columbia 386-755-9132	2005
FDOT	SR44	2.3mil	Middlesex Corp. 407-294-5322	2004
FDOT	SR100	690K	P&S Paving 386-258-7911	2004
FDOT	SR100	2+mil	P&S Paving 386-258-7911	2005
FDOT	SR15A	430K	P&S Paving 386-258-7911	2002
FDOT	SR11	317K	P&S Paving 386-258-7911	2007
FDOT	SR50	554K	John Carlo, Inc. 904-696-8865	2009
FDOT	SR600	178K	Halifax Paving, Inc. 386-676-0200	2009-2010
FDOT	SR3	307K	P&S Paving, 386-258-7911	2010
FDOT	SR520	377K	Halifax Paving, Inc. 386-676-200	2011
FDOT	SR15/US17	502K	Halifax Paving, Inc. 386-676-0200	2012
FDOT	SR421	109K	Halifax Paving, Inc. 386-676-0200	
FDOT	SR434	2.5 Mil	Halifax Paving, Inc. 386-676-0200 (in progress)	

Howland Blvd	**Rdwy construction, storm and water main and force main**
10th St.	**Rdwy construction, storm and water and force main**
Belle Terre Pkwy	**Bridge culvert construction and retaining wall**
Williamson Blvd	**Rdwy construction, storm and water main and force main**
Saxon Blvd	**Rdwy construction, storm and water main and force main**
W. Rhode Isl. Ave.	**Rdwy construction, storm and water main and force main**
Matanzas Woods	**Bridge culvert and water main**
Washington Ave.	**Culvert Repair**
LPGA Blvd	**Rdwy Construction, storm and water main and force main**
Runway 12 Airport	**Box culvert and stabilization**
ALL FDOT Projects	**Bridge work, storm drain, bridge culvert, piling , retaining wall, etc.**
CR305	**Bridge Replacement**
S. Umatilla Water System	**Underground Utilities**
CR305/CR304	**Gravity Wall**
SR15	**Drainage**

CORPORATE RESOLUTION FORM
(SECTION 00420)

I, Richard F. Large, Jr., Secretary of Built-Rite Construction of Central Florida, Inc., a corporation organized and existing under the laws of the State of Florida, hereby certify that at a meeting of the Board of Directors of the Corporation duly called and held on February 26, 2013 at which a quorum was present and acting throughout, the following resolutions were adopted and are now in full force effect:

RESOLVED that the following individuals of this corporation are authorized to execute on behalf of this corporation A Bid and Agreement to City of Deltona for the construction of Tipton Drive Improvements.

I further certify that the names of the officers of this corporation and any other persons authorized to act under this resolution and their official signatures are as follows:

NAME	OFFICE	OFFICIAL SIGNATURE
Sandra C. Large	President	Sandra C. Large
Richard F. Large, Jr.	VP, S, T	R Large

IN WITNESS THEREOF, I have hereunto subscribed my name as Secretary and affixed the seal of the corporation this 11th day of March, 2013

HOLD HARMLESS AND INDEMNITY AGREEMENT
(SECTION 00430)

Built Rite Construction of Central Florida, Inc, agrees through the signing of this document by an authorized party or agent that it shall defend, indemnify and hold harmless the City of Deltona, and its agents, employees, and public officials from and against all suits, losses, claims, demands, judgments of every name and description arising out of or incidental to the performance of this contract or work performed thereunder, whether or not due to or caused by the negligence of the City of Deltona, its agents, employees, and public officials excluding only the sole negligence of the City of Deltona, its agents, employees, and Public Officials.

This provision shall also pertain to any claims brought against the City of Deltona, its agents, employees, and public officials by an employee of the named Contractor, any Sub-contractor, or anyone directly or indirectly employed by any of them.

The Contractor's obligation to indemnify the City of Deltona, its agents, employees and public officials under this provision shall be limited to $1,000,000 per occurrence which the parties agree bears a reasonable commercial relationship to the contract.

The Contractor agrees to accept, and acknowledges as adequate remunerations, the consideration of $10, which is part of the agreed bid price, the promises contained herein, and other good and valuable consideration, the receipt of which is hereby acknowledged, for agreement to enter into this Hold Harmless and Indemnity Agreement.

Sandra C Large
CONTRACTOR

March 11, 2013
DATE

DRUG-FREE WORKPLACE FORM
(SECTION 00440)

The undersigned Bidder in accordance with Florida Statute 287.087, hereby certifies that Built-Rite Construction of Central Florida, Inc. does:
(*Name of Business*)

1. Publish a statement notifying employees that the unlawful manufacture, distribution, dispensing, possession, or use of a controlled substance is prohibited in the workplace and specifying the actions that will be taken against employees for violations of such prohibition.

2. Inform employees about the dangers of drug abuse in the workplace, the business's policy of maintaining a drug-free workplace, any available drug counseling, rehabilitation, and employee assistance programs, and the penalties that may be imposed upon employees for drug abuse violations.

3. Give each employee engaged in providing the commodities or contractual services that are proposed a copy of the statement specified in subsection (1).

4. In the statement specified in subsection (1), notify the employees that, as a condition of working on the commodities or contractual services that are under bid, the employee will abide by the terms of the statement and will notify the employer of any conviction of, or plea of guilty or nolo contendere to, any violation of Chapter 893 or of any controlled substance law of the United States or any state, for a violation occurring in the workplace no later than five (5) days after such conviction.

5. Impose a sanction on, or require the satisfactory participation in a drug abuse assistance or rehabilitation program if such is available in the employee's community, by any employee who is so convicted.

6. Make a good faith effort to continue to maintain a drug-free workplace through implementation of this section.

As the person authorized to sign the statement, I certify that this firm complies fully with the above requirements.

x Sandra C Large
Bidder's Signature

March 11, 2013
Date

PROPOSER'S CERTIFICATION FORM
(SECTION 00460)

I have carefully examined the Request for Proposal, Instructions to Proposers, General and/or Special Conditions, Vendor's Notes, Specifications, proposed agreement and any other documents accompanying or made a part of this Request for Proposal.

I hereby propose to furnish the goods or services specified in the Request for Proposal at the prices and rates quoted in my Proposal. I agree that my Proposal will remain firm for a period of up to one hundred twenty (120) days in order to allow the City adequate time to evaluate the Proposal.

I agree to abide by all conditions of the Proposal and understand that a background investigation may be conducted by the City of Deltona prior to award.

I certify that all information contained in this Proposal is truthful to the best of my knowledge and belief. I further certify that I am a duly authorized to submit this Proposal on behalf of the vendor / contractor as its act and deed and that the vendor / contractor is ready, willing and able to perform if awarded the contract.

I further certify, under oath, that this Proposal is made without prior understanding, agreement, connection, discussion, or collusion with any other person, firm or corporation submitting a Proposal for the same product or service; no officer, employee or agent of the City of Deltona Government or of any other Proposer interested in said Proposal; and that the undersigned executed this Proposer's Certification with full knowledge and understanding of the matters therein contained and was duly authorized to do so.

Name of Business

By: Sandra C. Large
Signature

Sandra C. Large, Pres.
Name & Title, Typed or Printed

402 N. Center St.
Mailing Address

Pierson, FL 32180
City, State, Zip Code

(386) 749-0312
Telephone Number

Sworn to and subscribed before me

This 11th day of

March, 20 13

Barbara A. Peacock
Signature of Notary

Notary Public, State of Florida

Personally known
-OR-
Produced Identification _____

BARBARA A. PEACOCK
MY COMMISSION # EE 178914
EXPIRES: April 16, 2016
Bonded Thru Notary Public Underwriters

SWORN STATEMENT UNDER SECTION 287.133(3)(A), FLORIDA STATUTES, ON PUBLIC ENTITY CRIMES (SECTION 00470)

THIS FORM MUST BE SIGNED IN THE PRESENCE OF A NOTARY PUBLIC OR OTHER OFFICER AUTHORIZED TO ADMINISTER OATHS.

This sworn statement is submitted to the City of Deltona by Sandra C. Large, President
(Individual's name and title)

For Built-Rite Construction of Central Florida, Inc
(Name of entity submitting sworn statement)

Whose business address is 402 N. Center St.
Pierson, FL 32180

And (if applicable) its Federal Employer Identification Number (FEIN) is 59-3484839
(if the entity has no FEIN, include the Social Security Number of the individual signing this sworn statement)

1. I understand that a "public entity crime" as defined in Section 287.133(1)(g), Florida Statutes, means a violation of any State or Federal law by a person with respect to and directly related to the transaction of business with any public entity or with an agency or political subdivision of any other state or with the United States, including, but not limited to, any bid or contract for goods or services to be provided to any public entity or an agency or political subdivision of any other state or a of the United States and involving antitrust, fraud, theft, bribery, collusion, racketeering, conspiracy, or material misrepresentation.

11. I understand that "convicted" or "conviction" as defined in Paragraph 287.133(1)(b), Florida Statutes, means a finding of guilt or a conviction of a public entity crimes, with or without an adjudication of guilt, in any Federal or State trial court of record relating to charges brought by indictment or information after July 1, 1989, as a result of a jury verdict, non-jury trial, or entry of a plea of guilty or nolo contendere.

12. I understand that an "affiliate' as defined in Section 287.133(1)(a), Florida Statutes, means:

    A predecessor or successor of a person convicted of a public entity crime: or an entity under the control of any natural person who is active in the management of the entity and how has been convicted of a public entity crime. The term "affiliate" includes those officers, directors, executives, partners, shareholders, employees, members, and agents who are active in the management of an affiliate. The ownership by one (1) person of shares constituting a controlling interest in another person, or a pooling of equipment or income among persons when not for fair market value under an arm's length agreement, shall be a prima facie case that one person controls another person. A person who knowingly enters into a joint venture with a person who has been convicted of a public entity crime in Florida during the preceding thirty-six (36) months shall be considered an affiliate.

13. I understand that a "person" as defined in Section 287.133(1)(e), Florida Statutes, means any natural person or entity organized under the laws of any state or of the United States with the legal power to enter into a binding contract and which bids or applies to bid on contracts for the provision of goods or services let by a public entity, or which otherwise transacts or applies to transact business with a public entity. The term "person" includes those officers, directors, executives, partners, shareholders employees, members, and agents who are active in management of an entity.

14. Based on information and belief, the statement which I have marked below is true in relation to the entity submitting this sworn statement. (You must indicate which statement applies.)

(SECTION 00470 Continued)

X Neither the entity submitting this sworn statement, nor any officers, directors, executives, partners, shareholders, employees, members, or agent who is active in management of the entity, nor the affiliate of the entity has been charged with and convicted of a public entity crime subsequent to July 1, 1989.

_____ The entity submitting this sworn statement, or one or more of the officers, directors, executives, partners, shareholders, employees, members or agent who are active in management of the entity, or an affiliate of the entity, has been charged with and convicted of a public entity crime subsequent to July 1, 1989.

_____ The entity submitting this sworn statement, or one or more of the officers, directors, executives, partners, shareholders, employees, members or agents who are active in management of the entity, or an affiliate of the entity, has been charged with and convicted of a public entity crime subsequent to July 1, 1989. However, there has been a subsequent proceeding before an Administrative Law Jury of the State of Florida, Division of Administrative Hearings and the Final Order entered by the Administrative Law Jury determined that it was not in the public interest to place the entity submitting this sworn statement on the convicted vendor list. (You must attach a copy of the final order).

I UNDERSTAND THAT THE SUBMISSION OF THIS FORM TO THE CITY OF DELTONA IS FOR THE CITY ONLY AND, THAT THIS FORM IS VALID THROUGH DECEMBER 31, OF THE CALENDAR YEAR IN WHICH IT IS FILED. I ALSO UNDERSTAND THAT I AM REQUIRED TO INFORM THE CITY PRIOR TO ENTERING IN TO A CONTRACT IN EXCESS OF THE THRESHOLD AMOUNT PROVIDED IN SECTION 287.017, FLORIDA STATUTES, FOR CATEGORY TWO OF ANY CHANGE IN THE INFORMATION CONTAINED IN THIS FORM.

Sandra C Large
SIGNATURE

March 11, 2013
DATE

State of Florida
County of Volusia

Personally appeared before me, the undersigned authority, Sandra C Large (name of individual signing) who, after first being sworn by me, affixed his/her signature in the space provided above on the 11th day of March, 2013.

Barbara A. Peacock
NOTARY PUBLIC

My commission expires:

BARBARA A. PEACOCK
MY COMMISSION # EE 178914
EXPIRES: April 16, 2016
Bonded Thru Notary Public Underwriters

NON COLLUSION AFFIDAVIT FORM
(SECTION 00480)

STATE OF FLORIDA

COUNTY OF VOLUSIA

Sandra C. Large, being first duly sworn deposes and says that:

i. He/She is the President, of Built-Rite Construction of Central Florida, Inc., the Bidder that has submitted the attached Bid;

ii. He/She is fully informed respecting the preparation and contents of the attached Bid and of all pertinent circumstances respecting such Bid;

iii. Such Bid is genuine and is not a collusive or sham Bid;

iv. Neither the said Bidder nor any of its officers, partners, owners, agents, representatives, employees, or parties in interest, including this affidavit, have in any way, colluded, conspired, connived or agreed, directly or indirectly, with any other Bidder, firm or person to submit a collusive or sham Bid in connection with the Contract for which the attached Bid has been submitted; or to refrain from bidding in connection with such Contract; or have in any manner, directly or indirectly, sought by agreement or collusion,, or communication, or conference with any Bidder, firm, or person to fix the price or prices in the attached Bid or of any other Bidder, or to fix any overhead, profit, or cost elements of the Bid price or the Bid price of any other Bidder, or to secure through any collusion, conspiracy, connivance, or unlawful agreement any advantage against (Recipient), or any person interested in the proposed Contract;

v. The price or prices quoted in the attached Bid are fair and proper and are not tainted by any collusion, conspiracy, connivance, or unlawful agreement on the part of the Bidder or any other of its agents, representatives, owners, employees or parties in interest, including this affidavit.

By Sandra C Large

Sworn and subscribed to before me this 11th day of March, 2013, in the State of Florida, County of Volusia.

Barbara A. Peacock Notary Public

My Commission expires:

BARBARA A. PEACOCK
MY COMMISSION # EE 178914
EXPIRES: April 16, 2016
Bonded Thru Notary Public Underwriters

TRENCH SAFETY AFFIDAVIT FORM
(SECTION 00490)

(FAILURE TO COMPLETE THIS FORM MAY RESULT IN THE BID BEING DECLARED NON-RESPONSIVE)

Built-Rite Construction of Central Florida, Inc. (NAME OF CONTRACTOR) hereby provides written assurance that compliance with applicable Trench Safety Standards identified in the Occupational Safety & Health Administration's Excavation Safety Standards (OSHA) 29 C.F.R.S. 1926.650 Subpart P will be adhered to during trench excavation in accordance with Florida Statutes 553.60 through 533.64 inclusive (1990) "Trench Safety Act".

The specific methods of compliance with applicable Trench Safety Standards, and the associated cost of compliance (costs included in the Bid Price), are as follows (attach additional sheets if necessary):

Item and Safety Measure	Cost
Lay Back Slopes and	$ 5,000.00
Sheeting/Shoring as necessary	$
	$
	$
	$
	$
	$
TOTAL	$ 5,000.00

By the signature of its undersigned authorized representatives, the Bidder hereby assures the CITY OF DELTONA that any such excavation performed by the Bidder will be performed in compliance with all applicable trench safety standards.

By Sandra Large

Sworn and subscribed to before me this 11th day of March, 2013, in the State of Florida, County of Volusia.

Barbara A. Peacock Notary Public

My Commission expires:

BARBARA A. PEACOCK
MY COMMISSION # EE 178914
EXPIRES: April 16, 2016
Bonded Thru Notary Public Underwriters

COPY

BID BOND FORM
(SECTION 00410)

BD133093

KNOWN ALL MEN BY THESE PRESENTS, that we, the undersigned, Crossroads Site Development & Underground Utilities, LLc as Principal, and Auto Owners Insurance Co Inc as Surety, are hereby held and firmly bound unto the City of Deltona, Florida as Owner in the penal sum of, (five percent 5%) of the Contract Bid Five-Percent for the payment of which, well and truly to be made, we hereby and severally bind ourselves, successors and assigns to pay Owner upon default of Bidder the penal sum set forth on the face of this Bond. Signed, this First day of March, 2013.

The condition of the above obligation is such that whereas the Principal has submitted to the City of Deltona, Florida a certain bid, attached hereto and hereby made a part hereof, to enter into a contract in writing, for the **TIPTON DRIVE IMPROVEMENTS.**

NOW THEREFORE,

1. Default of Bidder shall occur upon the failure of Bidder to deliver within the time required by the Bidding Documents the executed Agreement required by the Bidding Documents and any performance and payment bonds required by the Bidding Documents and Contract Documents.

2. This obligation shall be null and void if:

   2.1 Owner accepts Bidder's bid and Bidder delivers within the time required by the Bidding Documents (or an extension thereof agreed to in writing by Owner) the executed Agreement required by the Bidding Documents and any performance and payment bonds required by the Bidding Documents and Contract Documents, or

   2.2 All bids are rejected by Owner, or

   2.3 Owner fails to issue a notice of award to Bidder within the time specified in the Bidding Documents (or any extension thereof agreed to in writing by Bidder and, if applicable, consented to by Surety when required by paragraph 5 hereof).

3. Payment under this Bond will be due and Payable upon default of Bidder and within thirty (30) calendar days after receipt of Bidder and surety of written notice of default from Owner which notice will be given with reasonable promptness, identifying this Bond and the Project and including a statement of the amount due.

4. Surety waives notice of any and all defenses based on or arising out of any time extension to issue notice of award agreed to in writing by Owner and Bidder, providing that the time for issuing notice of award including extensions shall not in the aggregate exceed one hundred twenty (120) days from Bid Due without Surety's written consent.

5. No suite or action shall be commenced under this Bond prior to thirty (30) calendar days after the notice of default required in paragraph 3 above is received by Bidder and Surety, and in no case later than one year after Bid Due Date.

6. Any suite or action under this Bond shall be commenced only in a court of competent jurisdiction located in the state in which the Project is located.

7. Notice required hereunder shall be in writing and sent to Bidder and Surety at their respective addresses shown on the face of this Bond. Such notices may be sent by personal delivery, commercial courier or by United States Registered or Certified Mail, return receipt requested, postage pre-paid, and shall be deemed to be effective upon receipt by the part concerned.

8. Surety shall cause to be attached to this Bond a current and effective Power of Attorney evidencing the authority of the officer, agent or representative who executed this Bond on behalf of Surety to execute, seal and deliver such Bond and bind the Surety thereby.

9. This bond is intended to conform to all applicable statutory requirements. Any applicable requirement of any applicable statute that has been omitted from this Bond shall be deemed to be included herein as if set forth at length. If any provision of the Bond conflicts with any applicable provision of any applicable statute, then the provision of said statute shall govern and the remainder of the Bond that is not in conflict therewith shall continue in full force and effect.

10. The term "bid' as used herein includes a bid, offer or proposal as applicable.

IN WITNESS WHEREOF, the Principal and the Surety have hereunto set their hands and seals, and such of them as are corporations have caused their corporate seals to be hereto affixed and these presents to be signed by their proper officers, the day and year first set forth above.

Principal (Print Full Name):

WILLIAM J LORENZO

By: _____ (LS)

Title: V. P.

Attest: _____
Signature and Title

Surety (Print Full Name):

Auto Owners Insurance Company, Inc

Surety's Name and Corporate Seal

By: _____
Signature (attach power of attorney)

Title: Attorney In Fact

Attest: Rosa M. Grant-Account Manager
Signature and Title

March 1, 2013
(DATE)

IMPORTANT – Surety companies executing bonds must appear on the Treasury Department's most current list (Circular 570 as amended) and be authorized to transact business in the State of Florida.

DATE AND ATTACH TO ORIGINAL BOND

AUTO-OWNERS INSURANCE COMPANY

LANSING, MICHIGAN

POWER OF ATTORNEY

NO. BD133093

KNOW ALL MEN BY THESE PRESENTS: That the AUTO-OWNERS INSURANCE COMPANY AT LANSING, MICHIGAN, a Michigan Corporation, having its principal office at Lansing, County of Eaton, State of Michigan, adopted the following Resolution by the directors of the Company on January 27, 1971, to wit:

"RESOLVED, That the President or any Vice President or Secretary or Assistant Secretary of the Company shall have the power and authority to appoint Attorneys-in-fact, and to authorize them to execute on behalf of the Company, and attach the seal of the Company thereto, bonds and undertakings, recognizances, contracts of indemnity, and other writings obligatory in the nature thereof. Signatures of officers and seal of Company imprinted on such powers of attorney by facsimile shall have same force and effect as if manually affixed. Said officers may at any time remove and revoke the authority of any such appointee."

Does hereby constitute and appoint JAMES M SULLIVAN JR

its true and lawful attorney(s)-in-fact, to execute, seal and deliver for and on its behalf as surety, any and all bonds and undertakings, recognizances, contracts of indemnity and other writings obligatory in the nature thereof, and the execution of such instrument(s) shall be as binding upon the AUTO-OWNERS INSURANCE COMPANY AT LANSING, MICHIGAN as fully and amply, to all intents and purposes, as if the same had been duly executed and acknowledged by its regularly elected officers at its principal office.

IN WITNESS WHEREOF, the AUTO-OWNERS INSURANCE COMPANY AT LANSING, MICHIGAN, has caused this to be signed by its authorized officer this 2nd day of November, 2012.

Kenneth R. Schroeder — Senior Vice President

STATE OF MICHIGAN }ss.
COUNTY OF EATON

AMANDA LAMP NOTARY PUBLIC COUNTY OF EATON My Commission Expires JANUARY 1, 2014 Acting in the county of STATE OF MICHIGAN

On this 2nd day of November, 2012, before me personally came Kenneth R. Schroeder, to me known, who being duly sworn, did depose and say that they are Kenneth R. Schroeder, Senior Vice President of AUTO-OWNERS INSURANCE COMPANY, the corporation described in and which executed the above instrument, that they know the seal of said corporation, that the seal affixed to said instrument is such Corporate Seal, and that they received said instrument on behalf of the corporation by authority of their office pursuant to a Resolution of the Board of Directors of said corporation.

My commision expires January 1st, 2014.

Amanda Lamp — Notary Public

STATE OF MICHIGAN }ss.
COUNTY OF EATON

I, the undersigned First Vice President, Secretary and General Counsel of AUTO-OWNERS INSURANCE COMPANY, do hereby certify that the authority to issue a power of attorney as outlined in the above board of directors resolution remains in full force and effect as written and has not been revoked and the resolution as set forth are now in force.

Signed and sealed at Lansing, Michigan. Dated this 1st day of March, 2013

AUTO-OWNERS INSURANCE CO. Seal LANSING, MICH.

William F. Woodbury, First Vice President, Secretary and General Counsel

BIDDER'S CONTACT AND INFORMATION FORM
(SECTION 00110)

Bidder (Company) Name: **Crossroads Site Development & Underground Utilities LLC**	F. E. I. N. or SS Number: **26-0386699**
Mailing Address: **284 Suite B Hand Ave**	Street Address: **Same**
City, State, Zip: **Ormond Beach Fl, 32174**	City, State, Zip: **same**
Type of Entity: *(Circle one)* Corporation (Partnership Proprietorship Joint Venture	*I hereby certify that this bid is made without prior understanding, agreement, or connection with any corporation, firm, or person submitting a bid for the same materials, supplies or equipment, and is in all respects fair and without collusion or fraud. I agree to abide by all conditions of this bid and certify that I am authorized to sign this bid for the Bidder.* X _____ Authorized Signature (Manual)
Incorporated in the State of: **Florida** Year: **2007**	Typed or Printed Name: **William J Lorenzo**
Telephone Number: (**386**) **672-4200**	Title: **V.P.**
Fax Number: (**386**) **671-2687**	
Email contact info: **Crossroadsdu@aol.com**	

Question # 3 – What is the amount for the testing allowance??

Answer # 3 – The testing allowance is listed as $3,000.00.

The bid due date remains Wednesday, March 13, 2013 at 2:00 p.m. All prospective bidders are hereby instructed not to contact the Engineer of Record or any member of the City of Deltona Commission, City Manager, or City of Deltona Staff members other than the noted contact person regarding this Invitation to Bid or their bid proposal at any time during the solicitation or award process. Any such contact shall be cause for rejection of your bid proposal.

All inquiries are to be directed to the Purchasing Agent for the Public Works Division at the City of Deltona. Contact for this solicitation is: Brian Boehs, Purchasing Agent. Email address is bboehs@deltonafl.gov. Phone is 386-878-8955.

ALL OTHER SPECIFICATIONS AND CONDITIONS REMAIN UNCHANGED.

RECEIPT OF THIS ADDENDUM IS HEREBY ACKNOWLEDGED

Crossroads Site Development & Underground Utilities

NAME OF BUSINESS

BY: [illegible signature] 3-11-13

SIGNATURE/DATE

William Lorenzo V.P.

NAME & TITLE, TYPED OR PRINTED

789 Suite B Hand Ave

MAILING ADDRESS

Ormond Bch Fl 32174

CITY, STATE, ZIP CODE

SECTION 00300

BID RESPONSE FORM

Proposal of Crossroads Site Development & Underground Utilities LLC, hereinafter called "Bidder", a LLC doing business as Same as Above to the City of Deltona, Florida hereafter called "Owner". The Bidder, in compliance with the Owner's invitation for bids for the construction of:

City of Deltona

ITB #PW-13-06

TIPTON DRIVE IMPROVEMENTS

having examined the plans and specifications with related documents and the site of the proposed work, and being familiar with all of the conditions surrounding the construction of the proposed project including the availability of materials and labor, hereby proposes to furnish all labor, materials, and supplies; and to construct the project in accordance with the Contract Documents, within the time set forth herein, and at the prices stated below. These prices are to cover all expenses incurred in performing the work required under the Contract Documents, of which this proposal is a part.

Bidder accepts all of the terms and conditions of the Advertisement for Bids and General Conditions, Instructions, and Information for Bidders.

Bidder hereby agrees to commence work under contract on or before a date to be specified in a written "Notice to Proceed" of the Owner and to substantially complete the Project within 120 consecutive calendar days and to fully complete the Project within 150 consecutive calendar days thereafter as stipulated in the specifications. Bidder further agrees to pay any liquidated damages, as specified in the Agreement, for each consecutive calendar day thereafter.

Bidder has examined and carefully studied the Bidding Documents and the following addendum receipt of which is hereby acknowledged:

No. 1	Dated: 3-~~15~~ 8-13	No. _____	Dated: _____
No. _____	Dated: _____	No. _____	Dated: _____
No. _____	Dated: _____	No. _____	Dated: _____
No. _____	Dated: _____	No. _____	Dated: _____

BASE PROPOSAL: Bidder agrees to perform all of the work described in the specifications and shown on the plans for the sum shown in the schedule below:

Item No.	Description	Qty	Unit	Unit Price	Total Price
General Administrative					
1	Mobilization/Demobilization	1	LS	$ ---------	$ 10,000-
2	General Requirements, Bonds, Permits, etc.	1	LS	$ ---------	$ 8,535-
3	Indemnification	1	LS	$ ---------	$ 1,000-
4	Testing Allowance (Roadway and Pipe Compaction)	1	LS	$ ---------	$ 3,000-
Stormwater Sitework					
5	Layout and As-Built Survey	1	LS	$ ---------	$ 5,000-
6	Temporary Erosion Protection	1	LS	$ ---------	$ 3,000-
7	Maintenance of Traffic	1	LS	$ ---------	$ 5,000-
8	Clearing and Grubbing	1	LS	$ ---------	$ 6,900-
9	Site Grading	1	LS	$ ---------	$ 11,000-
10	Remove and Dispose Existing Drainage Inlets	4	EA	$ 1000-	$ 4,000-
11	Remove and Dispose Existing Drainage Culverts	225	LF	$ 45-	$ 10,125-
12	Remove and Replace Driveway	90	SY	$ 50-	$ 4,500-
13	Remove and Replace Pavement	550	SY	$ 55-	$ 27,500-
14	Furnish and Install 14" x 23" Elliptical RCP	55	LF	$ 84-	$ 4,620-
15	Furnish and Install 18" Reinforced Concrete Pipe	55	LF	$ 84-	$ 4,620-
16	Furnish and Install 36" Reinforced Concrete Pipe (<10-ft depth)	775	LF	$ 98-	$ 75,950-
17	Furnish and Install 36" Reinforced Concrete Pipe (>10-ft depth)	275	LF	$ 110-	$ 30,250-
18	Type "C" Inlet	3	EA	$ 2200-	$ 6,600-
19	Type "D" Inlet - 6-ft Alternate B	2	EA	$ 6500-	$ 13,000-
20	Type "J" Manhole - 6-ft Alternate A (<10-ft depth)	2	EA	$ 5000-	$ 10,000-
21	Type "J" Manhole - 6-ft Alternate A (>10-ft depth)	2	EA	$ 5800-	$ 11,600-
22	Modified Type "H" Outfall Structure	1	EA	$ 8500-	$ 8,500-
23	Furnish and Install 36" Headwall	1	EA	$ 7500-	$ 7,500-
24	Furnish and Install Rip Rap	110	SY	$ 80-	$ 8,800-
Water Main Conflict					
25	45º Bend (FLG.)	4	EA	$ 1000-	$ 4,000-
26	Furnish and Install PVC C900 Pipe (restrained joint)	35	LF	$ 200-	$ 7,000-
27	Remove and Replace Pavement Related to Water Main Conflict	40	SY	$ 100-	$ 4,000-
				TOTAL BASE BID	**$ 296,000-**

TOTAL BASE BID IN WORDS:

Two Hundred Ninty Six Thousand Dollars DOLLARS AND 0 /100 CENTS

The unit prices provided above shall include all labor, materials, bailing, shoring, removal, overhead, profit, insurance, etc., to cover the finished work of the several kinds required. Any changes to the Work after issuance of the Notice of Award shall be processed in accordance with Articles 10, 11, and 12 of the General Conditions (Section 00700) and Article 5 of the Agreement with the Owner.

Bidder understands that the Owner reserves the right to reject any or all bids and to waive any informalities in the bidding.

A bid security, attached in the sum of five (5) percent of the Total Bid Amount, is to become the property of the Owner in the event contract and bond are not executed within thirty (30) days of the Owner issuing a Notice of Award, as liquidated damages for the delay and additional expense to the Owner caused thereby.

Respectfully submitted:

By: **Crossroads Site Development & Underground Utilities LLC**
(Business Name)

(SEAL - if bid is by corporation)

284 Suite B Hand Ave
(Business Address)

Ormond Beach FL #2174
(Business City, State, Zip Code)

(Signature)

William Lorenzo
(Printed Name)

V.P.
(Title)

SUBSTITUTION LIST OF MANUFACTURERS / SUPPLIERS
(SECTION 00300B)

Bidder proposes the following substitutions and "or equal" items of alternate manufacturers/suppliers for the equipment of material categories so identified:

	Equipment Item Material	Drawing No.	Spec. Section	Substitute/"or equal" Manufacturer/Supplier (List One Only)	Proposed Price Deduct
1.		N.A.			
2.					
3.					
4.					
5.					
6.					
7.					
9.					
10.					

SUBSTITUTIONS AND "OR EQUAL"

The above signed as Bidder agrees that substitutions or "or equal" items will not be considered until after the "Effective Date of the Agreement" and will be evaluated in accordance with Paragraphs 6.7, 6.7.1 and 6.7.2, of the General Conditions as amended by the Supplementary Conditions. If Bidder intends to propose substitutions or "or equal" items after the "Effective Date of the Agreement", it is agreed that these items will be listed on the Substitution List included with the Bid (form provided herein). Only the proposed substitutions or "or equal" items listed on the Substitution List will be evaluated by the Engineer in accordance with the General Conditions.

QUESTIONNAIRE FORM
(SECTION 00301)

DATE: 3-14-2013

PROJECT IDENTIFICATION City of Deltona – Public Works Division
TIPTON DRIVE IMPROVEMENTS

NAME OF BIDDER: Crossroads Site Development & Underground Utilities LLC

BUSINESS ADDRESS: 284 Suite B Hand Ave Ormond Beach Fl, 32174

TELEPHONE NO: 386-672-4200

CONTRACTOR'S FLORIDA LICENSE NO: CGC 1516858 CUC 1224346

The signed bidder warrants the truth and accuracy of all statements and answers herein contained. Include additional sheets if necessary.

1. How many years has your organization been in business as a General Contractor? 7

2. Have you ever failed to complete work awarded to you? If so, where and why?
   no

3. Name three (3) municipalities or government entities for which you have performed similar projects as this one and to which you refer?
   See Attached

4. Have you personally inspected the site of the proposed Work? Describe any anticipate problems with the site and your proposed solutions. Yes None

5. Will you Subcontract any part of this Work? If so, describe which portion(s).
   Sod - Barricades - Asbuilts

6. What equipment do you own that is available for the Work? (attach additional sheets if necessary)
See Atached

7. What equipment will you purchase for the Work?
none

8. What equipment will you rent for the Work?
None

9. The following is given as a summary of the Financial Statement of the undersigned: (List Assets and Liabilities and use insert sheet if necessary.)
Upon Award

10. State the true and exact, correct, and complete name under which you do business.
Bidder is: **Crossroads Site Development & Underground Utilities LLC**

SUB-CONTRACTORS AND AFFILIATES FORM
(SECTION 00301A)

The following are a list of Sub Contractors or Affiliates that will be utilized in this project. Use additional sheets if necessary.

1. Firm Name: D & W Paving
   Trade: Paving
   Firm Owner: Chris Durrance
   Firm Address: Holly Hill Florida
   Firm Phone Number: 258-5440

2. Firm Name: Bonnies Barricades WBE
   Trade: Barricades
   Firm Owner: Bonnie Marsh
   Firm Address: Ormond Beach
   Firm Phone Number: _____

3. Firm Name: _____
   Trade: _____
   Firm Owner: _____
   Firm Address: _____
   Firm Phone Number: _____

4. Firm Name: _____
   Trade: _____
   Firm Owner: _____
   Firm Address: _____
   Firm Phone Number: _____

5. Firm Name: _____
   Trade: _____
   Firm Owner: _____
   Firm Address: _____
   Firm Phone Number: _____

REFERENCES FORM
(SECTION 00301B)

The City of Deltona is seeking Contractors who have proven past, positive experiences in projects of similar and same size of scope of work. These references are required with your submittals. References shall contain the Owners contact information for the projects referenced. References with another Contractor listed as the Owner shall not be accepted. Contractors not having past, positive experiences in projects of similar and same size of scope of work, as the Prime Contractor, will not be considered. References which are located in foreign countries are not acceptable.

1. Project Name: SEE Attached Sheets
   Project Value: _____
   Project Description: _____
   Project Owner: _____
   Owner contact information: _____
   Project Location: _____
   Project Start and End Dates: _____

2. Project Name: _____
   Project Value: _____
   Project Description: _____
   Project Owner: _____
   Owner contact information: _____
   Project Location: _____
   Project Start and End Dates: _____

3. Project Name: _____
   Project Value: _____
   Project Description: _____
   Project Owner: _____
   Owner contact information: _____
   Project Location: _____
   Project Start and End Dates: _____

4. Project Name: _____
   Project Value: _____
   Project Description: _____
   Project Owner: _____
   Owner contact information: _____
   Project Location: _____
   Project Start and End Dates: _____

STATE OF FLORIDA
DEPARTMENT OF BUSINESS AND PROFESSIONAL REGULATION

CONSTRUCTION INDUSTRY LICENSING BOARD (850) 487-1395
1940 NORTH MONROE STREET
TALLAHASSEE FL 32399-0783

LORENZO, WILLIAM JOHN
CROSSROADS SITE DEVELOPMENT AND UNDERGROUND UTILITIES LLC
96 DRIFTWOOD AVE
ORMOND BEACH FL 32176

Congratulations! With this license you become one of the nearly one million Floridians licensed by the Department of Business and Professional Regulation. Our professionals and businesses range from architects to yacht brokers, from boxers to barbeque restaurants, and they keep Florida's economy strong.

Every day we work to improve the way we do business in order to serve you better. For information about our services, please log onto **www.myfloridalicense.com**. There you can find more information about our divisions and the regulations that impact you, subscribe to department newsletters and learn more about the Department's initiatives.

Our mission at the Department is: License Efficiently, Regulate Fairly. We constantly strive to serve you better so that you can serve your customers. Thank you for doing business in Florida, and congratulations on your new license!

STATE OF FLORIDA AC# 6234021
DEPARTMENT OF BUSINESS AND PROFESSIONAL REGULATION

CUC1224346 07/30/12 120044789

CERT UNDERGROUND & EXCAV CNTR
LORENZO, WILLIAM JOHN
CROSSROADS SITE DEVELOPMENT AND

IS CERTIFIED under the provisions of Ch.489 FS
Expiration date: AUG 31, 2014 L12073001606

DETACH HERE

THIS DOCUMENT HAS A COLORED BACKGROUND • MICROPRINTING • LINEMARK™ PATENTED PAPER

AC# 6234021

STATE OF FLORIDA
DEPARTMENT OF BUSINESS AND PROFESSIONAL REGULATION
CONSTRUCTION INDUSTRY LICENSING BOARD

SEQ# L12073001606

DATE	BATCH NUMBER	LICENSE NBR
07/30/2012	120044789	CUC1224346

The UNDERGROUND UTILITY & EXCAVATION CO
Named below IS CERTIFIED
Under the provisions of Chapter 489 FS.
Expiration date: AUG 31, 2014

LORENZO, WILLIAM JOHN
CROSSROADS SITE DEVELOPMENT AND UNDERGROUND UTILITIES LLC
96 DRIFTWOOD AVE
ORMOND BEACH FL 32176

RICK SCOTT
GOVERNOR

KEN LAWSON
SECRETARY

DISPLAY AS REQUIRED BY LAW

STATE OF FLORIDA
DEPARTMENT OF BUSINESS AND PROFESSIONAL REGULATION

CONSTRUCTION INDUSTRY LICENSING BOARD (850) 487-1395
1940 NORTH MONROE STREET
TALLAHASSEE FL 32399-0783

LORENZO, WILLIAM JOHN
CROSSROADS SITE DEVELOPMENT AND UNDERGROUND UTILITIES LLC
96 DRIFTWOOD AVE
ORMOND BEACH FL 32176

Congratulations! With this license you become one of the nearly one million Floridians licensed by the Department of Business and Professional Regulation. Our professionals and businesses range from architects to yacht brokers, from boxers to barbeque restaurants, and they keep Florida's economy strong.

Every day we work to improve the way we do business in order to serve you better. For information about our services, please log onto **www.myfloridalicense.com**. There you can find more information about our divisions and the regulations that impact you, subscribe to department newsletters and learn more about the Department's initiatives.

Our mission at the Department is: License Efficiently, Regulate Fairly. We constantly strive to serve you better so that you can serve your customers. Thank you for doing business in Florida, and congratulations on your new license!

AC# 6233875

STATE OF FLORIDA
DEPARTMENT OF BUSINESS AND PROFESSIONAL REGULATION

CGC1516858 07/30/12 120044620

CERTIFIED GENERAL CONTRACTOR
LORENZO, WILLIAM JOHN
CROSSROADS SITE DEVELOPMENT AND

IS CERTIFIED under the provisions of Ch.489 FS
Expiration date: AUG 31, 2014 L12073001460

DETACH HERE

THIS DOCUMENT HAS A COLORED BACKGROUND - MICROPRINTING - LINEMARK™ PATENTED PAPER

AC# 6233875

STATE OF FLORIDA
DEPARTMENT OF BUSINESS AND PROFESSIONAL REGULATION
CONSTRUCTION INDUSTRY LICENSING BOARD

SEQ# L12073001460

DATE	BATCH NUMBER	LICENSE NBR
07/30/2012	120044620	CGC1516858

The GENERAL CONTRACTOR
Named below IS CERTIFIED
Under the provisions of Chapter 489 FS.
Expiration date: AUG 31, 2014

LORENZO, WILLIAM JOHN
CROSSROADS SITE DEVELOPMENT AND UNDERGROUND UTILITIES LLC
284 HAND AVE SUITE B
ORMOND BEACH FL 32174

RICK SCOTT
GOVERNOR

KEN LAWSON
SECRETARY

DISPLAY AS REQUIRED BY LAW

Crossroads Site Development & Underground Utilities, LLC

Work Experience

Owner / General Contractor	Address	Phone	Project & Type of Work	Location	Approx. Price	Year
B & B Underground Contractors **Attn: Steven Decker** Owner: City of Palm Coast	6900 Dwight Road West Palm Beach, FL 33411	561-204-9335	Robert's Road & Sea Ray Drive sidewalk removal and replacement fine grade & restore right of way Construct 8" Master meter with bypass	Palm Coast , FL	**$70,000**	2007
B & B Underground Contractors **Attn: Steven Decker** Owner: County of St. Lucie	6900 Dwight Road West Palm Beach, FL 33411	561-204-9335	Indian River Estates Potable Water install 16,500' of 8" water main install 27,500 of 6" water main installed approx. 64 fire hydrants with new water services all work done with flaggers and lane closure	Port St. Lucie, FL	**$215,630** **Labor Only**	2007
D & W Paving **Attn: Clay Durrance**	308 Sunset Ave Holly Hill, FL 32115	386-258-5440	Coconut's Carwash Site grading & parking lot construction	Palm Coast, FL	**$15,500** **Labor Only**	2007
D & W Paving **Attn: Clay Durrance**	308 Sunset Ave Holly Hill, FL 32115	386-258-5440	Riverside Bank Site grading & parking lot construction	Deltona, FL	**$9,500** **Labor Only**	2007
D & W Paving **Attn: Clay Durrance** Owner: City of South Daytona	308 Sunset Ave Holly Hill, FL 32115	386-258-5440	Steven's Pond Finish grade site	Daytona Beach, FL	**$2,000** **Labor Only**	2007
D & W Paving **Attn: Clay Durrance**	308 Sunset Ave Holly Hill, FL 32115	386-258-5440	Crossroads Church Site grading & parking lot construction	Port Orange, FL	**$5,600** **Labor Only**	2007
D & W Paving **Attn: Clay Durrance** Owner: City of Daytona Beach	308 Sunset Ave Holly Hill, FL 32115	386-258-5440	Cypress Street Park Site grading & parking lot construction	Daytona Beach, FL	**$5,600** **Labor Only**	2007
D & W Paving **Attn: Clay Durrance** Owner: Neighbors Ice Cream	308 Sunset Ave Holly Hill, FL 32115	386-258-5440	Neighbors Ice Cream Storm drainage, sewer, potable water	Port Orange, FL	**$ 25,000.00**	2008
D & W Paving **Attn: Clay Durrance** Owner: New Port Orange Police Station	308 Sunset Ave Holly Hill, FL 32115	386-258-5440	Port Orange Police Station Storm drainage	Port Orange, FL	**$ 150,000.00**	2008
R.F. Concrete Construction **Attn: Ron Foulks - V.P.**	664 Old Dixie Highway Vero Beach, FL 32962	772-567-3356	Pepsi Distribution Center site grading & parking lot construction	Daytona Beach, FL	**$15,000 ytd**	2008

Continuation - Work Experience

Crossroads Site Development & Underground Utilities, LLC

The City of Oviedo **Attn: Sofia Liatsos**	400 Alexandria Blvd Oviedo, FL 32765	407-971-5647	Garden Grove Water Main Water main removal & replacement Roadway removal & replacement for water main replacement(open cut) hydrants(water services)	Oviedo, FL	**$ 106,000.00**	2008
Saboungi Construction Inc. **Attn: Mounir**	290 N Highway U.S. 1 Ormond Beach, FL 32174	386-672-2077	Coraci Sports Park Site Development & Underground Util Pond excavation- 8" Water-main	Port Orange, FL	**$ 825,000.00**	2008
City of Port Orange Inspector **Attn: Luther W. Davidson** Commercial Building Inspector ICC Certificate # 5256398-B2 ***Quentin L. Hampton Associates, Inc.***		386-852-3065	140,000cy fill placement Storm drain -roadway and parking lot 2 complete ball fields			
Summerhaven Prof. Centre **Cotter Ryan Commercial**	410 Summerhaven Drive Debary, FL 32720		Summerhaven Prof. Centre site grading - exfiltration system - lift station- forcemain - sewer directional drilling -base- paving- curb	Debary, FL	**$ 255,000.00**	2009
The City of Altamonte Springs **Attn: Jim Wickert**	225 Newburryport Ave. Altamonte Sprgs,FL 32701	407-571-8560	Fire hydrant replacement directional drilling - water services open-cut- back flow preventers	Altamonte Spgs	**$ 79,000.00**	2009
The City of Winter Garden **Attn: Nicolle Van Valkenburg** City Engineer	300 West Plant Street Winter Garden FL 34787	407-656-4111	Interconnection between 12" Reuse Main, Directional Drills, Wet Taps, Roadway open cut-repair	Winter Garden	**$ 84,000.00**	2009
The City of Holly Hill **Attn: Chris Hurst**	1065 Ridgewood Ave. Holly Hill, FL 32117	386-248-9441	Storm drain - construct swales	Holly Hill	**$ 25,000.00**	2009
Sunrise Elementary A.M. Weigel 200 Magnolia Ave. Daytona Beach, FL 32114 **Attn: Dwight Pickett**	3155 Phonetia Drive Deltona, FL	386-257-6691	Removal and replacement of unsuitable material - storm drain water, sewer, site grading, paving, fireline	Deltona	**$ 270,000.00**	2010
The City of Bunnell **Attn: Bill Green**	1769 East Moody Blvd Bunnell, FL 32110	386-586-5159	concrete ditch paving -slope stabilization- roadway removal and replacement with new headwalls with new storm drain at existing canal-bypass pumping	Bunnell	**$ 138,000.00**	2010
The City of Daytona Beach	125 Basin street Ste 130	386-671-8813	Directional Drills, Roadway open cut-repair Water Service Replacement	Daytona Beach	**$ 95,575.00**	201

Attn: Frank Van Pelt	Daytona Beach FL 32114		Replace Existing water services Directional Drills, Roadway open cut-repair			
The City of Daytona Beach **Attn: Jim Nelson** Joint Venture w/ Truant Construction	P.O. Box 2451 Daytona Beach FL 32115	386-671-8613	Old Daytona Historic Neighborhood Streetscape 16"-24" force mains, valves, tie-ins 6"-12" water and reuse mains, wet-taps, line-stops, storm drain, hand formed conflict boxes paving, irrigation, curb, stamped concrete, colored concrete	Daytona Beach	**$ 402,000.00**	2011
The City of Bunnell **Attn: Bill Green**	1769 East Moody Blvd Bunnell, FL 32110	386-586-5159	S Railroad Street Remove 540' of failing asphalt and base Replace with new base and asphalt Grade and sod existing washouts on ditch	Bunnell	**$ 18,440.00**	2011
Quentin L Hampton Associates **Attn: Andrew Giannini P.E.** Project Manager	4401 Eastport Parkway Port Orange Florida 32129	386-761-6810	North and South Turn Beach Improvements Remove and install new concrete beach approach Remove and install new concrete sidewalks Install new pavers and retaining wall Install new flag poles and monuments	Ponce Inlet	**$ 103,000.00**	2011
Pero Properties, LLC **Attn: Edwin D. Davis, II, P.A.**	2450 South Palmetto Ave. South Daytona, FL 32119 (5 Unit Apartment Complex)	386-672-1711	Construct enclosure to meet with City specs Remove and replace roof Paint structure Renovated interior to include removal and install bathroom, kitchen and flooring Update parking	South Daytona	**$ 45,000.00**	2011
B & B Underground Contractors **Attn: Steven Decker** **(B-B Prime Contractor)**	6900 Dwight Road West Palm Beach, Fl 33411	561-204-9335	Spring Lake Forcemain Remove 2000' of 16" DIP Forcemain Install 2000' of 24" DR-18 Forcemain & Fittings & 24" Plug Valve & Air Release Vault Roadway open cut-repair	Altamonte Springs	**$80,000** **LABOR ONLY**	2012
City of Palm Coast **Attn: Mary Kroneberg** Project Manager	2 Utility Drive Palm Coast, FL 32137	386-986-2306	Roberts Road Forcemain Install 1200' of 8" DR-18 Forcemain 10" HDPE Directional Drills 8" Plug Valve & Air Release Vault	Palm Coast	**$ 53,575.00**	2012
City of Ormond Beach **Attn: James Davis** Project Manager	501 N. Orchard Street Ormond Beach FL, 32174	386-676-3574	Remove and Replace 24" Gate Valve at Water Treatment Plant	Ormond Beach	**$ 4,000.00** **LABOR ONLY**	2012

City of Mt Dora Attn: Gus Gianikas Project Manager	510 N. Baker Street Mount Dora FL, 32757	352-735-7112 Ext. 1705	Donnelly Street Parking Garage Modification Demo Existing Wall & Structures Install new Concrete Retaining Wall Install new Storm Drain & Retention Pond Install new Sewer Main & Concerte Curb Install new Base & Paving	Mt. Dora	$ 161,000.00	2012

July 24, 2008

Your Prompt Response is Appreciated

Appropriate Individual JOHN CARAWAY
Obligee Company or Agency CITY OF OVIEDO, FLORIDA
Address 400 ALEXANDRIA BLVD.
City, State Zip OVIEDO, FL 32765

FAX: 503.684.4066
EMAIL: IDGSI@INSCODICO.COM
ENCLOSED RETURN ENVELOPE

Re: Principal/Contractor CROSSROADS SITE DEVELOPMENT
Project: Job Description GARDEN GROVE WATE MAIN REPLACEMENT
Contract No.: 080467
Bond #: 58268110 [redacted]
Original Contract Price: $ 96,975

Without prejudicing your rights or affecting our liability under the bond described above, we would appreciate your response on the referenced project.

Thank you for your assistance.

1) **GENERAL CONTRACT PERFORMANCE**
   A) Is the Contractor well organized? YES
   B) Is the Contractor cooperative and business-like? YES
   C) Are Subcontractors well qualified? YES
   D) Describe the quality of workmanship: EXCELLENT

2) **IF THE CONTRACT IS COMPLETE,** please advise:
   A) Approximate acceptance date: _____
   B) Final contract price: $ 106,775

3) **IF THE CONTRACT IS NOT COMPLETE,** please advise:
   A) Approximate percentage or dollar amount of contract completed or delivered to date: 100% OF BASE CONTRACT *
   B) Is the project on schedule? YES
   C) Anticipated completion date: 07/28/08
   D) Are there any unpaid bills for labor or material? NONE THAT WE ARE AWARE OF
   E) Have any stop notices or liens been filed? NO
   F) Are there any significant Change Orders? ONE If so, Amount? $ 9,800

4) **COMMENTS** * CONTRACTOR HAS COMPLETED BASE CONTRACT WORK & IS CURRENTLY COMPLETING ADDITIONAL WORK FOR THE CITY. CONTRACTOR HAS BEEN EXCEPTIONALLY ATTENTIVE TO THE NEEDS OF THE CITY & RESIDENTS

By: [signature] Date: 07/25/08
Name & Title: JOHN CARAWAY CITY OF OVIEDO CAPITAL PROJECTS MANAGER Phone: (407) 971-5647
Email: JCARAWAY@CITYOFOVIEDO.NET Fax: (407) 971-5822

CITY OF PORT ORANGE

COMMUNITY DEVELOPMENT
1000 CITY CENTER CIRCLE
PORT ORANGE, FLORIDA 32129
TELEPHONE 386-506-5600
FAX 386-506-5699
www.Port-Orange

November 19, 2008

Crossroads Site Development & Underground Utilities, LLC

Subject: Performance of Crossroads Site development & Underground Utilities
Acting as subcontractor on the Coraci Sports Park construction project
Under construction from March to November 2008.

To Whom It May Concern:

At the request of Crossroads LLC I am providing an evaluation of their performance on this project.

General Contract Performance:
Crossroads was organized, business like, cooperative and preformed high quality work.
This project is substantially complete and was completed on schedule.
The contract value is approximately $1.4 million including change orders.

It has been a pleasure working with Crossroads on this project and I would recommend them for future work.

Sincerely,

Michael H. Hill
Community Development Engineer
City of Port Orange
(386) 506-5660
mhill@port-orange.org

520 Palm Coast Parkway SW
Palm Coast, Florida 32137

Phone: 386.445.6569
Fax: 386.447-8991

www.cphengineers.com

April 11, 2012

Mr. Brian Rothwell
Purchasing Manager
City of Palm Coast
160 Cypress Point Parkway, Suite B106
Palm Coast, FL 32164

Re: Construction of the Roberts Road Force Main Extension
ITB-PW-U-12-06
CPH Job No. P61205

Dear Brian:

Bids were received for the Construction of the Roberts Road Force Main Extension Project on April 4, 2012.

Crossroads Site Development & Underground Utilities, LLC (CSDU) of Ormond Beach, Florida, submitted the low base bid of $53,593.00.

The bids that were submitted ranged from the low bid of $53,593.00 to a high of 116,753.50.

CSDU is the General Contractor and will be responsible for Construction of the Roberts Road Force Main Extension. A large share of the previous construction experience of CSDU has been in the area of underground utilities. We have not worked with CSDU on any projects, but we contacted some of the references they provided, and received very favorable comments and recommendations.

Based on the responses received from the references, it is recommended that the base bid of $53,593.00 be accepted, and that an award be made to Crossroads Site Development & Underground Utilities, LLC.

All of the required permits for this project have been received.

Please contact CPH if you have any questions or would like to discuss our recommendation.

Sincerely,

CPH Engineers, Inc.

Marcus Crosby

Marcus Crosby
Project Manager

Copy: Richard Adams
Steve Flanagan
Mary Kronenberg
David Klages

BESH
BOOTH ERN STRAUGHAN HIOTT

VIA EMAIL & U.S. MAIL

August 20, 2012

Mr. John Bruce
CITY OF MOUNT DORA
1250 North Highland Street
Mount Dora, Florida 32757

RE: **DONNELLY STREET PARKING GARAGE MODIFICATIONS**
BID RECOMMENDATION (BESH #881445.0120)

Dear Mr. Bruce:

We are in receipt of the bids for the above referenced project, which were opened at 2:00 p.m. on Thursday, August 16, 2012. We have reviewed the bid packages for completeness and accuracy, and have checked references and bid requirements for the apparent low bidder. The results of the bid opening, in order of bid price, are as follows:

1.	Crossroads Site Development & Underground Utilities, LLC	$	207,940.00
2.	Pillar Construction Group, LLC	$	238,723.90
3.	American Persian Engineers & Constructors, Inc.	$	253,395.85

Based upon our review of the bids and positive references from previous clients and consultants, we would recommend approval of the bid provided by the low bidder Crossroads Site Development & Underground Utilities, LLC, in the amount of $207,940.00.

Should you have any questions with regards to this matter, please feel free to contact our office.

Sincerely,

BOOTH, ERN, STRAUGHAN & HIOTT, INC.

Robert A. Ern, Jr., P.E.
Vice-President/Principal
rern@besandh.com

RAE\sd

c: Gus Gianikas, City of Mount Dora (via e-mail)

H:\stacey\WordPerfect\Rob\City of Mount Dora\Donnelly St Parking Garage Mod - Ph 1 - 921083.0120\Bid Documents\Recommendation Letter 08-20-12.wpd

ENGINEERS ♦ SURVEYORS ♦ LAND PLANNERS
350 North Sinclair Avenue ♦ Tavares, Florida 32778
Phone: 352.343.8481 ♦ Fax: 352.343.8495
E-Mail: info@besandh.com ♦ www.besandh.com

CORPORATE RESOLUTION FORM
(SECTION 00420)

I, TAYLOR LORENZO, Secretary of CROSSROADS SITE DEVELOPMENT, a corporation organized and existing under the laws of the State of FLORIDA, hereby certify that at a meeting of the Board of Directors of the Corporation duly called and held on MARCH 4, 2013 at which a quorum was present and acting throughout, the following resolutions were adopted and are now in full force effect:

RESOLVED that the following individuals of this corporation are authorized to execute on behalf of this corporation A Bid and Agreement to _____ for the construction of _____ _____.

I further certify that the names of the officers of this corporation and any other persons authorized to act under this resolution and their official signatures are as follows:

NAME	OFFICE	OFFICIAL SIGNATURE
WILLIAM J LORENZO	V.P	
DAVID J. PATTERSON	PRES.	

IN WITNESS THEREOF, I have hereunto subscribed my name as Secretary and affixed the seal of the corporation this 4 day of MARCH, 2013

HOLD HARMLESS AND INDEMNITY AGREEMENT
(SECTION 00430)

William J Lorenzo, agrees through the signing of this document by an authorized party or agent that it shall defend, indemnify and hold harmless the City of Deltona, and its agents, employees, and public officials from and against all suits, losses, claims, demands, judgments of every name and description arising out of or incidental to the performance of this contract or work performed thereunder, whether or not due to or caused by the negligence of the City of Deltona, its agents, employees, and public officials excluding only the sole negligence of the City of Deltona, its agents, employees, and Public Officials.

This provision shall also pertain to any claims brought against the City of Deltona, its agents, employees, and public officials by an employee of the named Contractor, any Sub-contractor, or anyone directly or indirectly employed by any of them.

The Contractor's obligation to indemnify the City of Deltona, its agents, employees and public officials under this provision shall be limited to $1,000,000 per occurrence which the parties agree bears a reasonable commercial relationship to the contract.

The Contractor agrees to accept, and acknowledges as adequate remunerations, the consideration of $10, which is part of the agreed bid price, the promises contained herein, and other good and valuable consideration, the receipt of which is hereby acknowledged, for agreement to enter into this Hold Harmless and Indemnity Agreement.

Crossroads Site Development & Underground Utilities, LLC

William J Lorenzo

CONTRACTOR

3-5-12

DATE

DRUG-FREE WORKPLACE FORM
(SECTION 00440)

The undersigned Bidder in accordance with Florida Statute 287.087, hereby certifies that **Crossroads Site Development & Underground Utilities LLC** does:
(*Name of Business*)

1. Publish a statement notifying employees that the unlawful manufacture, distribution, dispensing, possession, or use of a controlled substance is prohibited in the workplace and specifying the actions that will be taken against employees for violations of such prohibition.

2. Inform employees about the dangers of drug abuse in the workplace, the business's policy of maintaining a drug-free workplace, any available drug counseling, rehabilitation, and employee assistance programs, and the penalties that may be imposed upon employees for drug abuse violations.

3. Give each employee engaged in providing the commodities or contractual services that are proposed a copy of the statement specified in subsection (1).

4. In the statement specified in subsection (1), notify the employees that, as a condition of working on the commodities or contractual services that are under bid, the employee will abide by the terms of the statement and will notify the employer of any conviction of, or plea of guilty or nolo contendere to, any violation of Chapter 893 or of any controlled substance law of the United States or any state, for a violation occurring in the workplace no later than five (5) days after such conviction.

5. Impose a sanction on, or require the satisfactory participation in a drug abuse assistance or rehabilitation program if such is available in the employee's community, by any employee who is so convicted.

6. Make a good faith effort to continue to maintain a drug-free workplace through implementation of this section.

As the person authorized to sign the statement, I certify that this firm complies fully with the above requirements.

X _____
Bidder's Signature

3-14-2013
_____
Date

PROPOSER'S CERTIFICATION FORM
(SECTION 00460)

I have carefully examined the Request for Proposal, Instructions to Proposers, General and/or Special Conditions, Vendor's Notes, Specifications, proposed agreement and any other documents accompanying or made a part of this Request for Proposal.

I hereby propose to furnish the goods or services specified in the Request for Proposal at the prices and rates quoted in my Proposal. I agree that my Proposal will remain firm for a period of up to one hundred twenty (120) days in order to allow the City adequate time to evaluate the Proposal.

I agree to abide by all conditions of the Proposal and understand that a background investigation may be conducted by the City of Deltona prior to award.

I certify that all information contained in this Proposal is truthful to the best of my knowledge and belief. I further certify that I am a duly authorized to submit this Proposal on behalf of the vendor / contractor as its act and deed and that the vendor / contractor is ready, willing and able to perform if awarded the contract.

I further certify, under oath, that this Proposal is made without prior understanding, agreement, connection, discussion, or collusion with any other person, firm or corporation submitting a Proposal for the same product or service; no officer, employee or agent of the City of Deltona Government or of any other Proposer interested in said Proposal; and that the undersigned executed this Proposer's Certification with full knowledge and understanding of the matters therein contained and was duly authorized to do so.

Name of Business

By: _____
Signature

DAVID J. PATTERSON - PRES
Name & Title, Typed or Printed

284 HAND AVE. SUITE B
Mailing Address

ORMOND BEACH, FL 32174
City, State, Zip Code

386 672-4200
Telephone Number

Sworn to and subscribed before me

This 4 day of

MARCH, 20 13

Taylor Alexis Marsh Lorenzo
Signature of Notary

Notary Public, State of FL

Personally known
-OR-
Produced Identification _____

TAYLOR ALEXIS MARSH LORENZO
Notary Public - State of Florida
My Comm. Expires Jul 12 2014
Commission # DD 973276

SWORN STATEMENT UNDER SECTION 287.133(3)(A), FLORIDA STATUTES, ON PUBLIC ENTITY CRIMES (SECTION 00470)

THIS FORM MUST BE SIGNED IN THE PRESENCE OF A NOTARY PUBLIC OR OTHER OFFICER AUTHORIZED TO ADMINISTER OATHS.

This sworn statement is submitted to the City of Deltona by **William J Lorenzo**
(Individual's name and title)

For **Crossroads Site Development & Underground Utilities LLC**
(Name of entity submitting sworn statement)

Whose business address is **284 Suite B Hand Ave Ormond Beach Fl 32174**

And (if applicable) its Federal Employer Identification Number (FEIN) is **26-0386699**
(if the entity has no FEIN, include the Social Security Number of the individual signing this sworn statement)

1. I understand that a "public entity crime" as defined in Section 287.133(1)(g), Florida Statutes, means a violation of any State or Federal law by a person with respect to and directly related to the transaction of business with any public entity or with an agency or political subdivision of any other state or with the United States, including, but not limited to, any bid or contract for goods or services to be provided to any public entity or an agency or political subdivision of any other state or a of the United States and involving antitrust, fraud, theft, bribery, collusion, racketeering, conspiracy, or material misrepresentation.

11. I understand that "convicted" or "conviction" as defined in Paragraph 287.133(1)(b), Florida Statutes, means a finding of guilt or a conviction of a public entity crimes, with or without an adjudication of guilt, in any Federal or State trial court of record relating to charges brought by indictment or information after July 1, 1989, as a result of a jury verdict, non-jury trial, or entry of a plea of guilty or nolo contendere.

12. I understand that an "affiliate' as defined in Section 287.133(1)(a), Florida Statutes, means:

    A predecessor or successor of a person convicted of a public entity crime: or an entity under the control of any natural person who is active in the management of the entity and how has been convicted of a public entity crime. The term "affiliate" includes those officers, directors, executives, partners, shareholders, employees, members, and agents who are active in the management of an affiliate. The ownership by one (1) person of shares constituting a controlling interest in another person, or a pooling of equipment or income among persons when not for fair market value under an arm's length agreement, shall be a prima facie case that one person controls another person. A person who knowingly enters into a joint venture with a person who has been convicted of a public entity crime in Florida during the preceding thirty-six (36) months shall be considered an affiliate.

13. I understand that a "person" as defined in Section 287.133(1)(e), Florida Statutes, means any natural person or entity organized under the laws of any state or of the United States with the legal power to enter into a binding contract and which bids or applies to bid on contracts for the provision of goods or services let by a public entity, or which otherwise transacts or applies to transact business with a public entity. The term "person" includes those officers, directors, executives, partners, shareholders employees, members, and agents who are active in management of an entity.

14. Based on information and belief, the statement which I have marked below is true in relation to the entity submitting this sworn statement. (You must indicate which statement applies.)

(SECTION 00470 Continued)

x Neither the entity submitting this sworn statement, nor any officers, directors, executives, partners, shareholders, employees, members, or agent who is active in management of the entity, nor the affiliate of the entity has been charged with and convicted of a public entity crime subsequent to July 1, 1989.

_____ The entity submitting this sworn statement, or one or more of the officers, directors, executives, partners, shareholders, employees, members or agent who are active in management of the entity, or an affiliate of the entity, has been charged with and convicted of a public entity crime subsequent to July 1, 1989.

_____ The entity submitting this sworn statement, or one or more of the officers, directors, executives, partners, shareholders, employees, members or agents who are active in management of the entity, or an affiliate of the entity, has been charged with and convicted of a public entity crime subsequent to July 1, 1989. However, there has been a subsequent proceeding before an Administrative Law Jury of the State of Florida, Division of Administrative Hearings and the Final Order entered by the Administrative Law Jury determined that it was not in the public interest to place the entity submitting this sworn statement on the convicted vendor list. (You must attach a copy of the final order).

I UNDERSTAND THAT THE SUBMISSION OF THIS FORM TO THE CITY OF DELTONA IS FOR THE CITY ONLY AND, THAT THIS FORM IS VALID THROUGH DECEMBER 31, OF THE CALENDAR YEAR IN WHICH IT IS FILED. I ALSO UNDERSTAND THAT I AM REQUIRED TO INFORM THE CITY PRIOR TO ENTERING IN TO A CONTRACT IN EXCESS OF THE THRESHOLD AMOUNT PROVIDED IN SECTION 287.017, FLORIDA STATUTES, FOR CATEGORY TWO OF ANY CHANGE IN THE INFORMATION CONTAINED IN THIS FORM.

SIGNATURE

3-4-13

DATE

State of FLORIDA
County of VOLUSIA

Personally appeared before me, the undersigned authority, DAVID J. PATTERSON (name of individual signing) who, after first being sworn by me, affixed his/her signature in the space provided above on the 4 day of MARCH, 2013.

NOTARY PUBLIC

My commission expires:

TAYLOR ALEXIS MARSH LORENZO
Notary Public - State of Florida
My Comm. Expires Jul 12, 2014
Commission # DD 973276

NON COLLUSION AFFIDAVIT FORM
(SECTION 00480)

STATE OF FLORIDA

COUNTY OF VOLUSIA

DAVID J. PATTERSON, being first duly sworn deposes and says that:

i. He/She is the PRESIDENT, of CROSSROADS ..., the Bidder that has submitted the attached Bid;

ii. He/She is fully informed respecting the preparation and contents of the attached Bid and of all pertinent circumstances respecting such Bid;

iii. Such Bid is genuine and is not a collusive or sham Bid;

iv. Neither the said Bidder nor any of its officers, partners, owners, agents, representatives, employees, or parties in interest, including this affidavit, have in any way, colluded, conspired, connived or agreed, directly or indirectly, with any other Bidder, firm or person to submit a collusive or sham Bid in connection with the Contract for which the attached Bid has been submitted; or to refrain from bidding in connection with such Contract; or have in any manner, directly or indirectly, sought by agreement or collusion,, or communication, or conference with any Bidder, firm, or person to fix the price or prices in the attached Bid or of any other Bidder, or to fix any overhead, profit, or cost elements of the Bid price or the Bid price of any other Bidder, or to secure through any collusion, conspiracy, connivance, or unlawful agreement any advantage against (Recipient), or any person interested in the proposed Contract;

v. The price or prices quoted in the attached Bid are fair and proper and are not tainted by any collusion, conspiracy, connivance, or unlawful agreement on the part of the Bidder or any other of its agents, representatives, owners, employees or parties in interest, including this affidavit.

By _____

Sworn and subscribed to before me this 4 day of MARCH, 2013, in the State of FLORIDA, County of VOLUSIA.

Taylor Alexis Marsh Lorenzo
Notary Public

My Commission expires:

TAYLOR ALEXIS MARSH LORENZO
Notary Public - State of Florida
My Comm. Expires Jul 12, 2014
Commission # DD 973276

TRENCH SAFETY AFFIDAVIT FORM
(SECTION 00490)

(FAILURE TO COMPLETE THIS FORM MAY RESULT IN THE BID BEING DECLARED NON-RESPONSIVE)

Crossroads Site Development & Underground Utilities LLC (NAME OF CONTRACTOR) hereby provides written assurance that compliance with applicable Trench Safety Standards identified in the Occupational Safety & Health Administration's Excavation Safety Standards (OSHA) 29 C.F.R.S. 1926.650 Subpart P will be adhered to during trench excavation in accordance with Florida Statutes 553.60 through 533.64 inclusive (1990) "Trench Safety Act".

The specific methods of compliance with applicable Trench Safety Standards, and the associated cost of compliance (costs included in the Bid Price), are as follows (attach additional sheets if necessary):

Item and Safety Measure	Cost
Trench Box	$ **500-**
Simple Slope	$ **500-**
	$
	$
	$
	$
	$
TOTAL	$ **1000-**

By the signature of its undersigned authorized representatives, the Bidder hereby assures the CITY OF DELTONA that any such excavation performed by the Bidder will be performed in compliance with all applicable trench safety standards.

By _____

Sworn and subscribed to before me this 4 day of MARCH, 2013, in the State of FLORIDA, County of VOLUSIA.

_____ Notary Public

My Commission expires:

TAYLOR ALEXIS MARSH LORENZO
Notary Public - State of Florida
My Comm. Expires Jul 12, 2014
Commission # DD 973276

COPY

BID BOND FORM
(SECTION 00410)

BD133093

KNOWN ALL MEN BY THESE PRESENTS, that we, the undersigned, Crossroads Site Development & Underground Utilities, LLc as Principal, and Auto Owners Insurance Co Inc as Surety, are hereby held and firmly bound unto the City of Deltona, Florida as Owner in the penal sum of, (five percent 5%) of the Contract Bid Five-Percent for the payment of which, well and truly to be made, we hereby and severally bind ourselves, successors and assigns to pay Owner upon default of Bidder the penal sum set forth on the face of this Bond. Signed, this First day of March, 2013.

The condition of the above obligation is such that whereas the Principal has submitted to the City of Deltona, Florida a certain bid, attached hereto and hereby made a part hereof, to enter into a contract in writing, for the **TIPTON DRIVE IMPROVEMENTS.**

NOW THEREFORE,

1. Default of Bidder shall occur upon the failure of Bidder to deliver within the time required by the Bidding Documents the executed Agreement required by the Bidding Documents and any performance and payment bonds required by the Bidding Documents and Contract Documents.

2. This obligation shall be null and void if:

   2.1 Owner accepts Bidder's bid and Bidder delivers within the time required by the Bidding Documents (or an extension thereof agreed to in writing by Owner) the executed Agreement required by the Bidding Documents and any performance and payment bonds required by the Bidding Documents and Contract Documents, or

   2.2 All bids are rejected by Owner, or

   2.3 Owner fails to issue a notice of award to Bidder within the time specified in the Bidding Documents (or any extension thereof agreed to in writing by Bidder and, if applicable, consented to by Surety when required by paragraph 5 hereof).

3. Payment under this Bond will be due and Payable upon default of Bidder and within thirty (30) calendar days after receipt of Bidder and surety of written notice of default from Owner which notice will be given with reasonable promptness, identifying this Bond and the Project and including a statement of the amount due.

4. Surety waives notice of any and all defenses based on or arising out of any time extension to issue notice of award agreed to in writing by Owner and Bidder, providing that the time for issuing notice of award including extensions shall not in the aggregate exceed one hundred twenty (120) days from Bid Due without Surety's written consent.

5. No suite or action shall be commenced under this Bond prior to thirty (30) calendar days after the notice of default required in paragraph 3 above is received by Bidder and Surety, and in no case later than one year after Bid Due Date.

6. Any suite or action under this Bond shall be commenced only in a court of competent jurisdiction located in the state in which the Project is located.

7. Notice required hereunder shall be in writing and sent to Bidder and Surety at their respective addresses shown on the face of this Bond. Such notices may be sent by personal delivery, commercial courier or by United States Registered or Certified Mail, return receipt requested, postage pre-paid, and shall be deemed to be effective upon receipt by the part concerned.

8. Surety shall cause to be attached to this Bond a current and effective Power of Attorney evidencing the authority of the officer, agent or representative who executed this Bond on behalf of Surety to execute, seal and deliver such Bond and bind the Surety thereby.

9. This bond is intended to conform to all applicable statutory requirements. Any applicable requirement of any applicable statute that has been omitted from this Bond shall be deemed to be included herein as if set forth at length. If any provision of the Bond conflicts with any applicable provision of any applicable statute, then the provision of said statute shall govern and the remainder of the Bond that is not in conflict therewith shall continue in full force and effect.

10. The term "bid' as used herein includes a bid, offer or proposal as applicable.

IN WITNESS WHEREOF, the Principal and the Surety have hereunto set their hands and seals, and such of them as are corporations have caused their corporate seals to be hereto affixed and these presents to be signed by their proper officers, the day and year first set forth above.

Principal (Print Full Name):

WILLIAM J LORENZO

By: _____ (LS)

Title: V. P.

Attest: _____
Signature and Title

Surety (Print Full Name):

Auto Owners Insurance Company, Inc

Surety's Name and Corporate Seal

By: _____
Signature (attach power of attorney)

Title: Attorney In Fact

Attest: Rosa M. Grant-Account Manager
Signature and Title

March 1, 2013
(DATE)

IMPORTANT – Surety companies executing bonds must appear on the Treasury Department's most current list (Circular 570 as amended) and be authorized to transact business in the State of Florida.

DATE AND ATTACH TO ORIGINAL BOND

AUTO-OWNERS INSURANCE COMPANY

LANSING, MICHIGAN

POWER OF ATTORNEY

NO. BD133093

KNOW ALL MEN BY THESE PRESENTS: That the AUTO-OWNERS INSURANCE COMPANY AT LANSING, MICHIGAN, a Michigan Corporation, having its principal office at Lansing, County of Eaton, State of Michigan, adopted the following Resolution by the directors of the Company on January 27, 1971, to wit:

"RESOLVED, That the President or any Vice President or Secretary or Assistant Secretary of the Company shall have the power and authority to appoint Attorneys-in-fact, and to authorize them to execute on behalf of the Company, and attach the seal of the Company thereto, bonds and undertakings, recognizances, contracts of indemnity, and other writings obligatory in the nature thereof. Signatures of officers and seal of Company imprinted on such powers of attorney by facsimile shall have same force and effect as if manually affixed. Said officers may at any time remove and revoke the authority of any such appointee."

Does hereby constitute and appoint JAMES M SULLIVAN JR

its true and lawful attorney(s)-in-fact, to execute, seal and deliver for and on its behalf as surety, any and all bonds and undertakings, recognizances, contracts of indemnity and other writings obligatory in the nature thereof, and the execution of such instrument(s) shall be as binding upon the AUTO-OWNERS INSURANCE COMPANY AT LANSING, MICHIGAN as fully and amply, to all intents and purposes, as if the same had been duly executed and acknowledged by its regularly elected officers at its principal office.

IN WITNESS WHEREOF, the AUTO-OWNERS INSURANCE COMPANY AT LANSING, MICHIGAN, has caused this to be signed by its authorized officer this 2nd day of November, 2012.

Kenneth R. Schroeder — Senior Vice President

STATE OF MICHIGAN }ss.
COUNTY OF EATON

AMANDA LAMP NOTARY PUBLIC COUNTY OF EATON My Commission Expires JANUARY 1, 2014 Acting in the county of STATE OF MICHIGAN

On this 2nd day of November, 2012, before me personally came Kenneth R. Schroeder, to me known, who being duly sworn, did depose and say that they are Kenneth R. Schroeder, Senior Vice President of AUTO-OWNERS INSURANCE COMPANY, the corporation described in and which executed the above instrument, that they know the seal of said corporation, that the seal affixed to said instrument is such Corporate Seal, and that they received said instrument on behalf of the corporation by authority of their office pursuant to a Resolution of the Board of Directors of said corporation.

My commision expires January 1st, 2014.

Amanda Lamp — Notary Public

STATE OF MICHIGAN }ss.
COUNTY OF EATON

I, the undersigned First Vice President, Secretary and General Counsel of AUTO-OWNERS INSURANCE COMPANY, do hereby certify that the authority to issue a power of attorney as outlined in the above board of directors resolution remains in full force and effect as written and has not been revoked and the resolution as set forth are now in force.

Signed and sealed at Lansing, Michigan. Dated this 1st day of March, 2013

AUTO-OWNERS INSURANCE CO. Seal LANSING, MICH.

William F. Woodbury, First Vice President, Secretary and General Counsel

BIDDER'S CONTACT AND INFORMATION FORM
(SECTION 00110)

Bidder (Company) Name: **Crossroads Site Development & Underground Utilities LLC**	F. E. I. N. or SS Number: **26-0386699**
Mailing Address: **284 Suite B Hand Ave**	Street Address: **Same**
City, State, Zip: **Ormond Beach Fl, 32174**	City, State, Zip: **same**
Type of Entity: *(Circle one)* Corporation (Partnership Proprietorship Joint Venture	*I hereby certify that this bid is made without prior understanding, agreement, or connection with any corporation, firm, or person submitting a bid for the same materials, supplies or equipment, and is in all respects fair and without collusion or fraud. I agree to abide by all conditions of this bid and certify that I am authorized to sign this bid for the Bidder.* X _____ Authorized Signature (Manual)
Incorporated in the State of: **Florida** Year: **2007**	Typed or Printed Name: **William J Lorenzo**
Telephone Number: (**386**) **672-4200**	Title: **V.P.**
Fax Number: (**386**) **671-2687**	
Email contact info: **Crossroadsdu@aol.com**	

Question # 3 – What is the amount for the testing allowance??

Answer # 3 – The testing allowance is listed as $3,000.00.

The bid due date remains Wednesday, March 13, 2013 at 2:00 p.m. All prospective bidders are hereby instructed not to contact the Engineer of Record or any member of the City of Deltona Commission, City Manager, or City of Deltona Staff members other than the noted contact person regarding this Invitation to Bid or their bid proposal at any time during the solicitation or award process. Any such contact shall be cause for rejection of your bid proposal.

All inquiries are to be directed to the Purchasing Agent for the Public Works Division at the City of Deltona. Contact for this solicitation is: Brian Boehs, Purchasing Agent. Email address is bboehs@deltonafl.gov. Phone is 386-878-8955.

ALL OTHER SPECIFICATIONS AND CONDITIONS REMAIN UNCHANGED.

RECEIPT OF THIS ADDENDUM IS HEREBY ACKNOWLEDGED

Crossroads Site Development & Underground Utilities

NAME OF BUSINESS

BY: [illegible signature] 3-11-13

SIGNATURE/DATE

William Lorenzo V.P.

NAME & TITLE, TYPED OR PRINTED

789 Suite B Hand Ave

MAILING ADDRESS

Ormond Bch Fl 32174

CITY, STATE, ZIP CODE

SECTION 00300

BID RESPONSE FORM

Proposal of Crossroads Site Development & Underground Utilities LLC, hereinafter called "Bidder", a LLC doing business as Same as Above to the City of Deltona, Florida hereafter called "Owner". The Bidder, in compliance with the Owner's invitation for bids for the construction of:

City of Deltona

ITB #PW-13-06

TIPTON DRIVE IMPROVEMENTS

having examined the plans and specifications with related documents and the site of the proposed work, and being familiar with all of the conditions surrounding the construction of the proposed project including the availability of materials and labor, hereby proposes to furnish all labor, materials, and supplies; and to construct the project in accordance with the Contract Documents, within the time set forth herein, and at the prices stated below. These prices are to cover all expenses incurred in performing the work required under the Contract Documents, of which this proposal is a part.

Bidder accepts all of the terms and conditions of the Advertisement for Bids and General Conditions, Instructions, and Information for Bidders.

Bidder hereby agrees to commence work under contract on or before a date to be specified in a written "Notice to Proceed" of the Owner and to substantially complete the Project within 120 consecutive calendar days and to fully complete the Project within 150 consecutive calendar days thereafter as stipulated in the specifications. Bidder further agrees to pay any liquidated damages, as specified in the Agreement, for each consecutive calendar day thereafter.

Bidder has examined and carefully studied the Bidding Documents and the following addendum receipt of which is hereby acknowledged:

No. 1	Dated: 3-~~15~~ 8-13	No. _____	Dated: _____
No. _____	Dated: _____	No. _____	Dated: _____
No. _____	Dated: _____	No. _____	Dated: _____
No. _____	Dated: _____	No. _____	Dated: _____

BASE PROPOSAL: Bidder agrees to perform all of the work described in the specifications and shown on the plans for the sum shown in the schedule below:

Item No.	Description	Qty	Unit	Unit Price	Total Price
General Administrative					
1	Mobilization/Demobilization	1	LS	$ ---------	$ 10,000-
2	General Requirements, Bonds, Permits, etc.	1	LS	$ ---------	$ 8,535-
3	Indemnification	1	LS	$ ---------	$ 1,000-
4	Testing Allowance (Roadway and Pipe Compaction)	1	LS	$ ---------	$ 3,000-
Stormwater Sitework					
5	Layout and As-Built Survey	1	LS	$ ---------	$ 5,000-
6	Temporary Erosion Protection	1	LS	$ ---------	$ 3,000-
7	Maintenance of Traffic	1	LS	$ ---------	$ 5,000-
8	Clearing and Grubbing	1	LS	$ ---------	$ 6,900-
9	Site Grading	1	LS	$ ---------	$ 11,000-
10	Remove and Dispose Existing Drainage Inlets	4	EA	$ 1000-	$ 4,000-
11	Remove and Dispose Existing Drainage Culverts	225	LF	$ 45-	$ 10,125-
12	Remove and Replace Driveway	90	SY	$ 50-	$ 4,500-
13	Remove and Replace Pavement	550	SY	$ 55-	$ 27,500-
14	Furnish and Install 14" x 23" Elliptical RCP	55	LF	$ 84-	$ 4,620-
15	Furnish and Install 18" Reinforced Concrete Pipe	55	LF	$ 84-	$ 4,620-
16	Furnish and Install 36" Reinforced Concrete Pipe (<10-ft depth)	775	LF	$ 98-	$ 75,950-
17	Furnish and Install 36" Reinforced Concrete Pipe (>10-ft depth)	275	LF	$ 110-	$ 30,250-
18	Type "C" Inlet	3	EA	$ 2200-	$ 6,600-
19	Type "D" Inlet - 6-ft Alternate B	2	EA	$ 6500-	$ 13,000-
20	Type "J" Manhole - 6-ft Alternate A (<10-ft depth)	2	EA	$ 5000-	$ 10,000-
21	Type "J" Manhole - 6-ft Alternate A (>10-ft depth)	2	EA	$ 5800-	$ 11,600-
22	Modified Type "H" Outfall Structure	1	EA	$ 8500-	$ 8,500-
23	Furnish and Install 36" Headwall	1	EA	$ 7500-	$ 7,500-
24	Furnish and Install Rip Rap	110	SY	$ 80-	$ 8,800-
Water Main Conflict					
25	45º Bend (FLG.)	4	EA	$ 1000-	$ 4,000-
26	Furnish and Install PVC C900 Pipe (restrained joint)	35	LF	$ 200-	$ 7,000-
27	Remove and Replace Pavement Related to Water Main Conflict	40	SY	$ 100-	$ 4,000-
				TOTAL BASE BID	**$ 296,000-**

TOTAL BASE BID IN WORDS:

Two Hundred Ninty Six Thousand Dollars DOLLARS AND 0 /100 CENTS

The unit prices provided above shall include all labor, materials, bailing, shoring, removal, overhead, profit, insurance, etc., to cover the finished work of the several kinds required. Any changes to the Work after issuance of the Notice of Award shall be processed in accordance with Articles 10, 11, and 12 of the General Conditions (Section 00700) and Article 5 of the Agreement with the Owner.

Bidder understands that the Owner reserves the right to reject any or all bids and to waive any informalities in the bidding.

A bid security, attached in the sum of five (5) percent of the Total Bid Amount, is to become the property of the Owner in the event contract and bond are not executed within thirty (30) days of the Owner issuing a Notice of Award, as liquidated damages for the delay and additional expense to the Owner caused thereby.

Respectfully submitted:

By: **Crossroads Site Development & Underground Utilities LLC**
(Business Name)

(SEAL - if bid is by corporation)

284 Suite B Hand Ave
(Business Address)

Ormond Beach FL #2174
(Business City, State, Zip Code)

(Signature)

William Lorenzo
(Printed Name)

V.P.
(Title)

SUBSTITUTION LIST OF MANUFACTURERS / SUPPLIERS
(SECTION 00300B)

Bidder proposes the following substitutions and "or equal" items of alternate manufacturers/suppliers for the equipment of material categories so identified:

	Equipment Item Material	Drawing No.	Spec. Section	Substitute/"or equal" Manufacturer/Supplier (List One Only)	Proposed Price Deduct
1.		N.A.			
2.					
3.					
4.					
5.					
6.					
7.					
9.					
10.					

SUBSTITUTIONS AND "OR EQUAL"

The above signed as Bidder agrees that substitutions or "or equal" items will not be considered until after the "Effective Date of the Agreement" and will be evaluated in accordance with Paragraphs 6.7, 6.7.1 and 6.7.2, of the General Conditions as amended by the Supplementary Conditions. If Bidder intends to propose substitutions or "or equal" items after the "Effective Date of the Agreement", it is agreed that these items will be listed on the Substitution List included with the Bid (form provided herein). Only the proposed substitutions or "or equal" items listed on the Substitution List will be evaluated by the Engineer in accordance with the General Conditions.

QUESTIONNAIRE FORM
(SECTION 00301)

DATE: 3-14-2013

PROJECT IDENTIFICATION City of Deltona – Public Works Division
TIPTON DRIVE IMPROVEMENTS

NAME OF BIDDER: Crossroads Site Development & Underground Utilities LLC

BUSINESS ADDRESS: 284 Suite B Hand Ave Ormond Beach Fl, 32174

TELEPHONE NO: 386-672-4200

CONTRACTOR'S FLORIDA LICENSE NO: CGC 1516858 CUC 1224346

The signed bidder warrants the truth and accuracy of all statements and answers herein contained. Include additional sheets if necessary.

1. How many years has your organization been in business as a General Contractor? 7

2. Have you ever failed to complete work awarded to you? If so, where and why?
   no

3. Name three (3) municipalities or government entities for which you have performed similar projects as this one and to which you refer?
   See Attached

4. Have you personally inspected the site of the proposed Work? Describe any anticipate problems with the site and your proposed solutions. Yes None

5. Will you Subcontract any part of this Work? If so, describe which portion(s).
   Sod - Barricades - Asbuilts

6. What equipment do you own that is available for the Work? (attach additional sheets if necessary)
See Atached

7. What equipment will you purchase for the Work?
none

8. What equipment will you rent for the Work?
None

9. The following is given as a summary of the Financial Statement of the undersigned: (List Assets and Liabilities and use insert sheet if necessary.)
Upon Award

10. State the true and exact, correct, and complete name under which you do business.
Bidder is: **Crossroads Site Development & Underground Utilities LLC**

SUB-CONTRACTORS AND AFFILIATES FORM
(SECTION 00301A)

The following are a list of Sub Contractors or Affiliates that will be utilized in this project. Use additional sheets if necessary.

1. Firm Name: D & W Paving
   Trade: Paving
   Firm Owner: Chris Durrance
   Firm Address: Holly Hill Florida
   Firm Phone Number: 258-5440

2. Firm Name: Bonnies Barricades WBE
   Trade: Barricades
   Firm Owner: Bonnie Marsh
   Firm Address: Ormond Beach
   Firm Phone Number: _____

3. Firm Name: _____
   Trade: _____
   Firm Owner: _____
   Firm Address: _____
   Firm Phone Number: _____

4. Firm Name: _____
   Trade: _____
   Firm Owner: _____
   Firm Address: _____
   Firm Phone Number: _____

5. Firm Name: _____
   Trade: _____
   Firm Owner: _____
   Firm Address: _____
   Firm Phone Number: _____

REFERENCES FORM
(SECTION 00301B)

The City of Deltona is seeking Contractors who have proven past, positive experiences in projects of similar and same size of scope of work. These references are required with your submittals. References shall contain the Owners contact information for the projects referenced. References with another Contractor listed as the Owner shall not be accepted. Contractors not having past, positive experiences in projects of similar and same size of scope of work, as the Prime Contractor, will not be considered. References which are located in foreign countries are not acceptable.

1. Project Name: SEE Attached Sheets
   Project Value: _____
   Project Description: _____
   Project Owner: _____
   Owner contact information: _____
   Project Location: _____
   Project Start and End Dates: _____

2. Project Name: _____
   Project Value: _____
   Project Description: _____
   Project Owner: _____
   Owner contact information: _____
   Project Location: _____
   Project Start and End Dates: _____

3. Project Name: _____
   Project Value: _____
   Project Description: _____
   Project Owner: _____
   Owner contact information: _____
   Project Location: _____
   Project Start and End Dates: _____

4. Project Name: _____
   Project Value: _____
   Project Description: _____
   Project Owner: _____
   Owner contact information: _____
   Project Location: _____
   Project Start and End Dates: _____

STATE OF FLORIDA
DEPARTMENT OF BUSINESS AND PROFESSIONAL REGULATION

CONSTRUCTION INDUSTRY LICENSING BOARD (850) 487-1395
1940 NORTH MONROE STREET
TALLAHASSEE FL 32399-0783

LORENZO, WILLIAM JOHN
CROSSROADS SITE DEVELOPMENT AND UNDERGROUND UTILITIES LLC
96 DRIFTWOOD AVE
ORMOND BEACH FL 32176

Congratulations! With this license you become one of the nearly one million Floridians licensed by the Department of Business and Professional Regulation. Our professionals and businesses range from architects to yacht brokers, from boxers to barbeque restaurants, and they keep Florida's economy strong.

Every day we work to improve the way we do business in order to serve you better. For information about our services, please log onto **www.myfloridalicense.com**. There you can find more information about our divisions and the regulations that impact you, subscribe to department newsletters and learn more about the Department's initiatives.

Our mission at the Department is: License Efficiently, Regulate Fairly. We constantly strive to serve you better so that you can serve your customers. Thank you for doing business in Florida, and congratulations on your new license!

STATE OF FLORIDA AC# 6234021
DEPARTMENT OF BUSINESS AND PROFESSIONAL REGULATION

CUC1224346 07/30/12 120044789

CERT UNDERGROUND & EXCAV CNTR
LORENZO, WILLIAM JOHN
CROSSROADS SITE DEVELOPMENT AND

IS CERTIFIED under the provisions of Ch.489 FS
Expiration date: AUG 31, 2014 L12073001606

DETACH HERE

THIS DOCUMENT HAS A COLORED BACKGROUND • MICROPRINTING • LINEMARK™ PATENTED PAPER

AC# 6234021

STATE OF FLORIDA
DEPARTMENT OF BUSINESS AND PROFESSIONAL REGULATION
CONSTRUCTION INDUSTRY LICENSING BOARD

SEQ# L12073001606

DATE	BATCH NUMBER	LICENSE NBR
07/30/2012	120044789	CUC1224346

The UNDERGROUND UTILITY & EXCAVATION CO
Named below IS CERTIFIED
Under the provisions of Chapter 489 FS.
Expiration date: AUG 31, 2014

LORENZO, WILLIAM JOHN
CROSSROADS SITE DEVELOPMENT AND UNDERGROUND UTILITIES LLC
96 DRIFTWOOD AVE
ORMOND BEACH FL 32176

RICK SCOTT
GOVERNOR

KEN LAWSON
SECRETARY

DISPLAY AS REQUIRED BY LAW

STATE OF FLORIDA
DEPARTMENT OF BUSINESS AND PROFESSIONAL REGULATION

CONSTRUCTION INDUSTRY LICENSING BOARD (850) 487-1395
1940 NORTH MONROE STREET
TALLAHASSEE FL 32399-0783

LORENZO, WILLIAM JOHN
CROSSROADS SITE DEVELOPMENT AND UNDERGROUND UTILITIES LLC
96 DRIFTWOOD AVE
ORMOND BEACH FL 32176

Congratulations! With this license you become one of the nearly one million Floridians licensed by the Department of Business and Professional Regulation. Our professionals and businesses range from architects to yacht brokers, from boxers to barbeque restaurants, and they keep Florida's economy strong.

Every day we work to improve the way we do business in order to serve you better. For information about our services, please log onto **www.myfloridalicense.com**. There you can find more information about our divisions and the regulations that impact you, subscribe to department newsletters and learn more about the Department's initiatives.

Our mission at the Department is: License Efficiently, Regulate Fairly. We constantly strive to serve you better so that you can serve your customers. Thank you for doing business in Florida, and congratulations on your new license!

AC# 6233875

STATE OF FLORIDA
DEPARTMENT OF BUSINESS AND PROFESSIONAL REGULATION

CGC1516858 07/30/12 120044620

CERTIFIED GENERAL CONTRACTOR
LORENZO, WILLIAM JOHN
CROSSROADS SITE DEVELOPMENT AND

IS CERTIFIED under the provisions of Ch.489 FS
Expiration date: AUG 31, 2014 L12073001460

DETACH HERE

THIS DOCUMENT HAS A COLORED BACKGROUND - MICROPRINTING - LINEMARK™ PATENTED PAPER

AC# 6233875

STATE OF FLORIDA
DEPARTMENT OF BUSINESS AND PROFESSIONAL REGULATION
CONSTRUCTION INDUSTRY LICENSING BOARD

SEQ# L12073001460

DATE	BATCH NUMBER	LICENSE NBR
07/30/2012	120044620	CGC1516858

The GENERAL CONTRACTOR
Named below IS CERTIFIED
Under the provisions of Chapter 489 FS.
Expiration date: AUG 31, 2014

LORENZO, WILLIAM JOHN
CROSSROADS SITE DEVELOPMENT AND UNDERGROUND UTILITIES LLC
284 HAND AVE SUITE B
ORMOND BEACH FL 32174

RICK SCOTT
GOVERNOR

KEN LAWSON
SECRETARY

DISPLAY AS REQUIRED BY LAW

Crossroads Site Development & Underground Utilities, LLC

Work Experience

Owner / General Contractor	Address	Phone	Project & Type of Work	Location	Approx. Price	Year
B & B Underground Contractors **Attn: Steven Decker** Owner: City of Palm Coast	6900 Dwight Road West Palm Beach, FL 33411	561-204-9335	Robert's Road & Sea Ray Drive sidewalk removal and replacement fine grade & restore right of way Construct 8" Master meter with bypass	Palm Coast , FL	**$70,000**	2007
B & B Underground Contractors **Attn: Steven Decker** Owner: County of St. Lucie	6900 Dwight Road West Palm Beach, FL 33411	561-204-9335	Indian River Estates Potable Water install 16,500' of 8" water main install 27,500 of 6" water main installed approx. 64 fire hydrants with new water services all work done with flaggers and lane closure	Port St. Lucie, FL	**$215,630** **Labor Only**	2007
D & W Paving **Attn: Clay Durrance**	308 Sunset Ave Holly Hill, FL 32115	386-258-5440	Coconut's Carwash Site grading & parking lot construction	Palm Coast, FL	**$15,500** **Labor Only**	2007
D & W Paving **Attn: Clay Durrance**	308 Sunset Ave Holly Hill, FL 32115	386-258-5440	Riverside Bank Site grading & parking lot construction	Deltona, FL	**$9,500** **Labor Only**	2007
D & W Paving **Attn: Clay Durrance** Owner: City of South Daytona	308 Sunset Ave Holly Hill, FL 32115	386-258-5440	Steven's Pond Finish grade site	Daytona Beach, FL	**$2,000** **Labor Only**	2007
D & W Paving **Attn: Clay Durrance**	308 Sunset Ave Holly Hill, FL 32115	386-258-5440	Crossroads Church Site grading & parking lot construction	Port Orange, FL	**$5,600** **Labor Only**	2007
D & W Paving **Attn: Clay Durrance** Owner: City of Daytona Beach	308 Sunset Ave Holly Hill, FL 32115	386-258-5440	Cypress Street Park Site grading & parking lot construction	Daytona Beach, FL	**$5,600** **Labor Only**	2007
D & W Paving **Attn: Clay Durrance** Owner: Neighbors Ice Cream	308 Sunset Ave Holly Hill, FL 32115	386-258-5440	Neighbors Ice Cream Storm drainage, sewer, potable water	Port Orange, FL	**$ 25,000.00**	2008
D & W Paving **Attn: Clay Durrance** Owner: New Port Orange Police Station	308 Sunset Ave Holly Hill, FL 32115	386-258-5440	Port Orange Police Station Storm drainage	Port Orange, FL	**$ 150,000.00**	2008
R.F. Concrete Construction **Attn: Ron Foulks - V.P.**	664 Old Dixie Highway Vero Beach, FL 32962	772-567-3356	Pepsi Distribution Center site grading & parking lot construction	Daytona Beach, FL	**$15,000 ytd**	2008

Continuation - Work Experience

Crossroads Site Development & Underground Utilities, LLC

The City of Oviedo **Attn: Sofia Liatsos**	400 Alexandria Blvd Oviedo, FL 32765	407-971-5647	Garden Grove Water Main Water main removal & replacement Roadway removal & replacement for water main replacement(open cut) hydrants(water services)	Oviedo, FL	**$ 106,000.00**	2008
Saboungi Construction Inc. **Attn: Mounir**	290 N Highway U.S. 1 Ormond Beach, FL 32174	386-672-2077	Coraci Sports Park Site Development & Underground Util Pond excavation- 8" Water-main	Port Orange, FL	**$ 825,000.00**	2008
City of Port Orange Inspector **Attn: Luther W. Davidson** Commercial Building Inspector ICC Certificate # 5256398-B2 ***Quentin L. Hampton Associates, Inc.***		386-852-3065	140,000cy fill placement Storm drain -roadway and parking lot 2 complete ball fields			
Summerhaven Prof. Centre **Cotter Ryan Commercial**	410 Summerhaven Drive Debary, FL 32720		Summerhaven Prof. Centre site grading - exfiltration system - lift station- forcemain - sewer directional drilling -base- paving- curb	Debary, FL	**$ 255,000.00**	2009
The City of Altamonte Springs **Attn: Jim Wickert**	225 Newburryport Ave. Altamonte Sprgs,FL 32701	407-571-8560	Fire hydrant replacement directional drilling - water services open-cut- back flow preventers	Altamonte Spgs	**$ 79,000.00**	2009
The City of Winter Garden **Attn: Nicolle Van Valkenburg** City Engineer	300 West Plant Street Winter Garden FL 34787	407-656-4111	Interconnection between 12" Reuse Main, Directional Drills, Wet Taps, Roadway open cut-repair	Winter Garden	**$ 84,000.00**	2009
The City of Holly Hill **Attn: Chris Hurst**	1065 Ridgewood Ave. Holly Hill, FL 32117	386-248-9441	Storm drain - construct swales	Holly Hill	**$ 25,000.00**	2009
Sunrise Elementary A.M. Weigel 200 Magnolia Ave. Daytona Beach, FL 32114 **Attn: Dwight Pickett**	3155 Phonetia Drive Deltona, FL	386-257-6691	Removal and replacement of unsuitable material - storm drain water, sewer, site grading, paving, fireline	Deltona	**$ 270,000.00**	2010
The City of Bunnell **Attn: Bill Green**	1769 East Moody Blvd Bunnell, FL 32110	386-586-5159	concrete ditch paving -slope stabilization- roadway removal and replacement with new headwalls with new storm drain at existing canal-bypass pumping	Bunnell	**$ 138,000.00**	2010
The City of Daytona Beach	125 Basin street Ste 130	386-671-8813	Directional Drills, Roadway open cut-repair Water Service Replacement	Daytona Beach	**$ 95,575.00**	201

Attn: Frank Van Pelt	Daytona Beach FL 32114		Replace Existing water services Directional Drills, Roadway open cut-repair			
The City of Daytona Beach **Attn: Jim Nelson** Joint Venture w/ Truant Construction	P.O. Box 2451 Daytona Beach FL 32115	386-671-8613	Old Daytona Historic Neighborhood Streetscape 16"-24" force mains, valves, tie-ins 6"-12" water and reuse mains, wet-taps, line-stops, storm drain, hand formed conflict boxes paving, irrigation, curb, stamped concrete, colored concrete	Daytona Beach	**$ 402,000.00**	2011
The City of Bunnell **Attn: Bill Green**	1769 East Moody Blvd Bunnell, FL 32110	386-586-5159	S Railroad Street Remove 540' of failing asphalt and base Replace with new base and asphalt Grade and sod existing washouts on ditch	Bunnell	**$ 18,440.00**	2011
Quentin L Hampton Associates **Attn: Andrew Giannini P.E.** Project Manager	4401 Eastport Parkway Port Orange Florida 32129	386-761-6810	North and South Turn Beach Improvements Remove and install new concrete beach approach Remove and install new concrete sidewalks Install new pavers and retaining wall Install new flag poles and monuments	Ponce Inlet	**$ 103,000.00**	2011
Pero Properties, LLC **Attn: Edwin D. Davis, II, P.A.**	2450 South Palmetto Ave. South Daytona, FL 32119 (5 Unit Apartment Complex)	386-672-1711	Construct enclosure to meet with City specs Remove and replace roof Paint structure Renovated interior to include removal and install bathroom, kitchen and flooring Update parking	South Daytona	**$ 45,000.00**	2011
B & B Underground Contractors **Attn: Steven Decker** **(B-B Prime Contractor)**	6900 Dwight Road West Palm Beach, Fl 33411	561-204-9335	Spring Lake Forcemain Remove 2000' of 16" DIP Forcemain Install 2000' of 24" DR-18 Forcemain & Fittings & 24" Plug Valve & Air Release Vault Roadway open cut-repair	Altamonte Springs	**$80,000** **LABOR ONLY**	2012
City of Palm Coast **Attn: Mary Kroneberg** Project Manager	2 Utility Drive Palm Coast, FL 32137	386-986-2306	Roberts Road Forcemain Install 1200' of 8" DR-18 Forcemain 10" HDPE Directional Drills 8" Plug Valve & Air Release Vault	Palm Coast	**$ 53,575.00**	2012
City of Ormond Beach **Attn: James Davis** Project Manager	501 N. Orchard Street Ormond Beach FL, 32174	386-676-3574	Remove and Replace 24" Gate Valve at Water Treatment Plant	Ormond Beach	**$ 4,000.00** **LABOR ONLY**	2012

City of Mt Dora Attn: Gus Gianikas Project Manager	510 N. Baker Street Mount Dora FL, 32757	352-735-7112 Ext. 1705	Donnelly Street Parking Garage Modification Demo Existing Wall & Structures Install new Concrete Retaining Wall Install new Storm Drain & Retention Pond Install new Sewer Main & Concerte Curb Install new Base & Paving	Mt. Dora	$ 161,000.00	2012

July 24, 2008

Your Prompt Response is Appreciated

Appropriate Individual JOHN CARAWAY
Obligee Company or Agency CITY OF OVIEDO, FLORIDA
Address 400 ALEXANDRIA BLVD.
City, State Zip OVIEDO, FL 32765

FAX: 503.684.4066
EMAIL: IDGSI@INSCODICO.COM
ENCLOSED RETURN ENVELOPE

Re: Principal/Contractor CROSSROADS SITE DEVELOPMENT
Project: Job Description GARDEN GROVE WATE MAIN REPLACEMENT
Contract No.: 080467
Bond #: 58268110 [redacted]
Original Contract Price: $ 96,975

Without prejudicing your rights or affecting our liability under the bond described above, we would appreciate your response on the referenced project.

Thank you for your assistance.

1) **GENERAL CONTRACT PERFORMANCE**
   A) Is the Contractor well organized? YES
   B) Is the Contractor cooperative and business-like? YES
   C) Are Subcontractors well qualified? YES
   D) Describe the quality of workmanship: EXCELLENT

2) **IF THE CONTRACT IS COMPLETE,** please advise:
   A) Approximate acceptance date: _____
   B) Final contract price: $ 106,775

3) **IF THE CONTRACT IS NOT COMPLETE,** please advise:
   A) Approximate percentage or dollar amount of contract completed or delivered to date: 100% OF BASE CONTRACT *
   B) Is the project on schedule? YES
   C) Anticipated completion date: 07/28/08
   D) Are there any unpaid bills for labor or material? NONE THAT WE ARE AWARE OF
   E) Have any stop notices or liens been filed? NO
   F) Are there any significant Change Orders? ONE If so, Amount? $ 9,800

4) **COMMENTS** * CONTRACTOR HAS COMPLETED BASE CONTRACT WORK & IS CURRENTLY COMPLETING ADDITIONAL WORK FOR THE CITY. CONTRACTOR HAS BEEN EXCEPTIONALLY ATTENTIVE TO THE NEEDS OF THE CITY & RESIDENTS

By: [signature] Date: 07/25/08
Name & Title: JOHN CARAWAY CITY OF OVIEDO CAPITAL PROJECTS MANAGER Phone: (407) 971-5647
Email: JCARAWAY@CITYOFOVIEDO.NET Fax: (407) 971-5822

CITY OF PORT ORANGE

COMMUNITY DEVELOPMENT
1000 CITY CENTER CIRCLE
PORT ORANGE, FLORIDA 32129
TELEPHONE 386-506-5600
FAX 386-506-5699
www.Port-Orange

November 19, 2008

Crossroads Site Development & Underground Utilities, LLC

Subject: Performance of Crossroads Site development & Underground Utilities
Acting as subcontractor on the Coraci Sports Park construction project
Under construction from March to November 2008.

To Whom It May Concern:

At the request of Crossroads LLC I am providing an evaluation of their performance on this project.

General Contract Performance:
Crossroads was organized, business like, cooperative and preformed high quality work.
This project is substantially complete and was completed on schedule.
The contract value is approximately $1.4 million including change orders.

It has been a pleasure working with Crossroads on this project and I would recommend them for future work.

Sincerely,

Michael H. Hill
Community Development Engineer
City of Port Orange
(386) 506-5660
mhill@port-orange.org

520 Palm Coast Parkway SW
Palm Coast, Florida 32137

Phone: 386.445.6569
Fax: 386.447-8991

www.cphengineers.com

April 11, 2012

Mr. Brian Rothwell
Purchasing Manager
City of Palm Coast
160 Cypress Point Parkway, Suite B106
Palm Coast, FL 32164

Re: Construction of the Roberts Road Force Main Extension
ITB-PW-U-12-06
CPH Job No. P61205

Dear Brian:

Bids were received for the Construction of the Roberts Road Force Main Extension Project on April 4, 2012.

Crossroads Site Development & Underground Utilities, LLC (CSDU) of Ormond Beach, Florida, submitted the low base bid of $53,593.00.

The bids that were submitted ranged from the low bid of $53,593.00 to a high of 116,753.50.

CSDU is the General Contractor and will be responsible for Construction of the Roberts Road Force Main Extension. A large share of the previous construction experience of CSDU has been in the area of underground utilities. We have not worked with CSDU on any projects, but we contacted some of the references they provided, and received very favorable comments and recommendations.

Based on the responses received from the references, it is recommended that the base bid of $53,593.00 be accepted, and that an award be made to Crossroads Site Development & Underground Utilities, LLC.

All of the required permits for this project have been received.

Please contact CPH if you have any questions or would like to discuss our recommendation.

Sincerely,

CPH Engineers, Inc.

Marcus Crosby

Marcus Crosby
Project Manager

Copy: Richard Adams
Steve Flanagan
Mary Kronenberg
David Klages

BESH
BOOTH ERN STRAUGHAN HIOTT

VIA EMAIL & U.S. MAIL

August 20, 2012

Mr. John Bruce
CITY OF MOUNT DORA
1250 North Highland Street
Mount Dora, Florida 32757

RE: **DONNELLY STREET PARKING GARAGE MODIFICATIONS**
BID RECOMMENDATION (BESH #881445.0120)

Dear Mr. Bruce:

We are in receipt of the bids for the above referenced project, which were opened at 2:00 p.m. on Thursday, August 16, 2012. We have reviewed the bid packages for completeness and accuracy, and have checked references and bid requirements for the apparent low bidder. The results of the bid opening, in order of bid price, are as follows:

1.	Crossroads Site Development & Underground Utilities, LLC	$	207,940.00
2.	Pillar Construction Group, LLC	$	238,723.90
3.	American Persian Engineers & Constructors, Inc.	$	253,395.85

Based upon our review of the bids and positive references from previous clients and consultants, we would recommend approval of the bid provided by the low bidder Crossroads Site Development & Underground Utilities, LLC, in the amount of $207,940.00.

Should you have any questions with regards to this matter, please feel free to contact our office.

Sincerely,

BOOTH, ERN, STRAUGHAN & HIOTT, INC.

Robert A. Ern, Jr., P.E.
Vice-President/Principal
rern@besandh.com

RAE\sd

c: Gus Gianikas, City of Mount Dora (via e-mail)

H:\stacey\WordPerfect\Rob\City of Mount Dora\Donnelly St Parking Garage Mod - Ph 1 - 921083.0120\Bid Documents\Recommendation Letter 08-20-12.wpd

ENGINEERS ♦ SURVEYORS ♦ LAND PLANNERS
350 North Sinclair Avenue ♦ Tavares, Florida 32778
Phone: 352.343.8481 ♦ Fax: 352.343.8495
E-Mail: info@besandh.com ♦ www.besandh.com

CORPORATE RESOLUTION FORM
(SECTION 00420)

I, TAYLOR LORENZO, Secretary of CROSSROADS SITE DEVELOPMENT, a corporation organized and existing under the laws of the State of FLORIDA, hereby certify that at a meeting of the Board of Directors of the Corporation duly called and held on MARCH 4, 2013 at which a quorum was present and acting throughout, the following resolutions were adopted and are now in full force effect:

RESOLVED that the following individuals of this corporation are authorized to execute on behalf of this corporation A Bid and Agreement to _____ for the construction of _____ _____.

I further certify that the names of the officers of this corporation and any other persons authorized to act under this resolution and their official signatures are as follows:

NAME	OFFICE	OFFICIAL SIGNATURE
WILLIAM J LORENZO	V.P	
DAVID J. PATTERSON	PRES.	

IN WITNESS THEREOF, I have hereunto subscribed my name as Secretary and affixed the seal of the corporation this 4 day of MARCH, 2013

HOLD HARMLESS AND INDEMNITY AGREEMENT
(SECTION 00430)

William J Lorenzo, agrees through the signing of this document by an authorized party or agent that it shall defend, indemnify and hold harmless the City of Deltona, and its agents, employees, and public officials from and against all suits, losses, claims, demands, judgments of every name and description arising out of or incidental to the performance of this contract or work performed thereunder, whether or not due to or caused by the negligence of the City of Deltona, its agents, employees, and public officials excluding only the sole negligence of the City of Deltona, its agents, employees, and Public Officials.

This provision shall also pertain to any claims brought against the City of Deltona, its agents, employees, and public officials by an employee of the named Contractor, any Sub-contractor, or anyone directly or indirectly employed by any of them.

The Contractor's obligation to indemnify the City of Deltona, its agents, employees and public officials under this provision shall be limited to $1,000,000 per occurrence which the parties agree bears a reasonable commercial relationship to the contract.

The Contractor agrees to accept, and acknowledges as adequate remunerations, the consideration of $10, which is part of the agreed bid price, the promises contained herein, and other good and valuable consideration, the receipt of which is hereby acknowledged, for agreement to enter into this Hold Harmless and Indemnity Agreement.

Crossroads Site Development & Underground Utilities, LLC

William J Lorenzo

CONTRACTOR

3-5-12

DATE

DRUG-FREE WORKPLACE FORM
(SECTION 00440)

The undersigned Bidder in accordance with Florida Statute 287.087, hereby certifies that **Crossroads Site Development & Underground Utilities LLC** does:
(*Name of Business*)

1. Publish a statement notifying employees that the unlawful manufacture, distribution, dispensing, possession, or use of a controlled substance is prohibited in the workplace and specifying the actions that will be taken against employees for violations of such prohibition.

2. Inform employees about the dangers of drug abuse in the workplace, the business's policy of maintaining a drug-free workplace, any available drug counseling, rehabilitation, and employee assistance programs, and the penalties that may be imposed upon employees for drug abuse violations.

3. Give each employee engaged in providing the commodities or contractual services that are proposed a copy of the statement specified in subsection (1).

4. In the statement specified in subsection (1), notify the employees that, as a condition of working on the commodities or contractual services that are under bid, the employee will abide by the terms of the statement and will notify the employer of any conviction of, or plea of guilty or nolo contendere to, any violation of Chapter 893 or of any controlled substance law of the United States or any state, for a violation occurring in the workplace no later than five (5) days after such conviction.

5. Impose a sanction on, or require the satisfactory participation in a drug abuse assistance or rehabilitation program if such is available in the employee's community, by any employee who is so convicted.

6. Make a good faith effort to continue to maintain a drug-free workplace through implementation of this section.

As the person authorized to sign the statement, I certify that this firm complies fully with the above requirements.

X _____
Bidder's Signature

3-14-2013
_____
Date

PROPOSER'S CERTIFICATION FORM
(SECTION 00460)

I have carefully examined the Request for Proposal, Instructions to Proposers, General and/or Special Conditions, Vendor's Notes, Specifications, proposed agreement and any other documents accompanying or made a part of this Request for Proposal.

I hereby propose to furnish the goods or services specified in the Request for Proposal at the prices and rates quoted in my Proposal. I agree that my Proposal will remain firm for a period of up to one hundred twenty (120) days in order to allow the City adequate time to evaluate the Proposal.

I agree to abide by all conditions of the Proposal and understand that a background investigation may be conducted by the City of Deltona prior to award.

I certify that all information contained in this Proposal is truthful to the best of my knowledge and belief. I further certify that I am a duly authorized to submit this Proposal on behalf of the vendor / contractor as its act and deed and that the vendor / contractor is ready, willing and able to perform if awarded the contract.

I further certify, under oath, that this Proposal is made without prior understanding, agreement, connection, discussion, or collusion with any other person, firm or corporation submitting a Proposal for the same product or service; no officer, employee or agent of the City of Deltona Government or of any other Proposer interested in said Proposal; and that the undersigned executed this Proposer's Certification with full knowledge and understanding of the matters therein contained and was duly authorized to do so.

Name of Business

By: _____
Signature

DAVID J. PATTERSON - PRES
Name & Title, Typed or Printed

284 HAND AVE. SUITE B
Mailing Address

ORMOND BEACH, FL 32174
City, State, Zip Code

386 672-4200
Telephone Number

Sworn to and subscribed before me

This 4 day of

MARCH, 20 13

Taylor Alexis Marsh Lorenzo
Signature of Notary

Notary Public, State of FL

Personally known
-OR-
Produced Identification _____

TAYLOR ALEXIS MARSH LORENZO
Notary Public - State of Florida
My Comm. Expires Jul 12 2014
Commission # DD 973276

SWORN STATEMENT UNDER SECTION 287.133(3)(A), FLORIDA STATUTES, ON PUBLIC ENTITY CRIMES (SECTION 00470)

THIS FORM MUST BE SIGNED IN THE PRESENCE OF A NOTARY PUBLIC OR OTHER OFFICER AUTHORIZED TO ADMINISTER OATHS.

This sworn statement is submitted to the City of Deltona by **William J Lorenzo**
(Individual's name and title)

For **Crossroads Site Development & Underground Utilities LLC**
(Name of entity submitting sworn statement)

Whose business address is **284 Suite B Hand Ave Ormond Beach Fl 32174**

And (if applicable) its Federal Employer Identification Number (FEIN) is **26-0386699**
(if the entity has no FEIN, include the Social Security Number of the individual signing this sworn statement)

1. I understand that a "public entity crime" as defined in Section 287.133(1)(g), Florida Statutes, means a violation of any State or Federal law by a person with respect to and directly related to the transaction of business with any public entity or with an agency or political subdivision of any other state or with the United States, including, but not limited to, any bid or contract for goods or services to be provided to any public entity or an agency or political subdivision of any other state or a of the United States and involving antitrust, fraud, theft, bribery, collusion, racketeering, conspiracy, or material misrepresentation.

11. I understand that "convicted" or "conviction" as defined in Paragraph 287.133(1)(b), Florida Statutes, means a finding of guilt or a conviction of a public entity crimes, with or without an adjudication of guilt, in any Federal or State trial court of record relating to charges brought by indictment or information after July 1, 1989, as a result of a jury verdict, non-jury trial, or entry of a plea of guilty or nolo contendere.

12. I understand that an "affiliate' as defined in Section 287.133(1)(a), Florida Statutes, means:

    A predecessor or successor of a person convicted of a public entity crime: or an entity under the control of any natural person who is active in the management of the entity and how has been convicted of a public entity crime. The term "affiliate" includes those officers, directors, executives, partners, shareholders, employees, members, and agents who are active in the management of an affiliate. The ownership by one (1) person of shares constituting a controlling interest in another person, or a pooling of equipment or income among persons when not for fair market value under an arm's length agreement, shall be a prima facie case that one person controls another person. A person who knowingly enters into a joint venture with a person who has been convicted of a public entity crime in Florida during the preceding thirty-six (36) months shall be considered an affiliate.

13. I understand that a "person" as defined in Section 287.133(1)(e), Florida Statutes, means any natural person or entity organized under the laws of any state or of the United States with the legal power to enter into a binding contract and which bids or applies to bid on contracts for the provision of goods or services let by a public entity, or which otherwise transacts or applies to transact business with a public entity. The term "person" includes those officers, directors, executives, partners, shareholders employees, members, and agents who are active in management of an entity.

14. Based on information and belief, the statement which I have marked below is true in relation to the entity submitting this sworn statement. (You must indicate which statement applies.)

(SECTION 00470 Continued)

x Neither the entity submitting this sworn statement, nor any officers, directors, executives, partners, shareholders, employees, members, or agent who is active in management of the entity, nor the affiliate of the entity has been charged with and convicted of a public entity crime subsequent to July 1, 1989.

_____ The entity submitting this sworn statement, or one or more of the officers, directors, executives, partners, shareholders, employees, members or agent who are active in management of the entity, or an affiliate of the entity, has been charged with and convicted of a public entity crime subsequent to July 1, 1989.

_____ The entity submitting this sworn statement, or one or more of the officers, directors, executives, partners, shareholders, employees, members or agents who are active in management of the entity, or an affiliate of the entity, has been charged with and convicted of a public entity crime subsequent to July 1, 1989. However, there has been a subsequent proceeding before an Administrative Law Jury of the State of Florida, Division of Administrative Hearings and the Final Order entered by the Administrative Law Jury determined that it was not in the public interest to place the entity submitting this sworn statement on the convicted vendor list. (You must attach a copy of the final order).

I UNDERSTAND THAT THE SUBMISSION OF THIS FORM TO THE CITY OF DELTONA IS FOR THE CITY ONLY AND, THAT THIS FORM IS VALID THROUGH DECEMBER 31, OF THE CALENDAR YEAR IN WHICH IT IS FILED. I ALSO UNDERSTAND THAT I AM REQUIRED TO INFORM THE CITY PRIOR TO ENTERING IN TO A CONTRACT IN EXCESS OF THE THRESHOLD AMOUNT PROVIDED IN SECTION 287.017, FLORIDA STATUTES, FOR CATEGORY TWO OF ANY CHANGE IN THE INFORMATION CONTAINED IN THIS FORM.

SIGNATURE

3-4-13

DATE

State of FLORIDA
County of VOLUSIA

Personally appeared before me, the undersigned authority, DAVID J. PATTERSON (name of individual signing) who, after first being sworn by me, affixed his/her signature in the space provided above on the 4 day of MARCH, 2013.

NOTARY PUBLIC

My commission expires:

TAYLOR ALEXIS MARSH LORENZO
Notary Public - State of Florida
My Comm. Expires Jul 12, 2014
Commission # DD 973276

NON COLLUSION AFFIDAVIT FORM
(SECTION 00480)

STATE OF FLORIDA

COUNTY OF VOLUSIA

DAVID J. PATTERSON, being first duly sworn deposes and says that:

i. He/She is the PRESIDENT, of CROSSROADS ..., the Bidder that has submitted the attached Bid;

ii. He/She is fully informed respecting the preparation and contents of the attached Bid and of all pertinent circumstances respecting such Bid;

iii. Such Bid is genuine and is not a collusive or sham Bid;

iv. Neither the said Bidder nor any of its officers, partners, owners, agents, representatives, employees, or parties in interest, including this affidavit, have in any way, colluded, conspired, connived or agreed, directly or indirectly, with any other Bidder, firm or person to submit a collusive or sham Bid in connection with the Contract for which the attached Bid has been submitted; or to refrain from bidding in connection with such Contract; or have in any manner, directly or indirectly, sought by agreement or collusion,, or communication, or conference with any Bidder, firm, or person to fix the price or prices in the attached Bid or of any other Bidder, or to fix any overhead, profit, or cost elements of the Bid price or the Bid price of any other Bidder, or to secure through any collusion, conspiracy, connivance, or unlawful agreement any advantage against (Recipient), or any person interested in the proposed Contract;

v. The price or prices quoted in the attached Bid are fair and proper and are not tainted by any collusion, conspiracy, connivance, or unlawful agreement on the part of the Bidder or any other of its agents, representatives, owners, employees or parties in interest, including this affidavit.

By _____

Sworn and subscribed to before me this 4 day of MARCH, 2013, in the State of FLORIDA, County of VOLUSIA.

Taylor Alexis Marsh Lorenzo
Notary Public

My Commission expires:

TAYLOR ALEXIS MARSH LORENZO
Notary Public - State of Florida
My Comm. Expires Jul 12, 2014
Commission # DD 973276

TRENCH SAFETY AFFIDAVIT FORM
(SECTION 00490)

(FAILURE TO COMPLETE THIS FORM MAY RESULT IN THE BID BEING DECLARED NON-RESPONSIVE)

Crossroads Site Development & Underground Utilities LLC (NAME OF CONTRACTOR) hereby provides written assurance that compliance with applicable Trench Safety Standards identified in the Occupational Safety & Health Administration's Excavation Safety Standards (OSHA) 29 C.F.R.S. 1926.650 Subpart P will be adhered to during trench excavation in accordance with Florida Statutes 553.60 through 533.64 inclusive (1990) "Trench Safety Act".

The specific methods of compliance with applicable Trench Safety Standards, and the associated cost of compliance (costs included in the Bid Price), are as follows (attach additional sheets if necessary):

Item and Safety Measure	Cost
Trench Box	$ **500-**
Simple Slope	$ **500-**
	$
	$
	$
	$
	$
TOTAL	$ **1000-**

By the signature of its undersigned authorized representatives, the Bidder hereby assures the CITY OF DELTONA that any such excavation performed by the Bidder will be performed in compliance with all applicable trench safety standards.

By _____

Sworn and subscribed to before me this 4 day of MARCH, 2013, in the State of FLORIDA, County of VOLUSIA.

_____ Notary Public

My Commission expires:

TAYLOR ALEXIS MARSH LORENZO
Notary Public - State of Florida
My Comm. Expires Jul 12, 2014
Commission # DD 973276

BIDDER'S CONTACT AND INFORMATION FORM
(SECTION 00110)

Bidder (Company) Name: Hazen Construction, LLC	F. E. I. N. or SS Number: 01-0569979
Mailing Address: 1599 Tionia Road	Street Address: 1599 Tionia Road
City, State, Zip: New Smyrna Beach, FL 32168	City, State, Zip: New Smyrna Beach, FL 32168
Type of Entity: *(Circle one)* Corporation Partnership Proprietorship Joint Venture	*I hereby certify that this bid is made without prior understanding, agreement, or connection with any corporation, firm, or person submitting a bid for the same materials, supplies or equipment, and is in all respects fair and without collusion or fraud. I agree to abide by all conditions of this bid and certify that I am authorized to sign this bid for the Bidder.* X _____ Authorized Signature (Manual)
Incorporated in the State of: Florida Year: 2001	Typed or Printed Name: Chad S Hazen
Telephone Number: (386) 322-8700	Title: President
Fax Number: (386) 756-0000	
Email contact info: chadshazen@hazenconstruction.net	

SECTION 00300

BID RESPONSE FORM

Proposal of Hazen Construction, LLC, hereinafter called "Bidder", a Florida Corporation doing business as Hazen Construction, LLC to the City of Deltona, Florida hereafter called "Owner". The Bidder, in compliance with the Owner's invitation for bids for the construction of:

City of Deltona

ITB #PW-13-06

TIPTON DRIVE IMPROVEMENTS

having examined the plans and specifications with related documents and the site of the proposed work, and being familiar with all of the conditions surrounding the construction of the proposed project including the availability of materials and labor, hereby proposes to furnish all labor, materials, and supplies; and to construct the project in accordance with the Contract Documents, within the time set forth herein, and at the prices stated below. These prices are to cover all expenses incurred in performing the work required under the Contract Documents, of which this proposal is a part.

Bidder accepts all of the terms and conditions of the Advertisement for Bids and General Conditions, Instructions, and Information for Bidders.

Bidder hereby agrees to commence work under contract on or before a date to be specified in a written "Notice to Proceed" of the Owner and to substantially complete the Project within 120 consecutive calendar days and to fully complete the Project within 150 consecutive calendar days thereafter as stipulated in the specifications. Bidder further agrees to pay any liquidated damages, as specified in the Agreement, for each consecutive calendar day thereafter.

Bidder has examined and carefully studied the Bidding Documents and the following addendum receipt of which is hereby acknowledged:

No. 1	Dated: 3-8-13	No. _____	Dated: _____
No. _____	Dated: _____	No. _____	Dated: _____
No. _____	Dated: _____	No. _____	Dated: _____
No. _____	Dated: _____	No. _____	Dated: _____

BASE PROPOSAL: Bidder agrees to perform all of the work described in the specifications and shown on the plans for the sum shown in the schedule below:

Item No.	Description	Qty	Unit	Unit Price	Total Price
General Administrative					
1	Mobilization/Demobilization	1	LS	$ 7,500	$ 7,500.00
2	General Requirements, Bonds, Permits, etc.	1	LS	$ 5,000	$ 5,000.00
3	Indemnification	1	LS	$ 500	$ 500.00
4	Testing Allowance (Roadway and Pipe Compaction)	1	LS	$ 3,000	$ 3,000.00
Stormwater Sitework					
5	Layout and As-Built Survey	1	LS	$ 5,000	$ 5,000.00
6	Temporary Erosion Protection	1	LS	$ 2,500	$ 2,500.00
7	Maintenance of Traffic	1	LS	$ 4,500	$ 4,500.00
8	Clearing and Grubbing	1	LS	$ 10,000	$ 10,000.00
9	Site Grading	1	LS	$ 5,000	$ 5,000.00
10	Remove and Dispose Existing Drainage Inlets	4	EA	$ 500	$ 2,000.00
11	Remove and Dispose Existing Drainage Culverts	225	LF	$ 10	$ 2,250.00
12	Remove and Replace Driveway	90	SY	$ 30	$ 2,700.00
13	Remove and Replace Pavement	550	SY	$ 43	$ 23,650.00
14	Furnish and Install 14" x 23" Elliptical RCP	55	LF	$ 37	$ 2,035.00
15	Furnish and Install 18" Reinforced Concrete Pipe	55	LF	$ 35	$ 1,925.00
16	Furnish and Install 36" Reinforced Concrete Pipe (<10-ft depth)	775	LF	$ 53	$ 41,075.00
17	Furnish and Install 36" Reinforced Concrete Pipe (>10-ft depth)	275	LF	$ 60	$ 16,500.00
18	Type "C" Inlet	3	EA	$ 1,700	$ 5,100.00
19	Type "D" Inlet - 6-ft Alternate B	2	EA	$ 3,900	$ 7,800.00
20	Type "J" Manhole - 6-ft Alternate A (<10-ft depth)	2	EA	$ 3,600	$ 7,200.00
21	Type "J" Manhole - 6-ft Alternate A (>10-ft depth)	2	EA	$ 4,100	$ 8,200.00
22	Modified Type "H" Outfall Structure	1	EA	$ 3,800	$ 3,800.00
23	Furnish and Install 36" Headwall	1	EA	$ 3,200	$ 3,200.00
24	Furnish and Install Rip Rap	110	SY	$ 40	$ 4,400.00
Water Main Conflict					
25	45º Bend (FLG.)	4	EA	$ 400	$ 1,600.00
26	Furnish and Install PVC C900 Pipe (restrained joint)	35	LF	$ 32	$ 1,120.00
27	Remove and Replace Pavement Related to Water Main Conflict	40	SY	$ 43	$ 1,720.00
			TOTAL BASE BID	**$**	179,275.00

TOTAL BASE BID IN WORDS:

One hundred seventy nine thousand two hundred seventy five **DOLLARS AND** 00 **/100 CENTS**

The unit prices provided above shall include all labor, materials, bailing, shoring, removal, overhead, profit, insurance, etc., to cover the finished work of the several kinds required. Any changes to the Work after issuance of the Notice of Award shall be processed in accordance with Articles 10, 11, and 12 of the General Conditions (Section 00700) and Article 5 of the Agreement with the Owner.

Bidder understands that the Owner reserves the right to reject any or all bids and to waive any informalities in the bidding.

A bid security, attached in the sum of five (5) percent of the Total Bid Amount, is to become the property of the Owner in the event contract and bond are not executed within thirty (30) days of the Owner issuing a Notice of Award, as liquidated damages for the delay and additional expense to the Owner caused thereby.

Respectfully submitted:

By: Hazen Construction, LLC
(Business Name)

(SEAL - if bid is by corporation)

1599 Tionia Road
(Business Address)

New Smyrna Beach, FL 32168
(Business City, State, Zip Code)

(Signature)

Chad S Hazen
(Printed Name)

President
(Title)

SCHEDULE OF BASE BID MANUFACTURERS/SUPPLIERS
(SECTION 300A)

The Contract Documents are based upon the equipment or products available from the manufacturers/suppliers denoted as "A", "B", etc. However, the Bidder must indicate in his Bid which Base Bid manufacturer/supplier he intends to use for each item of equipment listed by circling one (1) of the listed manufacturers/suppliers. Should the Bidder fail to circle a named supplier, he hereby agrees to provide the item listed as "A". After receipt of bids, the Bidder may not substitute for any manufacturer or supplier circled. Listed manufacturers/suppliers identified as deductive alternates will be considered as a deductive alternate as presented in the Deductive Alternate Section of the Bid Form.

If the Bidder desires to propose one (1) or more substitution or "or equal" manufacturers/suppliers, he may write in the name of such substitution or "or equal" in the spaces provided on the pages following the lists, but he must, nevertheless, also circle one of the listed manufacturers/suppliers. All substitutions or "or equal" items must be identified at the time of Bid (see paragraph 6.7 of the General Conditions as amended by the Supplementary Conditions). Substitutions or "or equal" items will **not** be considered when determining the Apparent Lowest Bidder. Substitutions or "or equal" items will **not** be evaluated or considered until after the "Effective Date" of the Agreement. The Bidder shall base his Bid on providing one of the listed manufacturers/suppliers and shall assume for bidding purposes that all substitutions or "or equal" items will not be accepted.

If the proposed substitution or "or equal" manufacturer/supplier is determined "not equivalent" by the Engineer, the Bidder must use the circled manufacturer/supplier. If the Bidder fails to indicate which listed manufacturer/supplier he intends to use or if a substitution or an "or equal" is rejected, he must use the manufacturer/supplier listed as "A". Also, if the Bidder circles more than one listed manufacturer/supplier, he must use the first manufacturer/supplier circled (unless a substitution or "or equal" is approved).

Each proposed substitution or "or equal" will be evaluated in accordance with Paragraph 6.7 of the General Conditions as amended by the Supplementary Conditions following the Effective Date of the Agreement.

In addition to the reimbursement required under Paragraph 6.7 of the General Conditions, the Contractor shall also reimburse the Owner for any engineering costs directly attributable to the change in manufacturers/suppliers, caused by the acceptance of proposed substitution or "or equal" items, such as; additional field trips for the Engineer, additional redesign costs, and additional review costs, etc. Other costs directly attributable to the change in manufacturers/suppliers caused by the acceptance of proposed substitution or "or equal" items such as increased electrical requirements, larger building, modifications to structures, additional pumps, piping or tankage, etc., shall be borne by others and not by the Owner. Bidder further agrees that the use of substitute equipment offered will not affect the completion date.

The Owner may request, and the Bidder shall supply, complete information on proposed substitution or "or equal" items prior to the Notice of Award.

Category I - **SCHEDULE OF BASE BID MANUFACTURERS / SUPPLIERS (SECTION 300A)**

Item No.	Equipment Item or Material	Specification Section No.	Manufacturer/Supplier
1.	Pre. Cast Structures		Hanson
2.	RCP		County Materials
3.	HDPE		ADS
4.			
5.			
6.			
7.			

SUBSTITUTION LIST OF MANUFACTURERS / SUPPLIERS
(SECTION 00300B)

Bidder proposes the following substitutions and "or equal" items of alternate manufacturers/suppliers for the equipment of material categories so identified:

	Equipment Item Material	Drawing No.	Spec. Section	Substitute/"or equal" Manufacturer/Supplier (List One Only)	Proposed Price Deduct
1.	N/A				
2.					
3.					
4.					
5.					
6.					
7.					
9.					
10.					

SUBSTITUTIONS AND "OR EQUAL"

The above signed as Bidder agrees that substitutions or "or equal" items will not be considered until after the "Effective Date of the Agreement" and will be evaluated in accordance with Paragraphs 6.7, 6.7.1 and 6.7.2, of the General Conditions as amended by the Supplementary Conditions. If Bidder intends to propose substitutions or "or equal" items after the "Effective Date of the Agreement", it is agreed that these items will be listed on the Substitution List included with the Bid (form provided herein). Only the proposed substitutions or "or equal" items listed on the Substitution List will be evaluated by the Engineer in accordance with the General Conditions.

QUESTIONNAIRE FORM
(SECTION 00301)

DATE: 3-13-13

PROJECT IDENTIFICATION

City of Deltona – Public Works Division
TIPTON DRIVE IMPROVEMENTS

NAME OF BIDDER: Hazen Construction, LLC

BUSINESS ADDRESS: 1599 Tionia Road New Smyrna Beach, FL 32168

TELEPHONE NO: 386-322-8700

CONTRACTOR'S FLORIDA LICENSE NO: CGC061991 and CUC1223713

The signed bidder warrants the truth and accuracy of all statements and answers herein contained. Include additional sheets if necessary.

1. How many years has your organization been in business as a General Contractor? 11

2. Have you ever failed to complete work awarded to you? If so, where and why? No

3. Name three (3) municipalities or government entities for which you have performed similar projects as this one and to which you refer?
   City of Port Orange
   City of Ormond Beach
   City of Daytona Beach

4. Have you personally inspected the site of the proposed Work? Describe any anticipate problems with the site and your proposed solutions.
   Yes, none

5. Will you Subcontract any part of this Work? If so, describe which portion(s).
   Concrete
   Surveying

6. What equipment do you own that is available for the Work? (attach additional sheets if necessary)
Excavators, loaders, dozers, mini-hoes, sweeper, skid steers, pumps, and other misc. items needed

7. What equipment will you purchase for the Work?
None

8. What equipment will you rent for the Work?
None

9. The following is given as a summary of the Financial Statement of the undersigned: (List Assets and Liabilities and use insert sheet if necessary.)
See attached sheet

10. State the true and exact, correct, and complete name under which you do business.
Bidder is: Hazen Construction, LLC

Hazen Construction
Balance Sheet
As of January 31, 2013

	January 31, 2013
ASSETS	
Current Assets	
Total Checking/Savings	592,275.14
Total Accounts Receivable	2,429,519.74
Total Other Current Assets	455,500.00
Total Current Assets	3,477,294.88
Total Fixed Assets	647,569.50
Total Other Assets	77,109.22
TOTAL ASSETS	**4,201,973.60**
LIABILITIES & EQUITY	
Liabilities	
Current Liabilities	
Total Accounts Payable	706,540.27
Total Other Current Liabilities	1,003,731.80
Total Current Liabilities	1,710,272.07
Total Long Term Liabilities	7,056.55
Total Liabilities	1,717,328.62
Total Equity	2,484,644.98
TOTAL LIABILITIES & EQUITY	**4,201,973.60**

SUB-CONTRACTORS AND AFFILIATES FORM
(SECTION 00301A)

The following are a list of Sub Contractors or Affiliates that will be utilized in this project. Use additional sheets if necessary.

1. **Firm Name:** Greco's Concrete
   Trade: Concrete
   Firm Owner: Anthony Greco
   Firm Address: PO Box 587 Pierson, FL 32180
   Firm Phone Number: 386-749-2377

2. **Firm Name:** Oceanside Land Surveying
   Trade: Surveying
   Firm Owner: James Walker III
   Firm Address: 2090 S. Nova Road #A-107 S Daytona, FL 32119
   Firm Phone Number: 386-763-4130

3. **Firm Name:** _____
   Trade: _____
   Firm Owner: _____
   Firm Address: _____
   Firm Phone Number: _____

4. **Firm Name:** _____
   Trade: _____
   Firm Owner: _____
   Firm Address: _____
   Firm Phone Number: _____

5. **Firm Name:** _____
   Trade: _____
   Firm Owner: _____
   Firm Address: _____
   Firm Phone Number: _____

REFERENCES FORM
(SECTION 00301B)

The City of Deltona is seeking Contractors who have proven past, positive experiences in projects of similar and same size of scope of work. These references are required with your submittals. References shall contain the Owners contact information for the projects referenced. References with another Contractor listed as the Owner shall not be accepted. Contractors not having past, positive experiences in projects of similar and same size of scope of work, as the Prime Contractor, will not be considered. References which are located in foreign countries are not acceptable.

1. **Project Name:** Covington & Slater Drainage
   Project Value: 105,000
   Project Description: New storm drain in existing residential area
   Project Owner: City of Deltona
   Owner contact information: Gerald Chancellor 386-678-8998
   Project Location: Deltona, FL
   Project Start and End Dates: 04/10 - 07/10

2. **Project Name:** Westside Water Main
   Project Value: 260,000
   Project Description: New water main in existing residential area
   Project Owner: City of Deland
   Owner contact information: Keith Rigor 386-626-7197
   Project Location: Deland, FL
   Project Start and End Dates: 11/09 - 03/10

3. **Project Name:** Ernest Drive & Sugar Forest
   Project Value: 325,000
   Project Description: New water main in existing residential area
   Project Owner: City of Port Orange
   Owner contact information: Fred Griffith 386-506-5753
   Project Location: Port Orange, FL
   Project Start and End Dates: 07/09 - 02/10

4. **Project Name:** Misc. Water Mains
   Project Value: 430,000
   Project Description: New water main in existing residential area
   Project Owner: City of Deland
   Owner contact information: Keith Rigor 386-626-7197
   Project Location: Deland, FL
   Project Start and End Dates: 04/09 - 11/09

REFERENCES FORM
(SECTION 00301B CONTINUED)

5. **Project Name:** Business Park Drive
Project Value: 190,000
Project Description: New storm, sewer + water in existing industrial park
Project Owner: City of Ormond Beach
Owner contact information: Alex Blake 386-676-3306
Project Location: Ormond Beach, FL
Project Start and End Dates: 02/09 - 08/09

6. **Project Name:** Spring Hill
Project Value: 1,100,000
Project Description: New lift station, sewer + water in residential area
Project Owner: City of Deland
Owner contact information: Keith Rigor 386-626-7197
Project Location: Deland, FL
Project Start and End Dates: 10/08 - 11/09

7. **Project Name:** Gateway North
Project Value: 490,000
Project Description: New sewer, storm + water in commercial development
Project Owner: Consolidated Tomoka
Owner contact information: Steve Winchester 386-274-2202
Project Location: Daytona Beach, FL
Project Start and End Dates: 01/08 - 11/08

8. **Project Name:** Mason Commerce
Project Value: 260,000
Project Description: New sewer, storm + water in commercial development
Project Owner: Consolidated Tomoka
Owner contact information: Steve Winchester 386-274-2202
Project Location: Daytona Beach, FL
Project Start and End Dates: 02/08 - 09/08

BID BOND FORM
(SECTION 00410)

KNOWN ALL MEN BY THESE PRESENTS, that we, the undersigned, Hazen Construction, LLC as Principal, and Western Surety Company as Surety, are hereby held and firmly bound unto the City of Deltona, Florida as Owner in the penal sum of, (five percent 5%) of the Contract Bid FIVE percent of amount bid for the payment of which, well and truly to be made, we hereby and severally bind ourselves, successors and assigns to pay Owner upon default of Bidder the penal sum set forth on the face of this Bond. Signed, this 13th day of March, 20 13.

The condition of the above obligation is such that whereas the Principal has submitted to the City of Deltona, Florida a certain bid, attached hereto and hereby made a part hereof, to enter into a contract in writing, for the **TIPTON DRIVE IMPROVEMENTS.**

NOW THEREFORE,

1. Default of Bidder shall occur upon the failure of Bidder to deliver within the time required by the Bidding Documents the executed Agreement required by the Bidding Documents and any performance and payment bonds required by the Bidding Documents and Contract Documents.

2. This obligation shall be null and void if:

   2.1 Owner accepts Bidder's bid and Bidder delivers within the time required by the Bidding Documents (or an extension thereof agreed to in writing by Owner) the executed Agreement required by the Bidding Documents and any performance and payment bonds required by the Bidding Documents and Contract Documents, or

   2.2 All bids are rejected by Owner, or

   2.3 Owner fails to issue a notice of award to Bidder within the time specified in the Bidding Documents (or any extension thereof agreed to in writing by Bidder and, if applicable, consented to by Surety when required by paragraph 5 hereof).

3. Payment under this Bond will be due and Payable upon default of Bidder and within thirty (30) calendar days after receipt of Bidder and surety of written notice of default from Owner which notice will be given with reasonable promptness, identifying this Bond and the Project and including a statement of the amount due.

4. Surety waives notice of any and all defenses based on or arising out of any time extension to issue notice of award agreed to in writing by Owner and Bidder, providing that the time for issuing notice of award including extensions shall not in the aggregate exceed one hundred twenty (120) days from Bid Due without Surety's written consent.

5. No suite or action shall be commenced under this Bond prior to thirty (30) calendar days after the notice of default required in paragraph 3 above is received by Bidder and Surety, and in no case later than one year after Bid Due Date.

6. Any suite or action under this Bond shall be commenced only in a court of competent jurisdiction located in the state in which the Project is located.

7. Notice required hereunder shall be in writing and sent to Bidder and Surety at their respective addresses shown on the face of this Bond. Such notices may be sent by personal delivery, commercial courier or by United States Registered or Certified Mail, return receipt requested, postage pre-paid, and shall be deemed to be effective upon receipt by the part concerned.

8. Surety shall cause to be attached to this Bond a current and effective Power of Attorney evidencing the authority of the officer, agent or representative who executed this Bond on behalf of Surety to execute, seal and deliver such Bond and bind the Surety thereby.

9. This bond is intended to conform to all applicable statutory requirements. Any applicable requirement of any applicable statute that has been omitted from this Bond shall be deemed to be included herein as if set forth at length. If any provision of the Bond conflicts with any applicable provision of any applicable statute, then the provision of said statute shall govern and the remainder of the Bond that is not in conflict therewith shall continue in full force and effect.

10. The term "bid' as used herein includes a bid, offer or proposal as applicable.

IN WITNESS WHEREOF, the Principal and the Surety have hereunto set their hands and seals, and such of them as are corporations have caused their corporate seals to be hereto affixed and these presents to be signed by their proper officers, the day and year first set forth above.

Principal (Print Full Name):

Hazen Construction, LLC

By: _____ (LS)

Title: President

Attest: _____ Office Manager
Signature and Title

Surety (Print Full Name):

Western Surety Company (Seal)
Surety's Name and Corporate Seal

By: _____
Signature (attach power of attorney)

Title: Benjamin H. French, Attorney-In-Fact & Fla. Resident Agent

Attest: _____
-CSR Signature and Title

03/13/2013
(DATE)

IMPORTANT – Surety companies executing bonds must appear on the Treasury Department's most current list (Circular 570 as amended) and be authorized to transact business in the State of Florida.

Western Surety Company

POWER OF ATTORNEY APPOINTING INDIVIDUAL ATTORNEY-IN-FACT

Know All Men By These Presents, That WESTERN SURETY COMPANY, a South Dakota corporation, is a duly organized and existing corporation having its principal office in the City of Sioux Falls, and State of South Dakota, and that it does by virtue of the signature and seal herein affixed hereby make, constitute and appoint

Dale Waldorff, Benjamin H French, Pamela L Jarman, Paul A Locascio, K Wayne Walker, Sheree W Lewis, Rebekah G Wolf, Individually

of Fort Walton Beach, FL, its true and lawful Attorney(s)-in-Fact with full power and authority hereby conferred to sign, seal and execute for and on its behalf bonds, undertakings and other obligatory instruments of similar nature

- In Unlimited Amounts -

and to bind it thereby as fully and to the same extent as if such instruments were signed by a duly authorized officer of the corporation and all the acts of said Attorney, pursuant to the authority hereby given, are hereby ratified and confirmed.

This Power of Attorney is made and executed pursuant to and by authority of the By-Law printed on the reverse hereof, duly adopted, as indicated, by the shareholders of the corporation.

In Witness Whereof, WESTERN SURETY COMPANY has caused these presents to be signed by its Vice President and its corporate seal to be hereto affixed on this 26th day of October, 2012.

WESTERN SURETY COMPANY

Paul T. Bruflat, Vice President

State of South Dakota
County of Minnehaha } ss

On this 26th day of October, 2012, before me personally came Paul T. Bruflat, to me known, who, being by me duly sworn, did depose and say: that he resides in the City of Sioux Falls, State of South Dakota; that he is the Vice President of WESTERN SURETY COMPANY described in and which executed the above instrument; that he knows the seal of said corporation; that the seal affixed to the said instrument is such corporate seal; that it was so affixed pursuant to authority given by the Board of Directors of said corporation and that he signed his name thereto pursuant to like authority, and acknowledges same to be the act and deed of said corporation.

My commission expires
June 23, 2015

J. MOHR
NOTARY PUBLIC
SOUTH DAKOTA

J. Mohr, Notary Public

CERTIFICATE

I, L. Nelson, Assistant Secretary of WESTERN SURETY COMPANY do hereby certify that the Power of Attorney hereinabove set forth is still in force, and further certify that the By-Law of the corporation printed on the reverse hereof is still in force. In testimony whereof I have hereunto subscribed my name and affixed the seal of the said corporation this 13th day of March 2013

WESTERN SURETY COMPANY

L. Nelson, Assistant Secretary

Form F4280-7-2012

Authorizing By-Law

ADOPTED BY THE SHAREHOLDERS OF WESTERN SURETY COMPANY

This Power of Attorney is made and executed pursuant to and by authority of the following By-Law duly adopted by the shareholders of the Company.

Section 7. All bonds, policies, undertakings, Powers of Attorney, or other obligations of the corporation shall be executed in the corporate name of the Company by the President, Secretary, and Assistant Secretary, Treasurer, or any Vice President, or by such other officers as the Board of Directors may authorize. The President, any Vice President, Secretary, any Assistant Secretary, or the Treasurer may appoint Attorneys in Fact or agents who shall have authority to issue bonds, policies, or undertakings in the name of the Company. The corporate seal is not necessary for the validity of any bonds, policies, undertakings, Powers of Attorney or other obligations of the corporation. The signature of any such officer and the corporate seal may be printed by facsimile.

CORPORATE RESOLUTION FORM
(SECTION 00420)

I, Marc Hazen, Secretary of Hazen Construction, LLC, a corporation organized and existing under the laws of the State of Florida, hereby certify that at a meeting of the Board of Directors of the Corporation duly called and held on March 8, 2013 at which a quorum was present and acting throughout, the following resolutions were adopted and are now in full force effect:

RESOLVED that the following individuals of this corporation are authorized to execute on behalf of this corporation A Bid and Agreement to City of Deltona for the construction of Tipton Drive Improvements.

I further certify that the names of the officers of this corporation and any other persons authorized to act under this resolution and their official signatures are as follows:

NAME	OFFICE	OFFICIAL SIGNATURE
Chad S Hazen	President / Treasurer	
Marc Hazen	Vice-President / Secretary	Marc Hazen

IN WITNESS THEREOF, I have hereunto subscribed my name as Secretary and affixed the seal of the corporation this 8 day of March, 2013

HOLD HARMLESS AND INDEMNITY AGREEMENT
(SECTION 00430)

Hazen Construction, LLC, agrees through the signing of this document by an authorized party or agent that it shall defend, indemnify and hold harmless the City of Deltona, and its agents, employees, and public officials from and against all suits, losses, claims, demands, judgments of every name and description arising out of or incidental to the performance of this contract or work performed thereunder, whether or not due to or caused by the negligence of the City of Deltona, its agents, employees, and public officials excluding only the sole negligence of the City of Deltona, its agents, employees, and Public Officials.

This provision shall also pertain to any claims brought against the City of Deltona, its agents, employees, and public officials by an employee of the named Contractor, any Sub-contractor, or anyone directly or indirectly employed by any of them.

The Contractor's obligation to indemnify the City of Deltona, its agents, employees and public officials under this provision shall be limited to $1,000,000 per occurrence which the parties agree bears a reasonable commercial relationship to the contract.

The Contractor agrees to accept, and acknowledges as adequate remunerations, the consideration of $10, which is part of the agreed bid price, the promises contained herein, and other good and valuable consideration, the receipt of which is hereby acknowledged, for agreement to enter into this Hold Harmless and Indemnity Agreement.

CONTRACTOR Chad S Hazen
President

March 13, 2013
DATE

DRUG-FREE WORKPLACE FORM
(SECTION 00440)

The undersigned Bidder in accordance with Florida Statute 287.087, hereby certifies that Hazen Construction, LLC does:
(*Name of Business*)

1. Publish a statement notifying employees that the unlawful manufacture, distribution, dispensing, possession, or use of a controlled substance is prohibited in the workplace and specifying the actions that will be taken against employees for violations of such prohibition.

2. Inform employees about the dangers of drug abuse in the workplace, the business's policy of maintaining a drug-free workplace, any available drug counseling, rehabilitation, and employee assistance programs, and the penalties that may be imposed upon employees for drug abuse violations.

3. Give each employee engaged in providing the commodities or contractual services that are proposed a copy of the statement specified in subsection (1).

4. In the statement specified in subsection (1), notify the employees that, as a condition of working on the commodities or contractual services that are under bid, the employee will abide by the terms of the statement and will notify the employer of any conviction of, or plea of guilty or nolo contendere to, any violation of Chapter 893 or of any controlled substance law of the United States or any state, for a violation occurring in the workplace no later than five (5) days after such conviction.

5. Impose a sanction on, or require the satisfactory participation in a drug abuse assistance or rehabilitation program if such is available in the employee's community, by any employee who is so convicted.

6. Make a good faith effort to continue to maintain a drug-free workplace through implementation of this section.

As the person authorized to sign the statement, I certify that this firm complies fully with the above requirements.

X _____
Bidder's Signature Chad S Hazen, President

March 13, 2013
Date

PROPOSER'S CERTIFICATION FORM
(SECTION 00460)

I have carefully examined the Request for Proposal, Instructions to Proposers, General and/or Special Conditions, Vendor's Notes, Specifications, proposed agreement and any other documents accompanying or made a part of this Request for Proposal.

I hereby propose to furnish the goods or services specified in the Request for Proposal at the prices and rates quoted in my Proposal. I agree that my Proposal will remain firm for a period of up to one hundred twenty (120) days in order to allow the City adequate time to evaluate the Proposal.

I agree to abide by all conditions of the Proposal and understand that a background investigation may be conducted by the City of Deltona prior to award.

I certify that all information contained in this Proposal is truthful to the best of my knowledge and belief. I further certify that I am a duly authorized to submit this Proposal on behalf of the vendor / contractor as its act and deed and that the vendor / contractor is ready, willing and able to perform if awarded the contract.

I further certify, under oath, that this Proposal is made without prior understanding, agreement, connection, discussion, or collusion with any other person, firm or corporation submitting a Proposal for the same product or service; no officer, employee or agent of the City of Deltona Government or of any other Proposer interested in said Proposal; and that the undersigned executed this Proposer's Certification with full knowledge and understanding of the matters therein contained and was duly authorized to do so.

Name of Business: Hazen Construction, LLC

By: _____
Signature

Chad S Hazen
Name & Title, Typed or Printed

1599 Tionia Road
Mailing Address

New Smyrna Beach, FL 32168
City, State, Zip Code

(386) 322-8700
Telephone Number

Sworn to and subscribed before me

This 13 day of

March, 2013

_____
Signature of Notary

Notary Public, State of Florida

Personally known
-OR-
Produced Identification _____

MARNIE A HAZEN
Notary Public - State of Florida
My Comm. Expires Oct 14, 2013
Commission # DD 900590
Bonded Through National Notary Assn.

SWORN STATEMENT UNDER SECTION 287.133(3)(A), FLORIDA STATUTES, ON PUBLIC ENTITY CRIMES (SECTION 00470)

THIS FORM MUST BE SIGNED IN THE PRESENCE OF A NOTARY PUBLIC OR OTHER OFFICER AUTHORIZED TO ADMINISTER OATHS.

This sworn statement is submitted to the City of Deltona by Chad S Hazen, President
(Individual's name and title)

For Hazen Construction, LLC
(Name of entity submitting sworn statement)

Whose business address is 1599 Tionia Road
New Smyrna Beach, FL 32168

And (if applicable) its Federal Employer Identification Number (FEIN) is 01-0569979
(if the entity has no FEIN, include the Social Security Number of the individual signing this sworn statement)

1. I understand that a "public entity crime" as defined in Section 287.133(1)(g), Florida Statutes, means a violation of any State or Federal law by a person with respect to and directly related to the transaction of business with any public entity or with an agency or political subdivision of any other state or with the United States, including, but not limited to, any bid or contract for goods or services to be provided to any public entity or an agency or political subdivision of any other state or a of the United States and involving antitrust, fraud, theft, bribery, collusion, racketeering, conspiracy, or material misrepresentation.

11. I understand that "convicted" or "conviction" as defined in Paragraph 287.133(1)(b), Florida Statutes, means a finding of guilt or a conviction of a public entity crimes, with or without an adjudication of guilt, in any Federal or State trial court of record relating to charges brought by indictment or information after July 1, 1989, as a result of a jury verdict, non-jury trial, or entry of a plea of guilty or nolo contendere.

12. I understand that an "affiliate' as defined in Section 287.133(1)(a), Florida Statutes, means:

    A predecessor or successor of a person convicted of a public entity crime: or an entity under the control of any natural person who is active in the management of the entity and how has been convicted of a public entity crime. The term "affiliate" includes those officers, directors, executives, partners, shareholders, employees, members, and agents who are active in the management of an affiliate. The ownership by one (1) person of shares constituting a controlling interest in another person, or a pooling of equipment or income among persons when not for fair market value under an arm's length agreement, shall be a prima facie case that one person controls another person. A person who knowingly enters into a joint venture with a person who has been convicted of a public entity crime in Florida during the preceding thirty-six (36) months shall be considered an affiliate.

13. I understand that a "person" as defined in Section 287.133(1)(e), Florida Statutes, means any natural person or entity organized under the laws of any state or of the United States with the legal power to enter into a binding contract and which bids or applies to bid on contracts for the provision of goods or services let by a public entity, or which otherwise transacts or applies to transact business with a public entity. The term "person" includes those officers, directors, executives, partners, shareholders employees, members, and agents who are active in management of an entity.

14. Based on information and belief, the statement which I have marked below is true in relation to the entity submitting this sworn statement. (You must indicate which statement applies.)

(SECTION 00470 Continued)

__X__ Neither the entity submitting this sworn statement, nor any officers, directors, executives, partners, shareholders, employees, members, or agent who is active in management of the entity, nor the affiliate of the entity has been charged with and convicted of a public entity crime subsequent to July 1, 1989.

_____ The entity submitting this sworn statement, or one or more of the officers, directors, executives, partners, shareholders, employees, members or agent who are active in management of the entity, or an affiliate of the entity, has been charged with and convicted of a public entity crime subsequent to July 1, 1989.

_____ The entity submitting this sworn statement, or one or more of the officers, directors, executives, partners, shareholders, employees, members or agents who are active in management of the entity, or an affiliate of the entity, has been charged with and convicted of a public entity crime subsequent to July 1, 1989. However, there has been a subsequent proceeding before an Administrative Law Jury of the State of Florida, Division of Administrative Hearings and the Final Order entered by the Administrative Law Jury determined that it was not in the public interest to place the entity submitting this sworn statement on the convicted vendor list. (You must attach a copy of the final order).

I UNDERSTAND THAT THE SUBMISSION OF THIS FORM TO THE CITY OF DELTONA IS FOR THE CITY ONLY AND, THAT THIS FORM IS VALID THROUGH DECEMBER 31, OF THE CALENDAR YEAR IN WHICH IT IS FILED. I ALSO UNDERSTAND THAT I AM REQUIRED TO INFORM THE CITY PRIOR TO ENTERING IN TO A CONTRACT IN EXCESS OF THE THRESHOLD AMOUNT PROVIDED IN SECTION 287.017, FLORIDA STATUTES, FOR CATEGORY TWO OF ANY CHANGE IN THE INFORMATION CONTAINED IN THIS FORM.

_____
SIGNATURE

March 13, 2013
DATE

State of Florida
County of Volusia

Personally appeared before me, the undersigned authority, Chad S Hazen (name of individual signing) who, after first being sworn by me, affixed his/her signature in the space provided above on the 13 day of March, 2013.

_____
NOTARY PUBLIC

My commission expires:

MARNIE A HAZEN
Notary Public - State of Florida
My Comm. Expires Oct 14, 2013
Commission # DD 900590
Bonded Through National Notary Assn.

NON COLLUSION AFFIDAVIT FORM
(SECTION 00480)

STATE OF FLORIDA

COUNTY OF VOLUSIA

Chad S Hazen, being first duly sworn deposes and says that:

i. He/She is the President, of Hazen Construction, LLC the Bidder that has submitted the attached Bid;

ii. He/She is fully informed respecting the preparation and contents of the attached Bid and of all pertinent circumstances respecting such Bid;

iii. Such Bid is genuine and is not a collusive or sham Bid;

iv. Neither the said Bidder nor any of its officers, partners, owners, agents, representatives, employees, or parties in interest, including this affidavit, have in any way, colluded, conspired, connived or agreed, directly or indirectly, with any other Bidder, firm or person to submit a collusive or sham Bid in connection with the Contract for which the attached Bid has been submitted; or to refrain from bidding in connection with such Contract; or have in any manner, directly or indirectly, sought by agreement or collusion,, or communication, or conference with any Bidder, firm, or person to fix the price or prices in the attached Bid or of any other Bidder, or to fix any overhead, profit, or cost elements of the Bid price or the Bid price of any other Bidder, or to secure through any collusion, conspiracy, connivance, or unlawful agreement any advantage against (Recipient), or any person interested in the proposed Contract;

v. The price or prices quoted in the attached Bid are fair and proper and are not tainted by any collusion, conspiracy, connivance, or unlawful agreement on the part of the Bidder or any other of its agents, representatives, owners, employees or parties in interest, including this affidavit.

By _____

Sworn and subscribed to before me this 13 day of March, 2013, in the State of Florida, County of Volusia.

_____ Notary Public

My Commission expires:

MARNIE A HAZEN
Notary Public - State of Florida
My Comm. Expires Oct 14, 2013
Commission # DD 900590
Bonded Through National Notary Assn.

TRENCH SAFETY AFFIDAVIT FORM
(SECTION 00490)

(FAILURE TO COMPLETE THIS FORM MAY RESULT IN THE BID BEING DECLARED NON-RESPONSIVE)

Hazen Construction, LLC (NAME OF CONTRACTOR) hereby provides written assurance that compliance with applicable Trench Safety Standards identified in the Occupational Safety & Health Administration's Excavation Safety Standards (OSHA) 29 C.F.R.S. 1926.650 Subpart P will be adhered to during trench excavation in accordance with Florida Statutes 553.60 through 533.64 inclusive (1990) "Trench Safety Act".

The specific methods of compliance with applicable Trench Safety Standards, and the associated cost of compliance (costs included in the Bid Price), are as follows (attach additional sheets if necessary):

Item and Safety Measure	Cost
Trench Excavation	$ 2,000
	$
	$
	$
	$
	$
	$
TOTAL	$ 2,000.00

By the signature of its undersigned authorized representatives, the Bidder hereby assures the CITY OF DELTONA that any such excavation performed by the Bidder will be performed in compliance with all applicable trench safety standards.

By _____

Sworn and subscribed to before me this 13 day of March, 2013, in the State of Florida, County of Volusia.

_____ Notary Public

My Commission expires:

MARNIE A HAZEN
Notary Public - State of Florida
My Comm. Expires Oct 14, 2013
Commission # DD 900590
Bonded Through National Notary Assn.

ADDENDUM # 1

CITY OF DELTONA
BID # PW 13-06
March 8, 2013

TIPTON DRIVE IMPROVEMENTS

All contents of this addendum shall be incorporated into the solicitation documents and the ensuing contract with the awarded contractor.

This addendum is to answer questions and clarify issues that have been brought up during the solicitation process.

Questions and inquiries are being accepted up to seven days prior to the bid opening. The last day and time questions and RFI's for this bid will be accepted are Friday, March 8, 2013. Therefore, no further questions or RFI's will be accepted regarding this project.

Addendums may be issued up to 48 hours prior to the bid opening due time.

City of Deltona is not responsible for third party plan rooms or third party plan holders. All documents pertaining to this bid can be downloaded from www.demandstar.com

CLARIFICATIONS:

a. A bid bond is required for this solicitation.

b. The engineer's estimate for this project is $260,000.

c. Bids shall be mailed to or dropped off at 255 Enterprise Road, Deltona, Florida 32725. Bids shall not be accepted at City Hall.

d. A Payment and Performance Bond is required for this project from the awarded Contractor. Payment and Performance Bond is required to be registered with Volusia County prior to a Notice to Proceed being issued. Proof of registration with Volusia County is required.

e. Contract time is: Substantial completion is 120 days. 30 additional days to final completion. Total Project completion is 150 days. Contract time includes permitting and the entire scope of work to complete this project.

f. Liquidated damages will be in effect for this contract ($1,000 per day).

g. The Work shall be performed by a General Contractor Licensed in the State of Florida. Contract shall not be awarded unless proof of valid license(s) is provided.

h. The City of Deltona is seeking Contractors who have proven past, positive experiences in projects of similar and same size of scope of work as the Prime Contractor. Contractors who cannot prove past, positive experiences in projects of similar and same size of scope of work as the Prime Contractor will not be considered for award.

i. References are required with bid submittals. References shall contain descriptions of work that are of similar and same size of scope of work. 8 references are required with submittals. References shall contain the Owners contact information for the projects referenced. References with a Contractor listed as the Owner shall not be accepted.

j. There are two places shown on the plans with potential water main conflicts. The plans mention "size and depths shown are unknown." Please note that at Tradewinds and Cavern Terrace, Sheet C-101, the water main is 4" AC and is 2.50 feet deep. At Sheffield and Elida, Sheet C-102, the water main is 8" AC and is 4.0 feet deep.

k. There is a potential water main conflict at the intersection of Tradewinds and Sheffield, near the inlet identified as SD-12. It is not labeled on the drawings but the Bid Form will establish the unit prices for water main conflicts and the Contractor will be paid for actual installed quantities.

l. If water main deflection is required on an AC water main the existing pipe shall be restrained via a thrust collar installed in accordance with the City of Deltona Standard Details.

m. All pipe material related to this project is proposed as RCP. ADS N12 is a product approved by the City of Deltona as an alternative for pipe material identified as RCP. HDPE is acceptable for material placed in areas that are not under the road.

n. Restoration activities shall restore the swale in accordance with the detail provided in the documents.

o. Any details not shown within the plans or drawings shall follow the City of Deltona standards manual.

p. Should the awarded Contractor encounter sprinkler systems, planted vegetation or older utility lines within the right-of-way. The City of Deltona requires the awarded Contractor to be customer friendly in letting the citizen know ahead of time (1 week minimum) that if there is a sprinkler system or planted vegetation within the right-of-way they have the option to remove the items. Should the citizen not remove the items, the Contractor shall be required to cap any irrigation system and return the sprinkler heads to the citizen.

QUESTIONS:

Question # 1 – Is this a unit price bid or lump sum?

Answer # 1 – There are unit price items and lump sum items. Award of bid will be made to the lowest, responsive and responsible bidder who meets the criteria of this solicitation.

Question # 2 –What permits are involved with this project?

Answer # 1 – The St. Johns WMD permit has been obtained. The project appears to be too small for a Stormwater Pollution Prevention Permit (SWPP). Should the awarded Contractor need to clear some extra areas for storage, it shall be the awarded Contractors responsibility to obtain the SWPP permit. The City of Deltona does not issue right-of-way use permits for its own projects.

Question # 3 – What is the amount for the testing allowance??

Answer # 3 – The testing allowance is listed as $3,000.00.

The bid due date remains Wednesday, March 13, 2013 at 2:00 p.m. All prospective bidders are hereby instructed not to contact the Engineer of Record or any member of the City of Deltona Commission, City Manager, or City of Deltona Staff members other than the noted contact person regarding this Invitation to Bid or their bid proposal at any time during the solicitation or award process. Any such contact shall be cause for rejection of your bid proposal.

All inquiries are to be directed to the Purchasing Agent for the Public Works Division at the City of Deltona. Contact for this solicitation is: Brian Boehs, Purchasing Agent. Email address is bboehs@deltonafl.gov. Phone is 386-878-8955.

ALL OTHER SPECIFICATIONS AND CONDITIONS REMAIN UNCHANGED.

RECEIPT OF THIS ADDENDUM IS HEREBY ACKNOWLEDGED

Hazen Construction, LLC
NAME OF BUSINESS

BY: 3-13-13
SIGNATURE/DATE

Chad S Hazen, President
NAME & TITLE, TYPED OR PRINTED

1599 Tionia Road
MAILING ADDRESS

New Smyrna Beach, FL 32168
CITY, STATE, ZIP CODE

BIDDER'S CONTACT AND INFORMATION FORM
(SECTION 00110)

Bidder (Company) Name: R.A. Scott Construction Company	F. E. I. N. or SS Number: 59-2342071
Mailing Address: P.O. Box 9667	Street Address: 2509 Bellevue Avenue
City, State, Zip: Daytona Beach, Fl. 32120	City, State, Zip: Daytona Beach, Fl. 32114
Type of Entity: *(Circle one)* Corporation Partnership Proprietorship Joint Venture	*I hereby certify that this bid is made without prior understanding, agreement, or connection with any corporation, firm, or person submitting a bid for the same materials, supplies or equipment, and is in all respects fair and without collusion or fraud. I agree to abide by all conditions of this bid and certify that I am authorized to sign this bid for the Bidder.* X Mark A Scott Authorized Signature (Manual)
Incorporated in the State of: Florida Year: 1983	Typed or Printed Name: Mark A. Scott
Telephone Number: (386) 238-1234	Title: Presdient
Fax Number: (386) 238-7877	
Email contact info: rasccmas@cfl.rr.com	

SECTION 00300

BID RESPONSE FORM

Proposal of R.A. Scott Construction Company, hereinafter called "Bidder", a Florida Corporation doing business as an underground utilitiy contractor to the City of Deltona, Florida hereafter called "Owner". The Bidder, in compliance with the Owner's invitation for bids for the construction of:

City of Deltona

ITB #PW-13-06

TIPTON DRIVE IMPROVEMENTS

having examined the plans and specifications with related documents and the site of the proposed work, and being familiar with all of the conditions surrounding the construction of the proposed project including the availability of materials and labor, hereby proposes to furnish all labor, materials, and supplies; and to construct the project in accordance with the Contract Documents, within the time set forth herein, and at the prices stated below. These prices are to cover all expenses incurred in performing the work required under the Contract Documents, of which this proposal is a part.

Bidder accepts all of the terms and conditions of the Advertisement for Bids and General Conditions, Instructions, and Information for Bidders.

Bidder hereby agrees to commence work under contract on or before a date to be specified in a written "Notice to Proceed" of the Owner and to substantially complete the Project within 120 consecutive calendar days and to fully complete the Project within 150 consecutive calendar days thereafter as stipulated in the specifications. Bidder further agrees to pay any liquidated damages, as specified in the Agreement, for each consecutive calendar day thereafter.

Bidder has examined and carefully studied the Bidding Documents and the following addendum receipt of which is hereby acknowledged:

No. 1	Dated: March 8, 2013	No. _____	Dated: _____
No. _____	Dated: _____	No. _____	Dated: _____
No. _____	Dated: _____	No. _____	Dated: _____
No. _____	Dated: _____	No. _____	Dated: _____

BASE PROPOSAL: Bidder agrees to perform all of the work described in the specifications and shown on the plans for the sum shown in the schedule below:

Item No.	Description	Qty	Unit	Unit Price	Total Price
General Administrative					
1	Mobilization/Demobilization	1	LS	$14,900.00	$14,900.00
2	General Requirements, Bonds, Permits, etc.	1	LS	$6,500.00	$6,500.00
3	Indemnification	1	LS	$1,000.00	$1,000.00
4	Testing Allowance (Roadway and Pipe Compaction)	1	LS	$3,000.00	$3,000.00
Stormwater Sitework					
5	Layout and As-Built Survey	1	LS	$7,400.00	$7,400.00
6	Temporary Erosion Protection	1	LS	$3,500.00	$3,500.00
7	Maintenance of Traffic	1	LS	$8,650.00	$8,650.00
8	Clearing and Grubbing	1	LS	$4,500.00	$4,500.00
9	Site Grading	1	LS	$19,500.00	$19,500.00
10	Remove and Dispose Existing Drainage Inlets	4	EA	$350.00	$1,400.00
11	Remove and Dispose Existing Drainage Culverts	225	LF	$10.00	$2,250.00
12	Remove and Replace Driveway	90	SY	$40.00	$3,600.00
13	Remove and Replace Pavement	550	SY	$50.00	$27,500.00
14	Furnish and Install 14" x 23" Elliptical RCP	55	LF	$78.00	$4,290.00
15	Furnish and Install 18" Reinforced Concrete Pipe	55	LF	$72.00	$3,960.00
16	Furnish and Install 36" Reinforced Concrete Pipe (<10-ft depth)	775	LF	$104.00	$80,600.00
17	Furnish and Install 36" Reinforced Concrete Pipe (>10-ft depth)	275	LF	$130.00	$35,750.00
18	Type "C" Inlet	3	EA	$2,750.00	$8,250.00
19	Type "D" Inlet - 6-ft Alternate B	2	EA	$4,500.00	$9,000.00
20	Type "J" Manhole - 6-ft Alternate A (<10-ft depth)	2	EA	$4,750.00	$9,500.00
21	Type "J" Manhole - 6-ft Alternate A (>10-ft depth)	2	EA	$6,750.00	$13,500.00
22	Modified Type "H" Outfall Structure	1	EA	$4,750.00	$4,750.00
23	Furnish and Install 36" Headwall	1	EA	$5,500.00	$5,500.00
24	Furnish and Install Rip Rap	110	SY	$150.00	$16,500.00
Water Main Conflict					
25	45º Bend (FLG.)	4	EA	$350.00	$1,400.00
26	Furnish and Install PVC C900 Pipe (restrained joint)	35	LF	$80.00	$2,800.00
27	Remove and Replace Pavement Related to Water Main Conflict	40	SY	$50.00	$2,000.00
			TOTAL BASE BID	$301,500.00	

TOTAL BASE BID IN WORDS:

Three hundred one thousand five hundred **DOLLARS AND** 00 **/100 CENTS**

The unit prices provided above shall include all labor, materials, bailing, shoring, removal, overhead, profit, insurance, etc., to cover the finished work of the several kinds required. Any changes to the Work after issuance of the Notice of Award shall be processed in accordance with Articles 10, 11, and 12 of the General Conditions (Section 00700) and Article 5 of the Agreement with the Owner.

Bidder understands that the Owner reserves the right to reject any or all bids and to waive any informalities in the bidding.

A bid security, attached in the sum of five (5) percent of the Total Bid Amount, is to become the property of the Owner in the event contract and bond are not executed within thirty (30) days of the Owner issuing a Notice of Award, as liquidated damages for the delay and additional expense to the Owner caused thereby.

Respectfully submitted:

By: R.A. Scott Construction Company
(Business Name)

(SEAL - if bid is by corporation)

P.O. Box 9667
(Business Address)

Daytona Beach, Fl. 32120
(Business City, State, Zip Code)

(Signature)

Mark A. Scott
(Printed Name)

President
(Title)

SCHEDULE OF BASE BID MANUFACTURERS/SUPPLIERS
(SECTION 300A)

The Contract Documents are based upon the equipment or products available from the manufacturers/suppliers denoted as "A", "B", etc. However, the Bidder must indicate in his Bid which Base Bid manufacturer/supplier he intends to use for each item of equipment listed by circling one (1) of the listed manufacturers/suppliers. Should the Bidder fail to circle a named supplier, he hereby agrees to provide the item listed as "A". After receipt of bids, the Bidder may not substitute for any manufacturer or supplier circled. Listed manufacturers/suppliers identified as deductive alternates will be considered as a deductive alternate as presented in the Deductive Alternate Section of the Bid Form.

If the Bidder desires to propose one (1) or more substitution or "or equal" manufacturers/suppliers, he may write in the name of such substitution or "or equal" in the spaces provided on the pages following the lists, but he must, nevertheless, also circle one of the listed manufacturers/suppliers. All substitutions or "or equal" items must be identified at the time of Bid (see paragraph 6.7 of the General Conditions as amended by the Supplementary Conditions). Substitutions or "or equal" items will **not** be considered when determining the Apparent Lowest Bidder. Substitutions or "or equal" items will **not** be evaluated or considered until after the "Effective Date" of the Agreement. The Bidder shall base his Bid on providing one of the listed manufacturers/suppliers and shall assume for bidding purposes that all substitutions or "or equal" items will not be accepted.

If the proposed substitution or "or equal" manufacturer/supplier is determined "not equivalent" by the Engineer, the Bidder must use the circled manufacturer/supplier. If the Bidder fails to indicate which listed manufacturer/supplier he intends to use or if a substitution or an "or equal" is rejected, he must use the manufacturer/supplier listed as "A". Also, if the Bidder circles more than one listed manufacturer/supplier, he must use the first manufacturer/supplier circled (unless a substitution or "or equal" is approved).

Each proposed substitution or "or equal" will be evaluated in accordance with Paragraph 6.7 of the General Conditions as amended by the Supplementary Conditions following the Effective Date of the Agreement.

In addition to the reimbursement required under Paragraph 6.7 of the General Conditions, the Contractor shall also reimburse the Owner for any engineering costs directly attributable to the change in manufacturers/suppliers, caused by the acceptance of proposed substitution or "or equal" items, such as; additional field trips for the Engineer, additional redesign costs, and additional review costs, etc. Other costs directly attributable to the change in manufacturers/suppliers caused by the acceptance of proposed substitution or "or equal" items such as increased electrical requirements, larger building, modifications to structures, additional pumps, piping or tankage, etc., shall be borne by others and not by the Owner. Bidder further agrees that the use of substitute equipment offered will not affect the completion date.

The Owner may request, and the Bidder shall supply, complete information on proposed substitution or "or equal" items prior to the Notice of Award.

Category I - **SCHEDULE OF BASE BID MANUFACTURERS / SUPPLIERS (SECTION 300A)**

Item No.	Equipment Item or Material	Specification Section No.	Manufacturer/Supplier
1.	Reinforced Concrete Pipe	03612	Rinker Concrete Pipe Co.
2.	PVC Pipe	15050	HD Supply Waterworks
3.	DI Fittings & Acces.	15050	HD Supply Waterworks
4.	Precast Concrete Structures	03410	Hanson Pipe & Precast
5.			
6.			
7.			

SUBSTITUTION LIST OF MANUFACTURERS / SUPPLIERS
(SECTION 00300B)

Bidder proposes the following substitutions and "or equal" items of alternate manufacturers/suppliers for the equipment of material categories so identified:

	Equipment Item Material	Drawing No.	Spec. Section	Substitute/"or equal" Manufacturer/Supplier (List One Only)	Proposed Price Deduct
1.	No substitutions proposed				
2.					
3.					
4.					
5.					
6.					
7.					
9.					
10.					

SUBSTITUTIONS AND "OR EQUAL"

The above signed as Bidder agrees that substitutions or "or equal" items will not be considered until after the "Effective Date of the Agreement" and will be evaluated in accordance with Paragraphs 6.7, 6.7.1 and 6.7.2, of the General Conditions as amended by the Supplementary Conditions. If Bidder intends to propose substitutions or "or equal" items after the "Effective Date of the Agreement", it is agreed that these items will be listed on the Substitution List included with the Bid (form provided herein). Only the proposed substitutions or "or equal" items listed on the Substitution List will be evaluated by the Engineer in accordance with the General Conditions.

QUESTIONNAIRE FORM
(SECTION 00301)

DATE: March 12, 2013

PROJECT IDENTIFICATION **City of Deltona – Public Works Division**
TIPTON DRIVE IMPROVEMENTS

NAME OF BIDDER: R.A. Scott Construction Company

BUSINESS ADDRESS: P.O. Box 9667, Daytona Beach, Fl. 32120

TELEPHONE NO: (386) 238-1234

CONTRACTOR'S FLORIDA LICENSE NO: CUC049487

The signed bidder warrants the truth and accuracy of all statements and answers herein contained. Include additional sheets if necessary.

1. How many years has your organization been in business as a General Contractor? 30

2. Have you ever failed to complete work awarded to you? If so, where and why?
   No

3. Name three (3) municipalities or government entities for which you have performed similar projects as this one and to which you refer?
   City of Port Orange Mr. Kenny Ho, P.E. (386) 506-5754
   City of Ocoee Mr. Charles Smith, P.E. (407) 905-3100
   City of Ormond Beach Mr. Mark Veenstra, P.E. (386) 274-2828

4. Have you personally inspected the site of the proposed Work? Describe any anticipate problems with the site and your proposed solutions.
   Yes. No problems anticipated at this time

5. Will you Subcontract any part of this Work? If so, describe which portion(s).
   Yes. The traffic control signage, asphalt roadway repair and survey services

6. What equipment do you own that is available for the Work? (attach additional sheets if necessary)
All owned equipment

7. What equipment will you purchase for the Work?
None anticipated

8. What equipment will you rent for the Work?
Any equipment that is needed and not owned

9. The following is given as a summary of the Financial Statement of the undersigned: (List Assets and Liabilities and use insert sheet if necessary.)

10. State the true and exact, correct, and complete name under which you do business.
Bidder is: R.A. Scott Construction Company

SUB-CONTRACTORS AND AFFILIATES FORM
(SECTION 00301A)

The following are a list of Sub Contractors or Affiliates that will be utilized in this project. Use additional sheets if necessary.

1. **Firm Name:** Better Barricades, Inc.
   Trade: Traffic Control Signage
   Firm Owner: Mrs. Abbie Naff
   Firm Address: 1725 Tionia Road, New Smyrna Beach, Fl. 32168
   Firm Phone Number: (386) 427-4971

2. **Firm Name:** P&S Paving, Inc.
   Trade: Asphalt Roadway Repairs
   Firm Owner: Mr. Todd Phillips & Mr. Tim Phillips
   Firm Address: 3701 Olson Drive, Daytona Beach, Fl. 32124
   Firm Phone Number: (386) 258-7911

3. **Firm Name:** Oceanside Land Surveying, L.L.C.
   Trade: Survey Services
   Firm Owner: Mr. Chris Hanson
   Firm Address: 2090 S. Nova Road, nit A-107, South Daytona, Fl. 32119
   Firm Phone Number: (386) 763-4130

4. **Firm Name:** _____
   Trade: _____
   Firm Owner: _____
   Firm Address: _____
   Firm Phone Number: _____

5. **Firm Name:** _____
   Trade: _____
   Firm Owner: _____
   Firm Address: _____
   Firm Phone Number: _____

REFERENCES FORM
(SECTION 00301B)

The City of Deltona is seeking Contractors who have proven past, positive experiences in projects of similar and same size of scope of work. These references are required with your submittals. References shall contain the Owners contact information for the projects referenced. References with another Contractor listed as the Owner shall not be accepted. Contractors not having past, positive experiences in projects of similar and same size of scope of work, as the Prime Contractor, will not be considered. References which are located in foreign countries are not acceptable.

1. **Project Name:** Hanger 1996 Sewer Improvements
   Project Value: $72,000
   Project Description: Sewer main extension with laterals and restoration
   Project Owner: City of New Smyrna Beach
   Owner contact information: Mr. Brian Pendleton, P.E. (321) 633-3034
   Project Location: New Smyrna Beach Airport
   Project Start and End Dates: 11/12 - 1/13

2. **Project Name:** Taxiway 'B' Rehabilitation
   Project Value: $174,400
   Project Description: Storm drainage removal and replacement
   Project Owner: Titusville- Cocoa Airport Authjority
   Owner contact information: Mr. Brian Pendleton, P.E. (321) 633-3034
   Project Location: Space Coast Regional Airport
   Project Start and End Dates: 12/12 - 2/13

3. **Project Name:** 18" Water Main Repair at Dunlawton & Yortowne B-19 Canal
   Project Value: $99,900
   Project Description: Installation of a new 18" water main and restoration
   Project Owner: City of Port Orange
   Owner contact information: Mr. Kenny Ho, P.E. (386) 506-5754
   Project Location: Dunlawton Ave. Port Orange
   Project Start and End Dates: 10/12 - 11/12

4. **Project Name:** Port Orange Landings - Phase 2 Tributary 1 Crossing
   Project Value: $123,895
   Project Description: Water main and roadway crossing of canal
   Project Owner: Holiday Builders, Inc.
   Owner contact information: Mr. Richard Fadil (321) 610-5168
   Project Location: Oakbrook Subdivision Port Orange
   Project Start and End Dates: 10/10 - 1/11

REFERENCES FORM
(SECTION 00301B CONTINUED)

5. **Project Name:** Liftstation #35 Rehab
Project Value: $119,000
Project Description: Rehabilitation of an existing sewage lift station
Project Owner: City of Ocoee
Owner contact information: Mr. Charles Smith, P.E. (407) 905-3100
Project Location: Oaks Mall City of Ocoee
Project Start and End Dates: 9/10 - 11/10

6. **Project Name:** Liftstation #12 Relocation
Project Value: $482,897
Project Description: Installation of new liftstation and removal of an existing station
Project Owner: City of Altamonte Springs
Owner contact information: Mr. Robert Green (407) 571-8533
Project Location: Altamonte Springs
Project Start and End Dates: 6/10 - 11/10

7. **Project Name:** 16" Reclaimed Water Main Extension
Project Value: $194,000
Project Description: Reclaimed water main extension including restoration
Project Owner: City of Ocoee
Owner contact information: Mr. Charles Smith, P.E. (407) 905-3100
Project Location: Blackwood Avenue Ocoee
Project Start and End Dates: 8/09 - 11/09

8. **Project Name:** Division Avenue Roadway Construction
Project Value: $546,700
Project Description: Installation of new storm drainage, water main & roadway
Project Owner: City of Ormond Beach
Owner contact information: Mr. Mark Veenstra, P.E. (386) 274-2828
Project Location: Division Avenue Ormond Beach
Project Start and End Dates: 8/09 - 12/09

Executed in 2 Counterparts

BID BOND FORM
(SECTION 00410)

KNOWN ALL MEN BY THESE PRESENTS, that we, the undersigned, R.A. Scott Construction Company as Principal, and The Ohio Casualty Insurance Company as Surety, are hereby held and firmly bound unto the City of Deltona, Florida as Owner in the penal sum of, (five percent 5%) of the Contract Bid ITB #PW 13-06 for the payment of which, well and truly to be made, we hereby and severally bind ourselves, successors and assigns to pay Owner upon default of Bidder the penal sum set forth on the face of this Bond. Signed, this 13th day of March, 2013.

The condition of the above obligation is such that whereas the Principal has submitted to the City of Deltona, Florida a certain bid, attached hereto and hereby made a part hereof, to enter into a contract in writing, for the **TIPTON DRIVE IMPROVEMENTS.**

NOW THEREFORE,

1. Default of Bidder shall occur upon the failure of Bidder to deliver within the time required by the Bidding Documents the executed Agreement required by the Bidding Documents and any performance and payment bonds required by the Bidding Documents and Contract Documents.

2. This obligation shall be null and void if:

   2.1 Owner accepts Bidder's bid and Bidder delivers within the time required by the Bidding Documents (or an extension thereof agreed to in writing by Owner) the executed Agreement required by the Bidding Documents and any performance and payment bonds required by the Bidding Documents and Contract Documents, or

   2.2 All bids are rejected by Owner, or

   2.3 Owner fails to issue a notice of award to Bidder within the time specified in the Bidding Documents (or any extension thereof agreed to in writing by Bidder and, if applicable, consented to by Surety when required by paragraph 5 hereof).

3. Payment under this Bond will be due and Payable upon default of Bidder and within thirty (30) calendar days after receipt of Bidder and surety of written notice of default from Owner which notice will be given with reasonable promptness, identifying this Bond and the Project and including a statement of the amount due.

4. Surety waives notice of any and all defenses based on or arising out of any time extension to issue notice of award agreed to in writing by Owner and Bidder, providing that the time for issuing notice of award including extensions shall not in the aggregate exceed one hundred twenty (120) days from Bid Due without Surety's written consent.

5. No suite or action shall be commenced under this Bond prior to thirty (30) calendar days after the notice of default required in paragraph 3 above is received by Bidder and Surety, and in no case later than one year after Bid Due Date.

6. Any suite or action under this Bond shall be commenced only in a court of competent jurisdiction located in the state in which the Project is located.

7. Notice required hereunder shall be in writing and sent to Bidder and Surety at their respective addresses shown on the face of this Bond. Such notices may be sent by personal delivery, commercial courier or by United States Registered or Certified Mail, return receipt requested, postage pre-paid, and shall be deemed to be effective upon receipt by the part concerned.

8. Surety shall cause to be attached to this Bond a current and effective Power of Attorney evidencing the authority of the officer, agent or representative who executed this Bond on behalf of Surety to execute, seal and deliver such Bond and bind the Surety thereby.

9. This bond is intended to conform to all applicable statutory requirements. Any applicable requirement of any applicable statute that has been omitted from this Bond shall be deemed to be included herein as if set forth at length. If any provision of the Bond conflicts with any applicable provision of any applicable statute, then the provision of said statute shall govern and the remainder of the Bond that is not in conflict therewith shall continue in full force and effect.

10. The term "bid' as used herein includes a bid, offer or proposal as applicable.

IN WITNESS WHEREOF, the Principal and the Surety have hereunto set their hands and seals, and such of them as are corporations have caused their corporate seals to be hereto affixed and these presents to be signed by their proper officers, the day and year first set forth above.

Principal (Print Full Name):

R.A. Scott Construction Company

By: Mark A. Scott (LS)
Mark A. Scott

Title: President

Attest: Heather D. Gardner
Signature and Title

Surety (Print Full Name):

The Ohio Casualty Insurance Company (Seal)
Surety's Name and Corporate Seal

By: Don Bramlage
Signature (attach power of attorney) Don Bramlage

Title: Attorney-In-Fact & FL Licensed Resident Agent

Attest: Anita Navarra
Signature and Title Anita Navarra, Witness

March 13, 2013
(DATE)

Inquiries: 386-898-0507

IMPORTANT – Surety companies executing bonds must appear on the Treasury Department's most current list (Circular 570 as amended) and be authorized to transact business in the State of Florida.

THIS POWER OF ATTORNEY IS NOT VALID UNLESS IT IS PRINTED ON RED BACKGROUND.
This Power of Attorney limits the acts of those named herein, and they have no authority to bind the Company except in the manner and to the extent herein stated.

Certificate No. 5936111

American Fire and Casualty Company
The Ohio Casualty Insurance Company
Liberty Mutual Insurance Company
West American Insurance Company

POWER OF ATTORNEY

KNOWN ALL PERSONS BY THESE PRESENTS: That American Fire & Casualty Company and The Ohio Casualty Insurance Company are corporations duly organized under the laws of the State of New Hampshire, that Liberty Mutual Insurance Company is a corporation duly organized under the laws of the State of Massachusetts, and West American Insurance Company is a corporation duly organized under the laws of the State of Indiana (herein collectively called the "Companies"), pursuant to and by authority herein set forth, does hereby name, constitute and appoint, Cheryl Foley; Don Bramlage; Gloria A. Richards; Jeffrey W. Reich; Kim E. Niv; Leslie M. Donahue; Lisa Roseland; Patricia L. Slaughter; Susan L. Reich; Teresa L. Durham

all of the city of MAITLAND, state of FL each individually if there be more than one named, its true and lawful attorney-in-fact to make, execute, seal, acknowledge and deliver, for and on its behalf as surety and as its act and deed, any and all undertakings, bonds, recognizances and other surety obligations, in pursuance of these presents and shall be as binding upon the Companies as if they have been duly signed by the president and attested by the secretary of the Companies in their own proper persons.

IN WITNESS WHEREOF, this Power of Attorney has been subscribed by an authorized officer or official of the Companies and the corporate seals of the Companies have been affixed thereto this 7th day of January, 2013.

American Fire and Casualty Company
The Ohio Casualty Insurance Company
Liberty Mutual Insurance Company
West American Insurance Company

By: Gregory W. Davenport
Gregory W. Davenport, Assistant Secretary

STATE OF WASHINGTON ss
COUNTY OF KING

On this 7th day of January, 2013, before me personally appeared Gregory W. Davenport, who acknowledged himself to be the Assistant Secretary of American Fire and Casualty Company, Liberty Mutual Insurance Company, The Ohio Casualty Company, and West American Insurance Company, and that he, as such, being authorized so to do, execute the foregoing instrument for the purposes therein contained by signing on behalf of the corporations by himself as a duly authorized officer.

IN WITNESS WHEREOF, I have hereunto subscribed my name and affixed my notarial seal at Seattle, Washington, on the day and year first above written.

By: KD Riley
KD Riley , Notary Public

This Power of Attorney is made and executed pursuant to and by authority of the following By-laws and Authorizations of American Fire and Casualty Company, The Ohio Casualty Insurance Company, Liberty Mutual Insurance Company, and West American Insurance Company which resolutions are now in full force and effect reading as follows:

ARTICLE IV – OFFICERS – Section 12. Power of Attorney. Any officer or other official of the Corporation authorized for that purpose in writing by the Chairman or the President, and subject to such limitation as the Chairman or the President may prescribe, shall appoint such attorneys-in-fact, as may be necessary to act in behalf of the Corporation to make, execute, seal, acknowledge and deliver as surety any and all undertakings, bonds, recognizances and other surety obligations. Such attorneys-in-fact, subject to the limitations set forth in their respective powers of attorney, shall have full power to bind the Corporation by their signature and execution of any such instruments and to attach thereto the seal of the Corporation. When so executed, such instruments shall be as binding as if signed by the President and attested to by the Secretary. Any power or authority granted to any representative or attorney-in-fact under the provisions of this article may be revoked at any time by the Board, the Chairman, the President or by the officer or officers granting such power or authority.

ARTICLE XIII – Execution of Contracts – SECTION 5. Surety Bonds and Undertakings. Any officer of the Company authorized for that purpose in writing by the chairman or the president, and subject to such limitations as the chairman or the president may prescribe, shall appoint such attorneys-in-fact, as may be necessary to act in behalf of the Company to make, execute, seal, acknowledge and deliver as surety any and all undertakings, bonds, recognizances and other surety obligations. Such attorneys-in-fact subject to the limitations set forth in their respective powers of attorney, shall have full power to bind the Company by their signature and execution of any such instruments and to attach thereto the seal of the Company. When so executed such instruments shall be as binding as if signed by the president and attested by the secretary.

Certificate of Designation – The President of the Company, acting pursuant to the Bylaws of the Company, authorizes Gregory W. Davenport, Assistant Secretary to appoint such attorneys-in-fact as may be necessary to act on behalf of the Company to make, execute, seal, acknowledge and deliver as surety any and all undertakings, bonds, recognizances and other surety obligations.

Authorization – By unanimous consent of the Company's Board of Directors, the Company consents that facsimile or mechanically reproduced signature of any assistant secretary of the Company, wherever appearing upon a certified copy of any power of attorney issued by the Company in connection with surety bonds, shall be valid and binding upon the Company with the same force and effect as though manually affixed.

I, David M. Carey, the undersigned, Assistant Secretary, of American Fire and Casualty Company, The Ohio Casualty Insurance Company, Liberty Mutual Insurance Company, and West American Insurance Company do hereby certify that the original power of attorney of which the foregoing is a full, true and correct copy of the Power of Attorney executed by said Companies, is in full force and effect and has not been revoked.

IN TESTIMONY WHEREOF, I have hereunto set my hand and affixed the seals of said Companies this 13th day of March, 2013.

By: David M. Carey
David M. Carey, Assistant Secretary

Not valid for mortgage, note, loan, letter of credit, bank deposit, currency rate, interest rate or residual value guarantees.

To confirm the validity of this Power of Attorney call 1-610-832-8240 between 9:00 am and 4:30 pm EST on any business day.

CORPORATE RESOLUTION FORM
(SECTION 00420)

I, Heather S. Gardner, Secretary of R.A. Scott Construction Company, a corporation organized and existing under the laws of the State of Florida, hereby certify that at a meeting of the Board of Directors of the Corporation duly called and held on March 12, 2013 at which a quorum was present and acting throughout, the following resolutions were adopted and are now in full force effect:

RESOLVED that the following individuals of this corporation are authorized to execute on behalf of this corporation A Bid and Agreement to City of Deltona for the construction of Tipton Drive Improvements ITB #PW 13-06.

I further certify that the names of the officers of this corporation and any other persons authorized to act under this resolution and their official signatures are as follows:

NAME	OFFICE	OFFICIAL SIGNATURE
Mark A. Scott	President	Mark A. Scott
Brian W. Scott	Vice-President	Brian W. Scott
Heather S. Gardner	Secretary	Heather S. Gardner

IN WITNESS THEREOF, I have hereunto subscribed my name as Secretary and affixed the seal of the corporation this 12th day of March, 2013

HOLD HARMLESS AND INDEMNITY AGREEMENT
(SECTION 00430)

R.A. Scott Construction Co, agrees through the signing of this document by an authorized party or agent that it shall defend, indemnify and hold harmless the City of Deltona, and its agents, employees, and public officials from and against all suits, losses, claims, demands, judgments of every name and description arising out of or incidental to the performance of this contract or work performed thereunder, whether or not due to or caused by the negligence of the City of Deltona, its agents, employees, and public officials excluding only the sole negligence of the City of Deltona, its agents, employees, and Public Officials.

This provision shall also pertain to any claims brought against the City of Deltona, its agents, employees, and public officials by an employee of the named Contractor, any Sub-contractor, or anyone directly or indirectly employed by any of them.

The Contractor's obligation to indemnify the City of Deltona, its agents, employees and public officials under this provision shall be limited to $1,000,000 per occurrence which the parties agree bears a reasonable commercial relationship to the contract.

The Contractor agrees to accept, and acknowledges as adequate remunerations, the consideration of $10, which is part of the agreed bid price, the promises contained herein, and other good and valuable consideration, the receipt of which is hereby acknowledged, for agreement to enter into this Hold Harmless and Indemnity Agreement.

Mark A. Scott
CONTRACTOR

March 12, 2013
DATE

DRUG-FREE WORKPLACE FORM
(SECTION 00440)

The undersigned Bidder in accordance with Florida Statute 287.087, hereby certifies that

R.A. Scott Construction Co. does:
(*Name of Business*)

1. Publish a statement notifying employees that the unlawful manufacture, distribution, dispensing, possession, or use of a controlled substance is prohibited in the workplace and specifying the actions that will be taken against employees for violations of such prohibition.

2. Inform employees about the dangers of drug abuse in the workplace, the business's policy of maintaining a drug-free workplace, any available drug counseling, rehabilitation, and employee assistance programs, and the penalties that may be imposed upon employees for drug abuse violations.

3. Give each employee engaged in providing the commodities or contractual services that are proposed a copy of the statement specified in subsection (1).

4. In the statement specified in subsection (1), notify the employees that, as a condition of working on the commodities or contractual services that are under bid, the employee will abide by the terms of the statement and will notify the employer of any conviction of, or plea of guilty or nolo contendere to, any violation of Chapter 893 or of any controlled substance law of the United States or any state, for a violation occurring in the workplace no later than five (5) days after such conviction.

5. Impose a sanction on, or require the satisfactory participation in a drug abuse assistance or rehabilitation program if such is available in the employee's community, by any employee who is so convicted.

6. Make a good faith effort to continue to maintain a drug-free workplace through implementation of this section.

As the person authorized to sign the statement, I certify that this firm complies fully with the above requirements.

X Mark A Scott
Bidder's Signature

March 12, 2013
Date

PROPOSER'S CERTIFICATION FORM
(SECTION 00460)

I have carefully examined the Request for Proposal, Instructions to Proposers, General and/or Special Conditions, Vendor's Notes, Specifications, proposed agreement and any other documents accompanying or made a part of this Request for Proposal.

I hereby propose to furnish the goods or services specified in the Request for Proposal at the prices and rates quoted in my Proposal. I agree that my Proposal will remain firm for a period of up to one hundred twenty (120) days in order to allow the City adequate time to evaluate the Proposal.

I agree to abide by all conditions of the Proposal and understand that a background investigation may be conducted by the City of Deltona prior to award.

I certify that all information contained in this Proposal is truthful to the best of my knowledge and belief. I further certify that I am a duly authorized to submit this Proposal on behalf of the vendor / contractor as its act and deed and that the vendor / contractor is ready, willing and able to perform if awarded the contract.

I further certify, under oath, that this Proposal is made without prior understanding, agreement, connection, discussion, or collusion with any other person, firm or corporation submitting a Proposal for the same product or service; no officer, employee or agent of the City of Deltona Government or of any other Proposer interested in said Proposal; and that the undersigned executed this Proposer's Certification with full knowledge and understanding of the matters therein contained and was duly authorized to do so.

Name of Business

By: Mark A Scott
Signature

Mark A. Scott, President
Name & Title, Typed or Printed

P.O. Box 9667
Mailing Address

Daytona Beach, Fl. 32120
City, State, Zip Code

(386) 238-1234
Telephone Number

Sworn to and subscribed before me

This 12th day of

March, 2013

Heather S. Gardner
Signature of Notary

Notary Public, State of Florida

Personally known
-OR-
Produced Identification N/A

HEATHER S. GARDNER
Notary Public, State of Florida
My Comm. Expires Feb. 12, 2014
Commission No. DD 950895

SWORN STATEMENT UNDER SECTION 287.133(3)(A), FLORIDA STATUTES, ON PUBLIC ENTITY CRIMES (SECTION 00470)

THIS FORM MUST BE SIGNED IN THE PRESENCE OF A NOTARY PUBLIC OR OTHER OFFICER AUTHORIZED TO ADMINISTER OATHS.

This sworn statement is submitted to the City of Deltona by Mark A. Scott, President
(Individual's name and title)

For R.A. Scott Construction Company
(Name of entity submitting sworn statement)

Whose business address is P.O. Box 9667
Daytona Beach, Fl. 32120

And (if applicable) its Federal Employer Identification Number (FEIN) is 59-2342071
(if the entity has no FEIN, include the Social Security Number of the individual signing this sworn statement)

1. I understand that a "public entity crime" as defined in Section 287.133(1)(g), Florida Statutes, means a violation of any State or Federal law by a person with respect to and directly related to the transaction of business with any public entity or with an agency or political subdivision of any other state or with the United States, including, but not limited to, any bid or contract for goods or services to be provided to any public entity or an agency or political subdivision of any other state or a of the United States and involving antitrust, fraud, theft, bribery, collusion, racketeering, conspiracy, or material misrepresentation.

11. I understand that "convicted" or "conviction" as defined in Paragraph 287.133(1)(b), Florida Statutes, means a finding of guilt or a conviction of a public entity crimes, with or without an adjudication of guilt, in any Federal or State trial court of record relating to charges brought by indictment or information after July 1, 1989, as a result of a jury verdict, non-jury trial, or entry of a plea of guilty or nolo contendere.

12. I understand that an "affiliate' as defined in Section 287.133(1)(a), Florida Statutes, means:

    A predecessor or successor of a person convicted of a public entity crime: or an entity under the control of any natural person who is active in the management of the entity and how has been convicted of a public entity crime. The term "affiliate" includes those officers, directors, executives, partners, shareholders, employees, members, and agents who are active in the management of an affiliate. The ownership by one (1) person of shares constituting a controlling interest in another person, or a pooling of equipment or income among persons when not for fair market value under an arm's length agreement, shall be a prima facie case that one person controls another person. A person who knowingly enters into a joint venture with a person who has been convicted of a public entity crime in Florida during the preceding thirty-six (36) months shall be considered an affiliate.

13. I understand that a "person" as defined in Section 287.133(1)(e), Florida Statutes, means any natural person or entity organized under the laws of any state or of the United States with the legal power to enter into a binding contract and which bids or applies to bid on contracts for the provision of goods or services let by a public entity, or which otherwise transacts or applies to transact business with a public entity. The term "person" includes those officers, directors, executives, partners, shareholders employees, members, and agents who are active in management of an entity.

14. Based on information and belief, the statement which I have marked below is true in relation to the entity submitting this sworn statement. (You must indicate which statement applies.)

(SECTION 00470 Continued)

_____ Neither the entity submitting this sworn statement, nor any officers, directors, executives, partners, shareholders, employees, members, or agent who is active in management of the entity, nor the affiliate of the entity has been charged with and convicted of a public entity crime subsequent to July 1, 1989.

_____ The entity submitting this sworn statement, or one or more of the officers, directors, executives, partners, shareholders, employees, members or agent who are active in management of the entity, or an affiliate of the entity, has been charged with and convicted of a public entity crime subsequent to July 1, 1989.

_____ The entity submitting this sworn statement, or one or more of the officers, directors, executives, partners, shareholders, employees, members or agents who are active in management of the entity, or an affiliate of the entity, has been charged with and convicted of a public entity crime subsequent to July 1, 1989. However, there has been a subsequent proceeding before an Administrative Law Jury of the State of Florida, Division of Administrative Hearings and the Final Order entered by the Administrative Law Jury determined that it was not in the public interest to place the entity submitting this sworn statement on the convicted vendor list. (You must attach a copy of the final order).

I UNDERSTAND THAT THE SUBMISSION OF THIS FORM TO THE CITY OF DELTONA IS FOR THE CITY ONLY AND, THAT THIS FORM IS VALID THROUGH DECEMBER 31, OF THE CALENDAR YEAR IN WHICH IT IS FILED. I ALSO UNDERSTAND THAT I AM REQUIRED TO INFORM THE CITY PRIOR TO ENTERING IN TO A CONTRACT IN EXCESS OF THE THRESHOLD AMOUNT PROVIDED IN SECTION 287.017, FLORIDA STATUTES, FOR CATEGORY TWO OF ANY CHANGE IN THE INFORMATION CONTAINED IN THIS FORM.

Mark A Scott
SIGNATURE

March 12, 2013
DATE

State of Florida
County of Volusia

Personally appeared before me, the undersigned authority, Mark A. Scott (name of individual signing) who, after first being sworn by me, affixed his/~~her~~ signature in the space provided above on the 12 day of March, 2013.

Heather S. Gardner
NOTARY PUBLIC

My commission expires:

HEATHER S. GARDNER
Notary Public, State of Florida
My Comm. Expires Feb. 12, 2014
Commission No. DD 950895

NON COLLUSION AFFIDAVIT FORM
(SECTION 00480)

STATE OF FLORIDA

COUNTY OF VOLUSIA

Mark A. Scott, being first duly sworn deposes and says that:

i. He/~~She~~ is the President, of R.A. Scott Const. Co., the Bidder that has submitted the attached Bid;

ii. He/She is fully informed respecting the preparation and contents of the attached Bid and of all pertinent circumstances respecting such Bid;

iii. Such Bid is genuine and is not a collusive or sham Bid;

iv. Neither the said Bidder nor any of its officers, partners, owners, agents, representatives, employees, or parties in interest, including this affidavit, have in any way, colluded, conspired, connived or agreed, directly or indirectly, with any other Bidder, firm or person to submit a collusive or sham Bid in connection with the Contract for which the attached Bid has been submitted; or to refrain from bidding in connection with such Contract; or have in any manner, directly or indirectly, sought by agreement or collusion,, or communication, or conference with any Bidder, firm, or person to fix the price or prices in the attached Bid or of any other Bidder, or to fix any overhead, profit, or cost elements of the Bid price or the Bid price of any other Bidder, or to secure through any collusion, conspiracy, connivance, or unlawful agreement any advantage against (Recipient), or any person interested in the proposed Contract;

v. The price or prices quoted in the attached Bid are fair and proper and are not tainted by any collusion, conspiracy, connivance, or unlawful agreement on the part of the Bidder or any other of its agents, representatives, owners, employees or parties in interest, including this affidavit.

By Mark A Scott

Sworn and subscribed to before me this 12th day of March, 2013, in the State of Florida, County of Volusia.

Heather S. Gardner Notary Public

My Commission expires

HEATHER S. GARDNER
Notary Public, State of Florida
My Comm. Expires Feb. 12, 2014
Commission No. DD 950895

TRENCH SAFETY AFFIDAVIT FORM
(SECTION 00490)

(FAILURE TO COMPLETE THIS FORM MAY RESULT IN THE BID BEING DECLARED NON-RESPONSIVE)

R.A. Scott Construction Company (NAME OF CONTRACTOR) hereby provides written assurance that compliance with applicable Trench Safety Standards identified in the Occupational Safety & Health Administration's Excavation Safety Standards (OSHA) 29 C.F.R.S. 1926.650 Subpart P will be adhered to during trench excavation in accordance with Florida Statutes 553.60 through 533.64 inclusive (1990) "Trench Safety Act".

The specific methods of compliance with applicable Trench Safety Standards, and the associated cost of compliance (costs included in the Bid Price), are as follows (attach additional sheets if necessary):

Item and Safety Measure	Cost
Sloping	$1,195.00
	$
	$
	$
	$
	$
	$
TOTAL	$ 1,195.00

By the signature of its undersigned authorized representatives, the Bidder hereby assures the CITY OF DELTONA that any such excavation performed by the Bidder will be performed in compliance with all applicable trench safety standards.

By Mark A Scott

Sworn and subscribed to before me this 12th day of March, 2013, in the State of Florida, County of Volusia.

Heather S. Gardner Notary Public

My Commission expires:

HEATHER S. GARDNER
Notary Public, State of Florida
My Comm. Expires Feb. 12, 2014
Commission No. DD 950895

ADDENDUM # 1

CITY OF DELTONA
BID # PW 13-06
March 8, 2013

TIPTON DRIVE IMPROVEMENTS

All contents of this addendum shall be incorporated into the solicitation documents and the ensuing contract with the awarded contractor.

This addendum is to answer questions and clarify issues that have been brought up during the solicitation process.

Questions and inquiries are being accepted up to seven days prior to the bid opening. The last day and time questions and RFI's for this bid will be accepted are Friday, March 8, 2013. Therefore, no further questions or RFI's will be accepted regarding this project.

Addendums may be issued up to 48 hours prior to the bid opening due time.

City of Deltona is not responsible for third party plan rooms or third party plan holders. All documents pertaining to this bid can be downloaded from www.demandstar.com

CLARIFICATIONS:

a. A bid bond is required for this solicitation.

b. The engineer's estimate for this project is $260,000.

c. Bids shall be mailed to or dropped off at 255 Enterprise Road, Deltona, Florida 32725. Bids shall not be accepted at City Hall.

d. A Payment and Performance Bond is required for this project from the awarded Contractor. Payment and Performance Bond is required to be registered with Volusia County prior to a Notice to Proceed being issued. Proof of registration with Volusia County is required.

e. Contract time is: Substantial completion is 120 days. 30 additional days to final completion. Total Project completion is 150 days. Contract time includes permitting and the entire scope of work to complete this project.

f. Liquidated damages will be in effect for this contract ($1,000 per day).

g. The Work shall be performed by a General Contractor Licensed in the State of Florida. Contract shall not be awarded unless proof of valid license(s) is provided.

h. The City of Deltona is seeking Contractors who have proven past, positive experiences in projects of similar and same size of scope of work as the Prime Contractor. Contractors who cannot prove past, positive experiences in projects of similar and same size of scope of work as the Prime Contractor will not be considered for award.

i. References are required with bid submittals. References shall contain descriptions of work that are of similar and same size of scope of work. 8 references are required with submittals. References shall contain the Owners contact information for the projects referenced. References with a Contractor listed as the Owner shall not be accepted.

j. There are two places shown on the plans with potential water main conflicts. The plans mention "size and depths shown are unknown." Please note that at Tradewinds and Cavern Terrace, Sheet C-101, the water main is 4" AC and is 2.50 feet deep. At Sheffield and Elida, Sheet C-102, the water main is 8" AC and is 4.0 feet deep.

k. There is a potential water main conflict at the intersection of Tradewinds and Sheffield, near the inlet identified as SD-12. It is not labeled on the drawings but the Bid Form will establish the unit prices for water main conflicts and the Contractor will be paid for actual installed quantities.

l. If water main deflection is required on an AC water main the existing pipe shall be restrained via a thrust collar installed in accordance with the City of Deltona Standard Details.

m. All pipe material related to this project is proposed as RCP. ADS N12 is a product approved by the City of Deltona as an alternative for pipe material identified as RCP. HDPE is acceptable for material placed in areas that are not under the road.

n. Restoration activities shall restore the swale in accordance with the detail provided in the documents.

o. Any details not shown within the plans or drawings shall follow the City of Deltona standards manual.

p. Should the awarded Contractor encounter sprinkler systems, planted vegetation or older utility lines within the right-of-way. The City of Deltona requires the awarded Contractor to be customer friendly in letting the citizen know ahead of time (1 week minimum) that if there is a sprinkler system or planted vegetation within the right-of-way they have the option to remove the items. Should the citizen not remove the items, the Contractor shall be required to cap any irrigation system and return the sprinkler heads to the citizen.

QUESTIONS:

Question # 1 – Is this a unit price bid or lump sum?

Answer # 1 – There are unit price items and lump sum items. Award of bid will be made to the lowest, responsive and responsible bidder who meets the criteria of this solicitation.

Question # 2 –What permits are involved with this project?

Answer # 1 – The St. Johns WMD permit has been obtained. The project appears to be too small for a Stormwater Pollution Prevention Permit (SWPP). Should the awarded Contractor need to clear some extra areas for storage, it shall be the awarded Contractors responsibility to obtain the SWPP permit. The City of Deltona does not issue right-of -way use permits for its own projects.

Question # 3 – What is the amount for the testing allowance??

Answer # 3 – The testing allowance is listed as $3,000.00.

The bid due date remains Wednesday, March 13, 2013 at 2:00 p.m. All prospective bidders are hereby instructed not to contact the Engineer of Record or any member of the City of Deltona Commission, City Manager, or City of Deltona Staff members other than the noted contact person regarding this Invitation to Bid or their bid proposal at any time during the solicitation or award process. Any such contact shall be cause for rejection of your bid proposal.

All inquiries are to be directed to the Purchasing Agent for the Public Works Division at the City of Deltona. Contact for this solicitation is: Brian Boehs, Purchasing Agent. Email address is bboehs@deltonafl.gov. Phone is 386-878-8955.

ALL OTHER SPECIFICATIONS AND CONDITIONS REMAIN UNCHANGED.

RECEIPT OF THIS ADDENDUM IS HEREBY ACKNOWLEDGED

R.A. Scott Construction Company
NAME OF BUSINESS

BY: Mark A. Scott 3/12/13
SIGNATURE/DATE

Mark A. Scott, President
NAME & TITLE, TYPED OR PRINTED

P.O. Box 9667
MAILING ADDRESS

Daytona Beach, Fl. 32120
CITY, STATE, ZIP CODE

BIDDER'S CONTACT AND INFORMATION FORM
(SECTION 00110)

Bidder (Company) Name: SUN ROAD INC.	F. E. I. N. or SS Number: 200216176
Mailing Address: 451 AULIN AV STE B	Street Address: SAME
City, State, Zip: OVIEDO FL 32765	City, State, Zip: SAME
Type of Entity: *(Circle one)* Corporation Partnership Proprietorship Joint Venture	*I hereby certify that this bid is made without prior understanding, agreement, or connection with any corporation, firm, or person submitting a bid for the same materials, supplies or equipment, and is in all respects fair and without collusion or fraud. I agree to abide by all conditions of this bid and certify that I am authorized to sign this bid for the Bidder.* X Alfredo Bacci Authorized Signature (Manual)
Incorporated in the State of: FLORIDA Year: 2003	Typed or Printed Name: ALFREDO BACCI
Telephone Number: (407) 359 9367	Title: PRESIDENT
Fax Number: (407) 359 9368	
Email contact info: SUNROAD GC @ GMAIL.COM	

SECTION 00300

BID RESPONSE FORM

Proposal of SUN ROAD INC., hereinafter called "Bidder", a FLORIDA CORPORATION doing business as SUN ROAD INC. to the City of Deltona, Florida hereafter called "Owner". The Bidder, in compliance with the Owner's invitation for bids for the construction of:

City of Deltona

ITB #PW-13-06

TIPTON DRIVE IMPROVEMENTS

having examined the plans and specifications with related documents and the site of the proposed work, and being familiar with all of the conditions surrounding the construction of the proposed project including the availability of materials and labor, hereby proposes to furnish all labor, materials, and supplies; and to construct the project in accordance with the Contract Documents, within the time set forth herein, and at the prices stated below. These prices are to cover all expenses incurred in performing the work required under the Contract Documents, of which this proposal is a part.

Bidder accepts all of the terms and conditions of the Advertisement for Bids and General Conditions, Instructions, and Information for Bidders.

Bidder hereby agrees to commence work under contract on or before a date to be specified in a written "Notice to Proceed" of the Owner and to substantially complete the Project within 120 consecutive calendar days and to fully complete the Project within 150 consecutive calendar days thereafter as stipulated in the specifications. Bidder further agrees to pay any liquidated damages, as specified in the Agreement, for each consecutive calendar day thereafter.

Bidder has examined and carefully studied the Bidding Documents and the following addendum receipt of which is hereby acknowledged:

No. 1	Dated: MARCH 8 2013	No.	Dated:
No.	Dated:	No.	Dated:
No.	Dated:	No.	Dated:
No.	Dated:	No.	Dated:

BASE PROPOSAL: Bidder agrees to perform all of the work described in the specifications and shown on the plans for the sum shown in the schedule below:

Item No.	Description	Qty	Unit	Unit Price	Total Price
General Administrative					
1	Mobilization/Demobilization	1	LS	$2,500.00	$2,500.00
2	General Requirements, Bonds, Permits, etc.	1	LS	$10,000.00	$10,000.00
3	Indemnification	1	LS	$ 500.00	$ 500.00
4	Testing Allowance (Roadway and Pipe Compaction)	1	LS	$3,000.00	$ 3,000.00
Stormwater Sitework					
5	Layout and As-Built Survey	1	LS	$ 4,000.00	$4,000.00
6	Temporary Erosion Protection	1	LS	$ 3,500.00	$ 3,500.00
7	Maintenance of Traffic	1	LS	$12,500.00	$12,500.00
8	Clearing and Grubbing	1	LS	$6,000.00	$ 6,000.00
9	Site Grading	1	LS	$14,000.00	$14,000.00
10	Remove and Dispose Existing Drainage Inlets	4	EA	$ 550.00	$ 2,200.00
11	Remove and Dispose Existing Drainage Culverts	225	LF	$ 12.00	$ 2700.00
12	Remove and Replace Driveway	90	SY	$50.00	$ 4,500.00
13	Remove and Replace Pavement	550	SY	$ 38.00	$20,900.00
14	Furnish and Install 14" x 23" Elliptical RCP	55	LF	$ 40.00	$ 3,200.00
15	Furnish and Install 18" Reinforced Concrete Pipe	55	LF	$ 22.00	$ 1,210.00
16	Furnish and Install 36" Reinforced Concrete Pipe (<10-ft depth)	775	LF	$ 84.00	$65,100.00
17	Furnish and Install 36" Reinforced Concrete Pipe (>10-ft depth)	275	LF	$ 90.00	$ 24,750.00
18	Type "C" Inlet	3	EA	$1275.00	$ 3875.00
19	Type "D" Inlet - 6-ft Alternate B	2	EA	$3825.00	$ 7650.00
20	Type "J" Manhole - 6-ft Alternate A (<10-ft depth)	2	EA	$ 3,150.00	$ 6,300.00
21	Type "J" Manhole - 6-ft Alternate A (>10-ft depth)	2	EA	$ 4600.00	$ 9,200.00
22	Modified Type "H" Outfall Structure	1	EA	$2552.00	$ 2,552.00
23	Furnish and Install 36" Headwall	1	EA	$ 2,850.00	$ 2,850.00
24	Furnish and Install Rip Rap	110	SY	$ 50.00	$ 5,500.00
Water Main Conflict					
25	45° Bend (FLG.)	4	EA	$ 425.00	$ 1,700.00
26	Furnish and Install PVC C900 Pipe (restrained joint)	35	LF	$ 102.00	$ 3,570.00
27	Remove and Replace Pavement Related to Water Main Conflict	40	SY	$ 56.00	$ 2,240.00
				TOTAL BASE BID	$ 224,997.00

TOTAL BASE BID IN WORDS:

TWO HUNDRED TWENTY FOUR THOUSAND NINE HUNDRED NINETY SEVEN **DOLLARS AND** 00 **/100 CENTS**

The unit prices provided above shall include all labor, materials, bailing, shoring, removal, overhead, profit, insurance, etc., to cover the finished work of the several kinds required. Any changes to the Work after issuance of the Notice of Award shall be processed in accordance with Articles 10, 11, and 12 of the General Conditions (Section 00700) and Article 5 of the Agreement with the Owner.

Bidder understands that the Owner reserves the right to reject any or all bids and to waive any informalities in the bidding.

A bid security, attached in the sum of five (5) percent of the Total Bid Amount, is to become the property of the Owner in the event contract and bond are not executed within thirty (30) days of the Owner issuing a Notice of Award, as liquidated damages for the delay and additional expense to the Owner caused thereby.

Respectfully submitted:

By: SUN ROAD INC.
(Business Name)

(SEAL - if bid is by corporation)

451 AULIN AV. STE B
(Business Address)

OVIEDO FL 32765
(Business City, State, Zip Code)

(Signature)

ALFREDO BACCI
(Printed Name)

PRESIDENT
(Title)

SCHEDULE OF BASE BID MANUFACTURERS/SUPPLIERS
(SECTION 300A)

The Contract Documents are based upon the equipment or products available from the manufacturers/suppliers denoted as "A", "B", etc. However, the Bidder must indicate in his Bid which Base Bid manufacturer/supplier he intends to use for each item of equipment listed by circling one (1) of the listed manufacturers/suppliers. Should the Bidder fail to circle a named supplier, he hereby agrees to provide the item listed as "A". After receipt of bids, the Bidder may not substitute for any manufacturer or supplier circled. Listed manufacturers/suppliers identified as deductive alternates will be considered as a deductive alternate as presented in the Deductive Alternate Section of the Bid Form.

If the Bidder desires to propose one (1) or more substitution or "or equal" manufacturers/suppliers, he may write in the name of such substitution or "or equal" in the spaces provided on the pages following the lists, but he must, nevertheless, also circle one of the listed manufacturers/suppliers. All substitutions or "or equal" items must be identified at the time of Bid (see paragraph 6.7 of the General Conditions as amended by the Supplementary Conditions). Substitutions or "or equal" items will **not** be considered when determining the Apparent Lowest Bidder. Substitutions or "or equal" items will **not** be evaluated or considered until after the "Effective Date" of the Agreement. The Bidder shall base his Bid on providing one of the listed manufacturers/suppliers and shall assume for bidding purposes that all substitutions or "or equal" items will not be accepted.

If the proposed substitution or "or equal" manufacturer/supplier is determined "not equivalent" by the Engineer, the Bidder must use the circled manufacturer/supplier. If the Bidder fails to indicate which listed manufacturer/supplier he intends to use or if a substitution or an "or equal" is rejected, he must use the manufacturer/supplier listed as "A". Also, if the Bidder circles more than one listed manufacturer/supplier, he must use the first manufacturer/supplier circled (unless a substitution or "or equal" is approved).

Each proposed substitution or "or equal" will be evaluated in accordance with Paragraph 6.7 of the General Conditions as amended by the Supplementary Conditions following the Effective Date of the Agreement.

In addition to the reimbursement required under Paragraph 6.7 of the General Conditions, the Contractor shall also reimburse the Owner for any engineering costs directly attributable to the change in manufacturers/suppliers, caused by the acceptance of proposed substitution or "or equal" items, such as; additional field trips for the Engineer, additional redesign costs, and additional review costs, etc. Other costs directly attributable to the change in manufacturers/suppliers caused by the acceptance of proposed substitution or "or equal" items such as increased electrical requirements, larger building, modifications to structures, additional pumps, piping or tankage, etc., shall be borne by others and not by the Owner. Bidder further agrees that the use of substitute equipment offered will not affect the completion date.

The Owner may request, and the Bidder shall supply, complete information on proposed substitution or "or equal" items prior to the Notice of Award.

Category I - **SCHEDULE OF BASE BID MANUFACTURERS / SUPPLIERS (SECTION 300A)**

Item No.	Equipment Item or Material	Specification Section No.	Manufacturer/Supplier
1.	STRUCTURES, RCP.		HANSON PIPE & PRECAST
2.	PVC, BELL RESTRAINT		FERGUSON
3.	WATER FITTINGS		
4.			
5.			
6.			
7.			

SUBSTITUTION LIST OF MANUFACTURERS / SUPPLIERS
(SECTION 00300B)

Bidder proposes the following substitutions and "or equal" items of alternate manufacturers/suppliers for the equipment of material categories so identified:

	Equipment Item Material	Drawing No.	Spec. Section	Substitute/"or equal" Manufacturer/Supplier (List One Only)	Proposed Price Deduct
1.					
2.					
3.					
4.					
5.					
6.					
7.					
9.					
10.					

SUBSTITUTIONS AND "OR EQUAL"

The above signed as Bidder agrees that substitutions or "or equal" items will not be considered until after the "Effective Date of the Agreement" and will be evaluated in accordance with Paragraphs 6.7, 6.7.1 and 6.7.2, of the General Conditions as amended by the Supplementary Conditions. If Bidder intends to propose substitutions or "or equal" items after the "Effective Date of the Agreement", it is agreed that these items will be listed on the Substitution List included with the Bid (form provided herein). Only the proposed substitutions or "or equal" items listed on the Substitution List will be evaluated by the Engineer in accordance with the General Conditions.

QUESTIONNAIRE FORM
(SECTION 00301)

DATE: MARCH 12, 2013

PROJECT IDENTIFICATION **City of Deltona – Public Works Division**
TIPTON DRIVE IMPROVEMENTS

NAME OF BIDDER: SUN ROAD INC.

BUSINESS ADDRESS: 451 AULIN AV STE B. OVIEDO FL 32765

TELEPHONE NO: 407 359 9367

CONTRACTOR'S FLORIDA LICENSE NO: CGC 062726

The signed bidder warrants the truth and accuracy of all statements and answers herein contained. Include additional sheets if necessary.

1. How many years has your organization been in business as a General Contractor? 10 YEARS

2. Have you ever failed to complete work awarded to you? If so, where and why?
   NO

3. Name three (3) municipalities or government entities for which you have performed similar projects as this one and to which you refer?
   ORANGE COUNTY
   CITY OF MOUNT DORA
   ORANGE COUNTY CITY OF MELBOURNE

4. Have you personally inspected the site of the proposed Work? Describe any anticipate problems with the site and your proposed solutions.
   YES

5. Will you Subcontract any part of this Work? If so, describe which portion(s).
   ASPHALT PAVING

6. What equipment do you own that is available for the Work? (attach additional sheets if necessary)

JD 330 544 LOADER. SKID STEER.
ALL MAJOR EQUIPMENT NEEDED

7. What equipment will you purchase for the Work?

8. What equipment will you rent for the Work?

9. The following is given as a summary of the Financial Statement of the undersigned: (List Assets and Liabilities and use insert sheet if necessary.)

ASSETS 270,756
LIABILITIES 100,216
EQUITY 170,539

10. State the true and exact, correct, and complete name under which you do business.

Bidder is: SUN ROAD INC.

SUB-CONTRACTORS AND AFFILIATES FORM
(SECTION 00301A)

The following are a list of Sub Contractors or Affiliates that will be utilized in this project. Use additional sheets if necessary.

1. **Firm Name:** RJ DANNERHOFFER & SON PAVING INC
   Trade: PAVING
   Firm Owner: JOAN DANNERHOFFER
   Firm Address: 510 NORTH NOEL CT CHULUOTA FL 32766
   Firm Phone Number: 321 689 3629 / 407 359 1900

2. **Firm Name:** _____
   Trade: _____
   Firm Owner: _____
   Firm Address: _____
   Firm Phone Number: _____

3. **Firm Name:** _____
   Trade: _____
   Firm Owner: _____
   Firm Address: _____
   Firm Phone Number: _____

4. **Firm Name:** _____
   Trade: _____
   Firm Owner: _____
   Firm Address: _____
   Firm Phone Number: _____

5. **Firm Name:** _____
   Trade: _____
   Firm Owner: _____
   Firm Address: _____
   Firm Phone Number: _____

REFERENCES FORM
(SECTION 00301B)

The City of Deltona is seeking Contractors who have proven past, positive experiences in projects of similar and same size of scope of work. These references are required with your submittals. References shall contain the Owners contact information for the projects referenced. References with another Contractor listed as the Owner shall not be accepted. Contractors not having past, positive experiences in projects of similar and same size of scope of work, as the Prime Contractor, will not be considered. References which are located in foreign countries are not acceptable.

1. **Project Name:** WILLISTON CROSSING RV RESORT WATER & SEWER.
   Project Value: $ 450000 (LABOR & EQUIPMENT)
   Project Description: NEW SEWER & WATER FOR 300 SITES PHASE II
   Project Owner: SOUTHERN LEISURE RESORTS
   Owner contact information: GARY BLACKWEL 3525287100
   Project Location: WILLISTON FL.
   Project Start and End Dates: MARCH 2012 / JAN 2013

2. **Project Name:** LAKE MINNIE PLAZA
   Project Value: $ 400.000
   Project Description: SITE & UTILITIES
   Project Owner: A & R PROJECTS
   Owner contact information: MARTHA AYALA
   Project Location: SANFORD FL
   Project Start and End Dates: NOV 2007 / FEB 2008

3. **Project Name:** GREAT OAKS VILLAGE SEWER IMPROVEMENTS
   Project Value: $ 146.000
   Project Description: SEWER SYSTEM RETROFIT
   Project Owner: ORANGE COUNTY
   Owner contact information: LARRY WOOLRIDGE 4079479705
   Project Location: MICHIGAN AV. ORLANDO FL.
   Project Start and End Dates: SEP 2012 / FEB 2013

4. **Project Name:** WEKIVA RV CAMP SEWER.
   Project Value: $ 147.000
   Project Description: NEW SEWER SYSTEM WEKIVA PARK RV CAMP
   Project Owner: STATE OF FLORIDA / ORANGE COUNTY
   Owner contact information: BRUCE BLAIR 4079479903
   Project Location: WEKIVA CIRCLE APOPKA
   Project Start and End Dates: NOV 2012 FEB 2013

REFERENCES FORM
(SECTION 00301B CONTINUED)

5. **Project Name:** FIRE HYDRANT REPLACEMENT
Project Value: $85,000
Project Description: REPLACE FIRE HYDRANTS
Project Owner: CITY OF MOUNT DORA
Owner contact information: JOHN BRUCE 352 735 7176.
Project Location: MOUNT DORA FL.
Project Start and End Dates: AUG 2012 / OCT 2012.

6. **Project Name:** LAKE GATLIN ~~STORM~~ IMPROVEMENT
Project Value: $ 85,000
Project Description: JACK & BORE & SI
Project Owner: ORANGE COUNTY
Owner contact information: ORANGE COUNTY UTILITIES
Project Location: LAKE GATLIN ROAD
Project Start and End Dates: FEB 2004 / APRIL 2004

7. **Project Name:** GRANADA WOOD BAFFLE BOX
Project Value: $137,000
Project Description: INSTALL BAFFLE BOXES & STORM.
Project Owner: ORANGE COUNTY
Owner contact information: ORANGE COUNTY UTILITIES
Project Location: GRANADA WOODS SUBDIVISION
Project Start and End Dates: FEB 2003 / MAY 2003

8. **Project Name:** _____
Project Value: _____
Project Description: _____
Project Owner: _____
Owner contact information: _____
Project Location: _____
Project Start and End Dates: _____

Executed in 1 Counterpart

BID BOND FORM
(SECTION 00410)

KNOWN ALL MEN BY THESE PRESENTS, that we, the undersigned, Sun Road, Inc. as Principal, and The Ohio Casualty Insurance Company as Surety, are hereby held and firmly bound unto the City of Deltona, Florida as Owner in the penal sum of, (five percent 5%) of the Contract Bid PW 13-06 for the payment of which, well and truly to be made, we hereby and severally bind ourselves, successors and assigns to pay Owner upon default of Bidder the penal sum set forth on the face of this Bond. Signed, this 13th day of March, 2013.

The condition of the above obligation is such that whereas the Principal has submitted to the City of Deltona, Florida a certain bid, attached hereto and hereby made a part hereof, to enter into a contract in writing, for the **TIPTON DRIVE IMPROVEMENTS.**

NOW THEREFORE,

1. Default of Bidder shall occur upon the failure of Bidder to deliver within the time required by the Bidding Documents the executed Agreement required by the Bidding Documents and any performance and payment bonds required by the Bidding Documents and Contract Documents.

2. This obligation shall be null and void if:

   2.1 Owner accepts Bidder's bid and Bidder delivers within the time required by the Bidding Documents (or an extension thereof agreed to in writing by Owner) the executed Agreement required by the Bidding Documents and any performance and payment bonds required by the Bidding Documents and Contract Documents, or

   2.2 All bids are rejected by Owner, or

   2.3 Owner fails to issue a notice of award to Bidder within the time specified in the Bidding Documents (or any extension thereof agreed to in writing by Bidder and, if applicable, consented to by Surety when required by paragraph 5 hereof).

3. Payment under this Bond will be due and Payable upon default of Bidder and within thirty (30) calendar days after receipt of Bidder and surety of written notice of default from Owner which notice will be given with reasonable promptness, identifying this Bond and the Project and including a statement of the amount due.

4. Surety waives notice of any and all defenses based on or arising out of any time extension to issue notice of award agreed to in writing by Owner and Bidder, providing that the time for issuing notice of award including extensions shall not in the aggregate exceed one hundred twenty (120) days from Bid Due without Surety's written consent.

5. No suite or action shall be commenced under this Bond prior to thirty (30) calendar days after the notice of default required in paragraph 3 above is received by Bidder and Surety, and in no case later than one year after Bid Due Date.

6. Any suite or action under this Bond shall be commenced only in a court of competent jurisdiction located in the state in which the Project is located.

7. Notice required hereunder shall be in writing and sent to Bidder and Surety at their respective addresses shown on the face of this Bond. Such notices may be sent by personal delivery, commercial courier or by United States Registered or Certified Mail, return receipt requested, postage pre-paid, and shall be deemed to be effective upon receipt by the part concerned.

8. Surety shall cause to be attached to this Bond a current and effective Power of Attorney evidencing the authority of the officer, agent or representative who executed this Bond on behalf of Surety to execute, seal and deliver such Bond and bind the Surety thereby.

9. This bond is intended to conform to all applicable statutory requirements. Any applicable requirement of any applicable statute that has been omitted from this Bond shall be deemed to be included herein as if set forth at length. If any provision of the Bond conflicts with any applicable provision of any applicable statute, then the provision of said statute shall govern and the remainder of the Bond that is not in conflict therewith shall continue in full force and effect.

10. The term "bid' as used herein includes a bid, offer or proposal as applicable.

IN WITNESS WHEREOF, the Principal and the Surety have hereunto set their hands and seals, and such of them as are corporations have caused their corporate seals to be hereto affixed and these presents to be signed by their proper officers, the day and year first set forth above.

Principal (Print Full Name):

Sun Road, Inc.

By: Alfredo Bacci (LS)

Title: PRESIDENT

Attest: ALFREDO BACCI
Signature and Title

Surety (Print Full Name):

The Ohio Casualty Insurance Company (Seal)
Surety's Name and Corporate Seal

By: Patricia L. Slaughter
Signature (attach power of attorney)
Patricia L. Slaughter

Title: Attorney-In-Fact & FL Licensed Resident Agent

Attest: Donna Keefer
Donna Keefer Signature and Title , Witness

March 13, 2013
(DATE)

IMPORTANT – Surety companies executing bonds must appear on the Treasury Department's most current list (Circular 570 as amended) and be authorized to transact business in the State of Florida.

THIS POWER OF ATTORNEY IS NOT VALID UNLESS IT IS PRINTED ON RED BACKGROUND.
This Power of Attorney limits the acts of those named herein, and they have no authority to bind the Company except in the manner and to the extent herein stated.

Certificate No. 5869437

American Fire and Casualty Company
The Ohio Casualty Insurance Company
Liberty Mutual Insurance Company
West American Insurance Company

POWER OF ATTORNEY

KNOWN ALL PERSONS BY THESE PRESENTS: That American Fire & Casualty Company and The Ohio Casualty Insurance Company are corporations duly organized under the laws of the State of New Hampshire, that Liberty Mutual Insurance Company is a corporation duly organized under the laws of the State of Massachusetts, and West American Insurance Company is a corporation duly organized under the laws of the State of Indiana (herein collectively called the "Companies"), pursuant to and by authority herein set forth, does hereby name, constitute and appoint, Patricia L. Slaughter; Jeffrey W. Reich; Susan L. Reich; Kim E. Niv; Leslie M. Donahue; Gloria Anne Richards; Teresa L. Durham; Don Bramlage; Cheryl Foley; Lisa Roseland

all of the city of MAITLAND, state of FL each individually if there be more than one named, its true and lawful attorney-in-fact to make, execute, seal, acknowledge and deliver, for and on its behalf as surety and as its act and deed, any and all undertakings, bonds, recognizances and other surety obligations, in pursuance of these presents and shall be as binding upon the Companies as if they have been duly signed by the president and attested by the secretary of the Companies in their own proper persons.

IN WITNESS WHEREOF, this Power of Attorney has been subscribed by an authorized officer or official of the Companies and the corporate seals of the Companies have been affixed thereto this 1st day of December, 2012.

American Fire and Casualty Company
The Ohio Casualty Insurance Company
Liberty Mutual Insurance Company
West American Insurance Company

By: Gregory W. Davenport, Assistant Secretary

STATE OF WASHINGTON ss
COUNTY OF KING

On this 1st day of December, 2012, before me personally appeared Gregory W. Davenport, who acknowledged himself to be the Assistant Secretary of American Fire and Casualty Company, Liberty Mutual Insurance Company, The Ohio Casualty Company, and West American Insurance Company, and that he, as such, being authorized so to do, execute the foregoing instrument for the purposes therein contained by signing on behalf of the corporations by himself as a duly authorized officer.

IN WITNESS WHEREOF, I have hereunto subscribed my name and affixed my notarial seal at Seattle, Washington, on the day and year first above written.

By: KD Riley, Notary Public

This Power of Attorney is made and executed pursuant to and by authority of the following By-laws and Authorizations of American Fire and Casualty Company, The Ohio Casualty Insurance Company, Liberty Mutual Insurance Company, and West American Insurance Company which resolutions are now in full force and effect reading as follows:

ARTICLE IV – OFFICERS – Section 12. Power of Attorney. Any officer or other official of the Corporation authorized for that purpose in writing by the Chairman or the President, and subject to such limitation as the Chairman or the President may prescribe, shall appoint such attorneys-in-fact, as may be necessary to act in behalf of the Corporation to make, execute, seal, acknowledge and deliver as surety any and all undertakings, bonds, recognizances and other surety obligations. Such attorneys-in-fact, subject to the limitations set forth in their respective powers of attorney, shall have full power to bind the Corporation by their signature and execution of any such instruments and to attach thereto the seal of the Corporation. When so executed, such instruments shall be as binding as if signed by the President and attested to by the Secretary. Any power or authority granted to any representative or attorney-in-fact under the provisions of this article may be revoked at any time by the Board, the Chairman, the President or by the officer or officers granting such power or authority.

ARTICLE XIII – Execution of Contracts – SECTION 5. Surety Bonds and Undertakings. Any officer of the Company authorized for that purpose in writing by the chairman or the president, and subject to such limitations as the chairman or the president may prescribe, shall appoint such attorneys-in-fact, as may be necessary to act in behalf of the Company to make, execute, seal, acknowledge and deliver as surety any and all undertakings, bonds, recognizances and other surety obligations. Such attorneys-in-fact subject to the limitations set forth in their respective powers of attorney, shall have full power to bind the Company by their signature and execution of any such instruments and to attach thereto the seal of the Company. When so executed such instruments shall be as binding as if signed by the president and attested by the secretary.

Certificate of Designation – The President of the Company, acting pursuant to the Bylaws of the Company, authorizes Gregory W. Davenport, Assistant Secretary to appoint such attorneys-in-fact as may be necessary to act on behalf of the Company to make, execute, seal, acknowledge and deliver as surety any and all undertakings, bonds, recognizances and other surety obligations.

Authorization – By unanimous consent of the Company's Board of Directors, the Company consents that facsimile or mechanically reproduced signature of any assistant secretary of the Company, wherever appearing upon a certified copy of any power of attorney issued by the Company in connection with surety bonds, shall be valid and binding upon the Company with the same force and effect as though manually affixed.

I, David M. Carey, the undersigned, Assistant Secretary, of American Fire and Casualty Company, The Ohio Casualty Insurance Company, Liberty Mutual Insurance Company, and West American Insurance Company do hereby certify that the original power of attorney of which the foregoing is a full, true and correct copy of the Power of Attorney executed by said Companies, is in full force and effect and has not been revoked.

IN TESTIMONY WHEREOF, I have hereunto set my hand and affixed the seals of said Companies this 13th day of March, 2013.

By: David M. Carey, Assistant Secretary

Not valid for mortgage, note, loan, letter of credit, bank deposit, currency rate, interest rate or residual value guarantees.

To confirm the validity of this Power of Attorney call 1-610-832-8240 between 9:00 am and 4:30 pm EST on any business day.

LMS_12873_092012

CORPORATE RESOLUTION FORM
(SECTION 00420)

I, ALFREDO BACCI, Secretary of SUN ROAD INC, a corporation organized and existing under the laws of the State of FLORIDA, hereby certify that at a meeting of the Board of Directors of the Corporation duly called and held on AUGUST, 2009 at which a quorum was present and acting throughout, the following resolutions were adopted and are now in full force effect:

RESOLVED that the following individuals of this corporation are authorized to execute on behalf of this corporation A Bid and Agreement to _____ for the construction of _____ _____.

I further certify that the names of the officers of this corporation and any other persons authorized to act under this resolution and their official signatures are as follows:

NAME	OFFICE	OFFICIAL SIGNATURE
ALFREDO BACCI	PRESIDENT	Alfredo Bacci

IN WITNESS THEREOF, I have hereunto subscribed my name as Secretary and affixed the seal of the corporation this 13 day of MARCH, 2013

HOLD HARMLESS AND INDEMNITY AGREEMENT
(SECTION 00430)

SUN ROAD INC, agrees through the signing of this document by an authorized party or agent that it shall defend, indemnify and hold harmless the City of Deltona, and its agents, employees, and public officials from and against all suits, losses, claims, demands, judgments of every name and description arising out of or incidental to the performance of this contract or work performed thereunder, whether or not due to or caused by the negligence of the City of Deltona, its agents, employees, and public officials excluding only the sole negligence of the City of Deltona, its agents, employees, and Public Officials.

This provision shall also pertain to any claims brought against the City of Deltona, its agents, employees, and public officials by an employee of the named Contractor, any Sub-contractor, or anyone directly or indirectly employed by any of them.

The Contractor's obligation to indemnify the City of Deltona, its agents, employees and public officials under this provision shall be limited to $1,000,000 per occurrence which the parties agree bears a reasonable commercial relationship to the contract.

The Contractor agrees to accept, and acknowledges as adequate remunerations, the consideration of $10, which is part of the agreed bid price, the promises contained herein, and other good and valuable consideration, the receipt of which is hereby acknowledged, for agreement to enter into this Hold Harmless and Indemnity Agreement.

CONTRACTOR

MARCH 13, 2017
DATE

DRUG-FREE WORKPLACE FORM
(SECTION 00440)

The undersigned Bidder in accordance with Florida Statute 287.087, hereby certifies that SUNROAD INC does:
(*Name of Business*)

1. Publish a statement notifying employees that the unlawful manufacture, distribution, dispensing, possession, or use of a controlled substance is prohibited in the workplace and specifying the actions that will be taken against employees for violations of such prohibition.

2. Inform employees about the dangers of drug abuse in the workplace, the business's policy of maintaining a drug-free workplace, any available drug counseling, rehabilitation, and employee assistance programs, and the penalties that may be imposed upon employees for drug abuse violations.

3. Give each employee engaged in providing the commodities or contractual services that are proposed a copy of the statement specified in subsection (1).

4. In the statement specified in subsection (1), notify the employees that, as a condition of working on the commodities or contractual services that are under bid, the employee will abide by the terms of the statement and will notify the employer of any conviction of, or plea of guilty or nolo contendere to, any violation of Chapter 893 or of any controlled substance law of the United States or any state, for a violation occurring in the workplace no later than five (5) days after such conviction.

5. Impose a sanction on, or require the satisfactory participation in a drug abuse assistance or rehabilitation program if such is available in the employee's community, by any employee who is so convicted.

6. Make a good faith effort to continue to maintain a drug-free workplace through implementation of this section.

As the person authorized to sign the statement, I certify that this firm complies fully with the above requirements.

X _____
Bidder's Signature

MARCH 13, 2013
Date

PROPOSER'S CERTIFICATION FORM
(SECTION 00460)

I have carefully examined the Request for Proposal, Instructions to Proposers, General and/or Special Conditions, Vendor's Notes, Specifications, proposed agreement and any other documents accompanying or made a part of this Request for Proposal.

I hereby propose to furnish the goods or services specified in the Request for Proposal at the prices and rates quoted in my Proposal. I agree that my Proposal will remain firm for a period of up to one hundred twenty (120) days in order to allow the City adequate time to evaluate the Proposal.

I agree to abide by all conditions of the Proposal and understand that a background investigation may be conducted by the City of Deltona prior to award.

I certify that all information contained in this Proposal is truthful to the best of my knowledge and belief. I further certify that I am a duly authorized to submit this Proposal on behalf of the vendor / contractor as its act and deed and that the vendor / contractor is ready, willing and able to perform if awarded the contract.

I further certify, under oath, that this Proposal is made without prior understanding, agreement, connection, discussion, or collusion with any other person, firm or corporation submitting a Proposal for the same product or service; no officer, employee or agent of the City of Deltona Government or of any other Proposer interested in said Proposal; and that the undersigned executed this Proposer's Certification with full knowledge and understanding of the matters therein contained and was duly authorized to do so.

Name of Business

By: Alfred Bacci
Signature

ALFRED BACCI PRESIDENT
Name & Title, Typed or Printed

451 AVALON AVENUE
Mailing Address

OVIEDO FL 32765
City, State, Zip Code

(321) 303 3697
Telephone Number

Sworn to and subscribed before me

This 12th day of

March, 2013

Pamela C. Shannon
Signature of Notary

Notary Public, State of Florida

Personally known
-OR-
Produced Identification _____

PAMELA C SHANNON
MY COMMISSION # EE864045
EXPIRES January 10, 2017
(407) 398-0153 FloridaNotaryService.com

SWORN STATEMENT UNDER SECTION 287.133(3)(A), FLORIDA STATUTES, ON PUBLIC ENTITY CRIMES (SECTION 00470)

THIS FORM MUST BE SIGNED IN THE PRESENCE OF A NOTARY PUBLIC OR OTHER OFFICER AUTHORIZED TO ADMINISTER OATHS.

This sworn statement is submitted to the City of Deltona by ALBERTO BACCI
(Individual's name and title)

For SUN ROAD INC.
(Name of entity submitting sworn statement)

Whose business address is 451 AULIN AV STE B.
ONIEDC FL 32765

And (if applicable) its Federal Employer Identification Number (FEIN) is _____
(if the entity has no FEIN, include the Social Security Number of the individual signing this sworn statement)

1. I understand that a "public entity crime" as defined in Section 287.133(1)(g), Florida Statutes, means a violation of any State or Federal law by a person with respect to and directly related to the transaction of business with any public entity or with an agency or political subdivision of any other state or with the United States, including, but not limited to, any bid or contract for goods or services to be provided to any public entity or an agency or political subdivision of any other state or a of the United States and involving antitrust, fraud, theft, bribery, collusion, racketeering, conspiracy, or material misrepresentation.

11. I understand that "convicted" or "conviction" as defined in Paragraph 287.133(1)(b), Florida Statutes, means a finding of guilt or a conviction of a public entity crimes, with or without an adjudication of guilt, in any Federal or State trial court of record relating to charges brought by indictment or information after July 1, 1989, as a result of a jury verdict, non-jury trial, or entry of a plea of guilty or nolo contendere.

12. I understand that an "affiliate' as defined in Section 287.133(1)(a), Florida Statutes, means:

    A predecessor or successor of a person convicted of a public entity crime: or an entity under the control of any natural person who is active in the management of the entity and how has been convicted of a public entity crime. The term "affiliate" includes those officers, directors, executives, partners, shareholders, employees, members, and agents who are active in the management of an affiliate. The ownership by one (1) person of shares constituting a controlling interest in another person, or a pooling of equipment or income among persons when not for fair market value under an arm's length agreement, shall be a prima facie case that one person controls another person. A person who knowingly enters into a joint venture with a person who has been convicted of a public entity crime in Florida during the preceding thirty-six (36) months shall be considered an affiliate.

13. I understand that a "person" as defined in Section 287.133(1)(e), Florida Statutes, means any natural person or entity organized under the laws of any state or of the United States with the legal power to enter into a binding contract and which bids or applies to bid on contracts for the provision of goods or services let by a public entity, or which otherwise transacts or applies to transact business with a public entity. The term "person" includes those officers, directors, executives, partners, shareholders employees, members, and agents who are active in management of an entity.

14. Based on information and belief, the statement which I have marked below is true in relation to the entity submitting this sworn statement. (You must indicate which statement applies.)

(SECTION 00470 Continued)

X Neither the entity submitting this sworn statement, nor any officers, directors, executives, partners, shareholders, employees, members, or agent who is active in management of the entity, nor the affiliate of the entity has been charged with and convicted of a public entity crime subsequent to July 1, 1989.

_____ The entity submitting this sworn statement, or one or more of the officers, directors, executives, partners, shareholders, employees, members or agent who are active in management of the entity, or an affiliate of the entity, has been charged with and convicted of a public entity crime subsequent to July 1, 1989.

_____ The entity submitting this sworn statement, or one or more of the officers, directors, executives, partners, shareholders, employees, members or agents who are active in management of the entity, or an affiliate of the entity, has been charged with and convicted of a public entity crime subsequent to July 1, 1989. However, there has been a subsequent proceeding before an Administrative Law Jury of the State of Florida, Division of Administrative Hearings and the Final Order entered by the Administrative Law Jury determined that it was not in the public interest to place the entity submitting this sworn statement on the convicted vendor list. (You must attach a copy of the final order).

I UNDERSTAND THAT THE SUBMISSION OF THIS FORM TO THE CITY OF DELTONA IS FOR THE CITY ONLY AND, THAT THIS FORM IS VALID THROUGH DECEMBER 31, OF THE CALENDAR YEAR IN WHICH IT IS FILED. I ALSO UNDERSTAND THAT I AM REQUIRED TO INFORM THE CITY PRIOR TO ENTERING IN TO A CONTRACT IN EXCESS OF THE THRESHOLD AMOUNT PROVIDED IN SECTION 287.017, FLORIDA STATUTES, FOR CATEGORY TWO OF ANY CHANGE IN THE INFORMATION CONTAINED IN THIS FORM.

Alfredo Barci
SIGNATURE

MARCH 13, 2013.
DATE

State of Florida
County of Seminole

Personally appeared before me, the undersigned authority, Alfredo Barci (name of individual signing) who, after first being sworn by me, affixed his/her signature in the space provided above on the 13 day of March, 2013.

PAMELA C SHANNON
MY COMMISSION # EE864045
EXPIRES January 10, 2017
(407) 398-0153 FloridaNotaryService.com

NOTARY PUBLIC

Pamela C. Sh

My commission expires:

01-10-2017

NON COLLUSION AFFIDAVIT FORM
(SECTION 00480)

STATE OF FLORIDA

COUNTY OF VOLUSIA

ALFIER BACCI, being first duly sworn deposes and says that:

i. He/She is the PRESIDENT, of SUN ROAD INC, the Bidder that has submitted the attached Bid;

ii. He/She is fully informed respecting the preparation and contents of the attached Bid and of all pertinent circumstances respecting such Bid;

iii. Such Bid is genuine and is not a collusive or sham Bid;

iv. Neither the said Bidder nor any of its officers, partners, owners, agents, representatives, employees, or parties in interest, including this affidavit, have in any way, colluded, conspired, connived or agreed, directly or indirectly, with any other Bidder, firm or person to submit a collusive or sham Bid in connection with the Contract for which the attached Bid has been submitted; or to refrain from bidding in connection with such Contract; or have in any manner, directly or indirectly, sought by agreement or collusion,, or communication, or conference with any Bidder, firm, or person to fix the price or prices in the attached Bid or of any other Bidder, or to fix any overhead, profit, or cost elements of the Bid price or the Bid price of any other Bidder, or to secure through any collusion, conspiracy, connivance, or unlawful agreement any advantage against (Recipient), or any person interested in the proposed Contract;

v. The price or prices quoted in the attached Bid are fair and proper and are not tainted by any collusion, conspiracy, connivance, or unlawful agreement on the part of the Bidder or any other of its agents, representatives, owners, employees or parties in interest, including this affidavit.

By _____

Sworn and subscribed to before me this 12 day of March, 2013, in the State of Florida, County of Seminole.

_____ Notary Public

My Commission expires:
01-10-2017

PAMELA C SHANNON
MY COMMISSION # EE864045
EXPIRES January 10, 2017
(407) 398-0153 FloridaNotaryService.com

TRENCH SAFETY AFFIDAVIT FORM
(SECTION 00490)

(FAILURE TO COMPLETE THIS FORM MAY RESULT IN THE BID BEING DECLARED NON-RESPONSIVE)

Sun Road, Inc. (NAME OF CONTRACTOR) hereby provides written assurance that compliance with applicable Trench Safety Standards identified in the Occupational Safety & Health Administration's Excavation Safety Standards (OSHA) 29 C.F.R.S. 1926.650 Subpart P will be adhered to during trench excavation in accordance with Florida Statutes 553.60 through 533.64 inclusive (1990) "Trench Safety Act".

The specific methods of compliance with applicable Trench Safety Standards, and the associated cost of compliance (costs included in the Bid Price), are as follows (attach additional sheets if necessary):

Item and Safety Measure	Cost
SCOPING	$ 1600.00
SHIELDING	$ 1850.00
	$
	$
	$
	$
	$
TOTAL	$ 3450.00

By the signature of its undersigned authorized representatives, the Bidder hereby assures the CITY OF DELTONA that any such excavation performed by the Bidder will be performed in compliance with all applicable trench safety standards.

By [signature]

Sworn and subscribed to before me this 12 day of March, 2013, in the State of Florida, County of Seminole.

[signature] Notary Public

My Commission expires: 01-10-2017

PAMELA C SHANNON
MY COMMISSION # EE864045
EXPIRES January 10, 2017
(407) 398-0153 FloridaNotaryService.com

BIDDER'S CONTACT AND INFORMATION FORM
(SECTION 00110)

Bidder (Company) Name: ThadCon, LLC	F. E. I. N. or SS Number: 20-8366085
Mailing Address: 503 North Street	Street Address: 503 North Street
City, State, Zip: Daytona Beach, Florida 32114-2615	City, State, Zip: Daytona Beach, FL 32114-2615
Type of Entity: *(Circle one)* (Corporation) Partnership Proprietorship Joint Venture	*I hereby certify that this bid is made without prior understanding, agreement, or connection with any corporation, firm, or person submitting a bid for the same materials, supplies or equipment, and is in all respects fair and without collusion or fraud. I agree to abide by all conditions of this bid and certify that I am authorized to sign this bid for the Bidder.* X_____ Authorized Signature (Manual)
Incorporated in the State of: Florida Year: 2007	Typed or Printed Name: Thad R. Sizemore, III
Telephone Number: (386) 253-3963	Title: Managing Member
Fax Number: (386) 257-9676	
Email contact info: thadcontreys@aol.com	

SECTION 00300

BID RESPONSE FORM

Proposal of ThadCon, LLC, hereinafter called "Bidder", a Florida Corporation doing business as Prime Contractor to the City of Deltona, Florida hereafter called "Owner". The Bidder, in compliance with the Owner's invitation for bids for the construction of:

City of Deltona

ITB #PW-13-06

TIPTON DRIVE IMPROVEMENTS

having examined the plans and specifications with related documents and the site of the proposed work, and being familiar with all of the conditions surrounding the construction of the proposed project including the availability of materials and labor, hereby proposes to furnish all labor, materials, and supplies; and to construct the project in accordance with the Contract Documents, within the time set forth herein, and at the prices stated below. These prices are to cover all expenses incurred in performing the work required under the Contract Documents, of which this proposal is a part.

Bidder accepts all of the terms and conditions of the Advertisement for Bids and General Conditions, Instructions, and Information for Bidders.

Bidder hereby agrees to commence work under contract on or before a date to be specified in a written "Notice to Proceed" of the Owner and to substantially complete the Project within 120 consecutive calendar days and to fully complete the Project within 150 consecutive calendar days thereafter as stipulated in the specifications. Bidder further agrees to pay any liquidated damages, as specified in the Agreement, for each consecutive calendar day thereafter.

Bidder has examined and carefully studied the Bidding Documents and the following addendum receipt of which is hereby acknowledged:

No. 1	Dated: 3/8/2013	No.	Dated:
No.	Dated:	No.	Dated:
No.	Dated:	No.	Dated:
No.	Dated:	No.	Dated:

ADDENDUM # 1

CITY OF DELTONA
BID # PW 13-06
March 8, 2013

TIPTON DRIVE IMPROVEMENTS

All contents of this addendum shall be incorporated into the solicitation documents and the ensuing contract with the awarded contractor.

This addendum is to answer questions and clarify issues that have been brought up during the solicitation process.

Questions and inquiries are being accepted up to seven days prior to the bid opening. The last day and time questions and RFI's for this bid will be accepted are Friday, March 8, 2013. Therefore, no further questions or RFI's will be accepted regarding this project.

Addendums may be issued up to 48 hours prior to the bid opening due time.

City of Deltona is not responsible for third party plan rooms or third party plan holders. All documents pertaining to this bid can be downloaded from www.demandstar.com

CLARIFICATIONS:

a. A bid bond is required for this solicitation.

b. The engineer's estimate for this project is $260,000.

c. Bids shall be mailed to or dropped off at 255 Enterprise Road, Deltona, Florida 32725. Bids shall not be accepted at City Hall.

d. A Payment and Performance Bond is required for this project from the awarded Contractor. Payment and Performance Bond is required to be registered with Volusia County prior to a Notice to Proceed being issued. Proof of registration with Volusia County is required.

e. Contract time is: Substantial completion is 120 days. 30 additional days to final completion. Total Project completion is 150 days. Contract time includes permitting and the entire scope of work to complete this project.

f. Liquidated damages will be in effect for this contract ($1,000 per day).

g. The Work shall be performed by a General Contractor Licensed in the State of Florida. Contract shall not be awarded unless proof of valid license(s) is provided.

h. The City of Deltona is seeking Contractors who have proven past, positive experiences in projects of similar and same size of scope of work as the Prime Contractor. Contractors who cannot prove past, positive experiences in projects of similar and same size of scope of work as the Prime Contractor will not be considered for award.

i. References are required with bid submittals. References shall contain descriptions of work that are of similar and same size of scope of work. 8 references are required with submittals. References shall contain the Owners contact information for the projects referenced. References with a Contractor listed as the Owner shall not be accepted.

j. There are two places shown on the plans with potential water main conflicts. The plans mention "size and depths shown are unknown." Please note that at Tradewinds and Cavern Terrace, Sheet C-101, the water main is 4" AC and is 2.50 feet deep. At Sheffield and Elida, Sheet C-102, the water main is 8" AC and is 4.0 feet deep.

k. There is a potential water main conflict at the intersection of Tradewinds and Sheffield, near the inlet identified as SD-12. It is not labeled on the drawings but the Bid Form will establish the unit prices for water main conflicts and the Contractor will be paid for actual installed quantities.

l. If water main deflection is required on an AC water main the existing pipe shall be restrained via a thrust collar installed in accordance with the City of Deltona Standard Details.

m. All pipe material related to this project is proposed as RCP. ADS N12 is a product approved by the City of Deltona as an alternative for pipe material identified as RCP. HDPE is acceptable for material placed in areas that are not under the road.

n. Restoration activities shall restore the swale in accordance with the detail provided in the documents.

o. Any details not shown within the plans or drawings shall follow the City of Deltona standards manual.

p. Should the awarded Contractor encounter sprinkler systems, planted vegetation or older utility lines within the right-of-way. The City of Deltona requires the awarded Contractor to be customer friendly in letting the citizen know ahead of time (1 week minimum) that if there is a sprinkler system or planted vegetation within the right-of-way they have the option to remove the items. Should the citizen not remove the items, the Contractor shall be required to cap any irrigation system and return the sprinkler heads to the citizen.

QUESTIONS:

Question # 1 – Is this a unit price bid or lump sum?

Answer # 1 – There are unit price items and lump sum items. Award of bid will be made to the lowest, responsive and responsible bidder who meets the criteria of this solicitation.

Question # 2 –What permits are involved with this project?

Answer # 1 – The St. Johns WMD permit has been obtained. The project appears to be too small for a Stormwater Pollution Prevention Permit (SWPP). Should the awarded Contractor need to clear some extra areas for storage, it shall be the awarded Contractors responsibility to obtain the SWPP permit. The City of Deltona does not issue right-of -way use permits for its own projects.

Question # 3 – What is the amount for the testing allowance??

Answer # 3 – The testing allowance is listed as $3,000.00.

The bid due date remains Wednesday, March 13, 2013 at 2:00 p.m. All prospective bidders are hereby instructed not to contact the Engineer of Record or any member of the City of Deltona Commission, City Manager, or City of Deltona Staff members other than the noted contact person regarding this Invitation to Bid or their bid proposal at any time during the solicitation or award process. Any such contact shall be cause for rejection of your bid proposal.

All inquiries are to be directed to the Purchasing Agent for the Public Works Division at the City of Deltona. Contact for this solicitation is: Brian Boehs, Purchasing Agent. Email address is bboehs@deltonafl.gov. Phone is 386-878-8955.

ALL OTHER SPECIFICATIONS AND CONDITIONS REMAIN UNCHANGED.

RECEIPT OF THIS ADDENDUM IS HEREBY ACKNOWLEDGED

ThadCon, LLC
NAME OF BUSINESS

BY: 3/11/2013
SIGNATURE/DATE

Thad R. Sizemore -Managing Member
NAME & TITLE, TYPED OR PRINTED

503 North Street
MAILING ADDRESS

Daytona Beach, Florida 32114-2615
CITY, STATE, ZIP CODE

BASE PROPOSAL: Bidder agrees to perform all of the work described in the specifications and shown on the plans for the sum shown in the schedule below:

Item No.	Description	Qty	Unit	Unit Price	Total Price
General Administrative					
1	Mobilization/Demobilization	1	LS	$ 10,000.00	$ 10,000.00
2	General Requirements, Bonds, Permits, etc.	1	LS	$ 6,000.00	$ 6,000.00
3	Indemnification	1	LS	$ 1,000.00	$ 1,000.00
4	Testing Allowance (Roadway and Pipe Compaction)	1	LS	$ 3,000.00	$ 3,000.00
Stormwater Sitework					
5	Layout and As-Built Survey	1	LS	$ 9,250.00	$ 9,250.00
6	Temporary Erosion Protection	1	LS	$ 4,200.00	$ 4,200.00
7	Maintenance of Traffic	1	LS	$ 4,500.00	$ 4,500.00
8	Clearing and Grubbing	1	LS	$ 8,000.00	$ 8,000.00
9	Site Grading	1	LS	$ 18,000.00	$ 18,000.00
10	Remove and Dispose Existing Drainage Inlets	4	EA	$ 500.00	$ 2,000.00
11	Remove and Dispose Existing Drainage Culverts	225	LF	$ 15.00	$ 3,375.00
12	Remove and Replace Driveway	90	SY	$ 37.00	$ 3,330.00
13	Remove and Replace Pavement	550	SY	$ 75.00	$ 41,250.00
14	Furnish and Install 14" x 23" Elliptical RCP	55	LF	$ 45.00	$ 2,475.00
15	Furnish and Install 18" Reinforced Concrete Pipe	55	LF	$ 37.00	$ 2,035.00
16	Furnish and Install 36" Reinforced Concrete Pipe (<10-ft depth)	775	LF	$ 62.00	$ 48,750.00
17	Furnish and Install 36" Reinforced Concrete Pipe (>10-ft depth)	275	LF	$ 75.00	$ 20,625.00
18	Type "C" Inlet	3	EA	$ 1,700.00	$ 5,100.00
19	Type "D" Inlet - 6-ft Alternate B	2	EA	$ 3,800.00	$ 7,600.00
20	Type "J" Manhole - 6-ft Alternate A (<10-ft depth)	2	EA	$ 3,750.00	$ 7,500.00
21	Type "J" Manhole - 6-ft Alternate A (>10-ft depth)	2	EA	$ 5,500.00	$ 11,000.00
22	Modified Type "H" Outfall Structure	1	EA	$ 4,000.00	$ 4,000.00
23	Furnish and Install 36" Headwall	1	EA	$ 6,000.00	$ 6,000.00
24	Furnish and Install Rip Rap	110	SY	$ 50.00	$ 5,500.00
Water Main Conflict					
25	45º Bend (FLG.)	4	EA	$ 500.00	$ 2,000.00
26	Furnish and Install PVC C900 Pipe (restrained joint)	35	LF	$ 100.00	$ 3,500.00
27	Remove and Replace Pavement Related to Water Main Conflict	40	SY	$ 125.00	$ 5,000.00
			TOTAL BASE BID	$ 244,290.00	

TOTAL BASE BID IN WORDS:

Two Hundred Forty Four Thousand Two Hundred Ninety DOLLARS AND 0 /100 CENTS

THADCON, LLC
503 NORTH STREET
DAYTONA BEACH, FLORIDA 32114

The unit prices provided above shall include all labor, materials, bailing, shoring, removal, overhead, profit, insurance, etc., to cover the finished work of the several kinds required. Any changes to the Work after issuance of the Notice of Award shall be processed in accordance with Articles 10, 11, and 12 of the General Conditions (Section 00700) and Article 5 of the Agreement with the Owner.

Bidder understands that the Owner reserves the right to reject any or all bids and to waive any informalities in the bidding.

A bid security, attached in the sum of five (5) percent of the Total Bid Amount, is to become the property of the Owner in the event contract and bond are not executed within thirty (30) days of the Owner issuing a Notice of Award, as liquidated damages for the delay and additional expense to the Owner caused thereby.

Respectfully submitted:

By: ThadCon, LLC
(Business Name)

(SEAL - if bid is by corporation)

503 North Street
(Business Address)

Daytona Beach, Florida 32114-2615
(Business City, State, Zip Code)

(Signature)

Thad R. Sizemore, III
(Printed Name)

Managing Member
(Title)

Attest: Aileen B. Chaffee - Secretary

Business Address: 503 North Street

Daytona Beach, FL 32114-2615

State of Incorporation: Florida

THADCON, LLC
503 NORTH STREET
DAYTONA BEACH, FLORIDA 32114

SCHEDULE OF BASE BID MANUFACTURERS/SUPPLIERS
(SECTION 300A)

The Contract Documents are based upon the equipment or products available from the manufacturers/suppliers denoted as "A", "B", etc. However, the Bidder must indicate in his Bid which Base Bid manufacturer/supplier he intends to use for each item of equipment listed by circling one (1) of the listed manufacturers/suppliers. Should the Bidder fail to circle a named supplier, he hereby agrees to provide the item listed as "A". After receipt of bids, the Bidder may not substitute for any manufacturer or supplier circled. Listed manufacturers/suppliers identified as deductive alternates will be considered as a deductive alternate as presented in the Deductive Alternate Section of the Bid Form.

If the Bidder desires to propose one (1) or more substitution or "or equal" manufacturers/suppliers, he may write in the name of such substitution or "or equal" in the spaces provided on the pages following the lists, but he must, nevertheless, also circle one of the listed manufacturers/suppliers. All substitutions or "or equal" items must be identified at the time of Bid (see paragraph 6.7 of the General Conditions as amended by the Supplementary Conditions). Substitutions or "or equal" items will **not** be considered when determining the Apparent Lowest Bidder. Substitutions or "or equal" items will **not** be evaluated or considered until after the "Effective Date" of the Agreement. The Bidder shall base his Bid on providing one of the listed manufacturers/suppliers and shall assume for bidding purposes that all substitutions or "or equal" items will not be accepted.

If the proposed substitution or "or equal" manufacturer/supplier is determined "not equivalent" by the Engineer, the Bidder must use the circled manufacturer/supplier. If the Bidder fails to indicate which listed manufacturer/supplier he intends to use or if a substitution or an "or equal" is rejected, he must use the manufacturer/supplier listed as "A". Also, if the Bidder circles more than one listed manufacturer/supplier, he must use the first manufacturer/supplier circled (unless a substitution or "or equal" is approved).

Each proposed substitution or "or equal" will be evaluated in accordance with Paragraph 6.7 of the General Conditions as amended by the Supplementary Conditions following the Effective Date of the Agreement.

In addition to the reimbursement required under Paragraph 6.7 of the General Conditions, the Contractor shall also reimburse the Owner for any engineering costs directly attributable to the change in manufacturers/suppliers, caused by the acceptance of proposed substitution or "or equal" items, such as; additional field trips for the Engineer, additional redesign costs, and additional review costs, etc. Other costs directly attributable to the change in manufacturers/suppliers caused by the acceptance of proposed substitution or "or equal" items such as increased electrical requirements, larger building, modifications to structures, additional pumps, piping or tankage, etc., shall be borne by others and not by the Owner. Bidder further agrees that the use of substitute equipment offered will not affect the completion date.

The Owner may request, and the Bidder shall supply, complete information on proposed substitution or "or equal" items prior to the Notice of Award.

Category I - **SCHEDULE OF BASE BID MANUFACTURERS / SUPPLIERS (SECTION 300A)**

Item No.	Equipment Item or Material	Specification Section No.	Manufacturer/Supplier
1.	RCP Pipe		Hanson Pipe & Products.
2.	Pre Cast Drainage Structures		Mac Concrete
3.	Water main Pipe C-900		North American
4.	Water main Fittings		Union Tyler
5.	Concrete		Prestige
6.			
7.			

SUBSTITUTION LIST OF MANUFACTURERS / SUPPLIERS
(SECTION 00300B)

Bidder proposes the following substitutions and "or equal" items of alternate manufacturers/suppliers for the equipment of material categories so identified:

	Equipment Item Material	Drawing No.	Spec. Section	Substitute/"or equal" Manufacturer/Supplier (List One Only)	Proposed Price Deduct
1.	NA				
2.					
3.					
4.					
5.					
6.					
7.					
9.					
10.					

SUBSTITUTIONS AND "OR EQUAL"

The above signed as Bidder agrees that substitutions or "or equal" items will not be considered until after the "Effective Date of the Agreement" and will be evaluated in accordance with Paragraphs 6.7, 6.7.1 and 6.7.2, of the General Conditions as amended by the Supplementary Conditions. If Bidder intends to propose substitutions or "or equal" items after the "Effective Date of the Agreement", it is agreed that these items will be listed on the Substitution List included with the Bid (form provided herein). Only the proposed substitutions or "or equal" items listed on the Substitution List will be evaluated by the Engineer in accordance with the General Conditions.

QUESTIONNAIRE FORM
(SECTION 00301)

DATE: March 13, 2013

PROJECT IDENTIFICATION **City of Deltona – Public Works Division**
TIPTON DRIVE IMPROVEMENTS

NAME OF BIDDER: ThadCon, LLC

BUSINESS ADDRESS: 503 North Street Daytona Beach, Florida 32114-2615

TELEPHONE NO: 386-253-3963

CONTRACTOR'S FLORIDA LICENSE NO: CGC009472 CUC1224517

The signed bidder warrants the truth and accuracy of all statements and answers herein contained. Include additional sheets if necessary.

1. How many years has your organization been in business as a General Contractor? 5+ Years - SEE ATTACHED

2. Have you ever failed to complete work awarded to you? If so, where and why? NO

3. Name three (3) municipalities or government entities for which you have performed similar projects as this one and to which you refer?
   City of South Daytona - US-1/SR-5 Streetscape
   City of Daytona Beach Shores - South A-1-A Improvements
   City of New Smyrna Beach - West Canal Streetscape

4. Have you personally inspected the site of the proposed Work? Describe any anticipate problems with the site and your proposed solutions.
   Yes - No Anticipated Problems

5. Will you Subcontract any part of this Work? If so, describe which portion(s).
   Asphalt Paving
   Sod Restoration

6. What equipment do you own that is available for the Work? (attach additional sheets if necessary)

SEE ATTACHED

7. What equipment will you purchase for the Work?

None Anticipated

8. What equipment will you rent for the Work?

Trench Box

Dewatering Equipment

9. The following is given as a summary of the Financial Statement of the undersigned: (List Assets and Liabilities and use insert sheet if necessary.)

Will Produce Upon Award of Bid

10. State the true and exact, correct, and complete name under which you do business.
Bidder is: ThadCon, LLC

Thad Construction Co., Inc. - Parent / Affiliate Company

Thad Construction Company was incorporated in 1959 by the late Thad R. Sizemore as a General Contractor. In 1974, Thad R. Sizemore Jr. became president of Thad Construction Co., Inc. and has administrated the company through the present. He has held a state certified General Contractor's License for 36 years and is co-manager and principal of **Thadcon, LLC.**

Thadcon, LLC was formed in January of 2007 in order to facilitate FDOT certification. Many of the same employees that were with Thad Construction are now employed by Thadcon, LLC. Thad R. Sizemore, III began working with Thad Construction Co., Inc. in 1988 and is now one of the Managing Members of Thadcon, LLC. He holds a state certified Underground Utilities Contractors license in this company.

Continuation of SECTION 00301

6. Equipment owned by ThadCon, LLC:

2011 Takeuchi TL240 Track Loader

2009 Link Belt 75 Spin Ace Excavator

2006 Komatsu PC-50 Trackhoe

2006 CAT 303.5 Excavator

2004 Volvo Roller Super Pac 540

2004 CAT D3GXL Tractor

2003 CAT 236 Skid Steer

2002 Kobelco SK135SRLC Excavator

2001 Volvo L70 Wheel Loader

1999 Ditch Witch #3700

1998 Volvo L70 Wheel Loader

1998 Gallion 3 Wheel Roller

1997 CAT IT286G Wheel Loader

1995 Bobcat Model #2410

1990 Huber M850 Motor Grader

SUB-CONTRACTORS AND AFFILIATES FORM
(SECTION 00301A)

The following are a list of Sub Contractors or Affiliates that will be utilized in this project. Use additional sheets if necessary.

1. Firm Name: D & W Paving, Inc.
   Trade: Asphalt Paving
   Firm Owner: Clay Durance
   Firm Address: 308 Sunset Avenue Holly Hill, FL 32117
   Firm Phone Number: 386-258-5440

2. Firm Name: Sula Sod, LLC
   Trade: Sodding
   Firm Owner: Anthony Ford
   Firm Address: 120 S. Samsula Drive New Smyrna Beach, FL 32168
   Firm Phone Number: 386-424-9088

3. Firm Name: _____
   Trade: _____
   Firm Owner: _____
   Firm Address: _____
   Firm Phone Number: _____

4. Firm Name: _____
   Trade: _____
   Firm Owner: _____
   Firm Address: _____
   Firm Phone Number: _____

5. Firm Name: _____
   Trade: _____
   Firm Owner: _____
   Firm Address: _____
   Firm Phone Number: _____

REFERENCES FORM
(SECTION 00301B)

The City of Deltona is seeking Contractors who have proven past, positive experiences in projects of similar and same size of scope of work. These references are required with your submittals. References shall contain the Owners contact information for the projects referenced. References with another Contractor listed as the Owner shall not be accepted. Contractors not having past, positive experiences in projects of similar and same size of scope of work, as the Prime Contractor, will not be considered. References which are located in foreign countries are not acceptable.

1. **Project Name:** US-1/SR-5 Streetscape Improvements
   Project Value: $4,397,046.00
   Project Description: Storm Drain, Watermain, Sewer, Sidewalk, Roadway, Landscaping, Irrigation & Lighting
   Project Owner: City of South Daytona
   Owner contact information: Les Gillis 386-322-3080
   Project Location: Ridgewood Ave from Ridge Blvd. to Beville Road
   Project Start and End Dates: January 2012 to January 2013

2. **Project Name:** SR-44 Gateways Streetscape Project
   Project Value: $1,393,103.00
   Project Description: Utilities and Streetscape Improvements
   Project Owner: City of New Smyrna Beach
   Owner contact information: Khalid Reishidat 386-547-0582
   Project Location: I-95 at SR-44 and SR-44 at W. Canal Strett
   Project Start and End Dates: April 2012 to November 2012

3. **Project Name:** South A-1-A Improvements
   Project Value: $2,326,842.00
   Project Description: Storm Drain, Sewer, Sidewalk & Curb, Roadway, Utility Conduit
   Project Owner: City of Daytona Beach Shores
   Owner contact information: Fred Hiatt 386-763-5365
   Project Location: Dunlawton Avenue to Emilia Avenue
   Project Start and End Dates: March 2011 to April 2012

4. **Project Name:** West Canal Streetscape
   Project Value: $2,941,203.00
   Project Description: Storm Drain, Sidewalks & Curb, Driveways, Roadways, Landscaping, Irrigation & Lighting
   Project Owner: City of New Smyrna Beach
   Owner contact information: Khalid Reishidat 386-547-8498
   Project Location: West Canal Street from SR-44 to US-1
   Project Start and End Dates: July 2008 to December 2010

REFERENCES FORM
(SECTION 00301B CONTINUED)

5. **Project Name:** Ormond Shores Drive Phase I & II
Project Value: $69,400.00
Project Description: Drainage Replacement
Project Owner: City of Ormond Beach
Owner contact information: Alex Blake 386-676-3269
Project Location: Ormond Shores Drive
Project Start and End Dates: February 2010 to March 2010 and July 2010

6. **Project Name:** Volusia County Bus Facility
Project Value: $511,800.00
Project Description: Storm Drain, Parking Lot, Landscaping & Lighting
Project Owner: Volusia County School Board
Owner contact information: Tom Nasbe, PM 386-947-8786
Project Location: Bellevue Avenue Extension
Project Start and End Dates: May 2009 to October 2009

7. **Project Name:** Trailwood Drive Swale Replacement
Project Value: $65,898.00
Project Description: Storm Drainage, Watermain Relocates
Project Owner: City of Port Orange
Owner contact information: Warren Pike, PWD 386-506-5577
Project Location: Trailwood Drive
Project Start and End Dates: March 2009 to May 2009

8. **Project Name:** Ponce De Leon Drive Storm Drain Improvements
Project Value: $69,947.00
Project Description: STorm Drain, Road Replacement, Striping & Signage
Project Owner: City of Ormond Beach
Owner contact information: John Noble, PE 386-676-3269
Project Location: Ponce De Leon Drive
Project Start and End Dates: February 2008 to April 2008

SEE ATTACHED BID BOND

BID BOND FORM
(SECTION 00410)

KNOWN ALL MEN BY THESE PRESENTS, that we, the undersigned, _____ as Principal, and _____ as Surety, are hereby held and firmly bound unto the City of Deltona, Florida as Owner in the penal sum of, (five percent 5%) of the Contract Bid _____ for the payment of which, well and truly to be made, we hereby and severally bind ourselves, successors and assigns to pay Owner upon default of Bidder the penal sum set forth on the face of this Bond. Signed, this _____ day of _____, 20____.

The condition of the above obligation is such that whereas the Principal has submitted to the City of Deltona, Florida a certain bid, attached hereto and hereby made a part hereof, to enter into a contract in writing, for the **TIPTON DRIVE IMPROVEMENTS.**

NOW THEREFORE,

1. Default of Bidder shall occur upon the failure of Bidder to deliver within the time required by the Bidding Documents the executed Agreement required by the Bidding Documents and any performance and payment bonds required by the Bidding Documents and Contract Documents.

2. This obligation shall be null and void if:

   2.1 Owner accepts Bidder's bid and Bidder delivers within the time required by the Bidding Documents (or an extension thereof agreed to in writing by Owner) the executed Agreement required by the Bidding Documents and any performance and payment bonds required by the Bidding Documents and Contract Documents, or

   2.2 All bids are rejected by Owner, or

   2.3 Owner fails to issue a notice of award to Bidder within the time specified in the Bidding Documents (or any extension thereof agreed to in writing by Bidder and, if applicable, consented to by Surety when required by paragraph 5 hereof).

3. Payment under this Bond will be due and Payable upon default of Bidder and within thirty (30) calendar days after receipt of Bidder and surety of written notice of default from Owner which notice will be given with reasonable promptness, identifying this Bond and the Project and including a statement of the amount due.

4. Surety waives notice of any and all defenses based on or arising out of any time extension to issue notice of award agreed to in writing by Owner and Bidder, providing that the time for issuing notice of award including extensions shall not in the aggregate exceed one hundred twenty (120) days from Bid Due without Surety's written consent.

5. No suite or action shall be commenced under this Bond prior to thirty (30) calendar days after the notice of default required in paragraph 3 above is received by Bidder and Surety, and in no case later than one year after Bid Due Date.

6. Any suite or action under this Bond shall be commenced only in a court of competent jurisdiction located in the state in which the Project is located.

SEE ATTACHED BID BOND

7. Notice required hereunder shall be in writing and sent to Bidder and Surety at their respective addresses shown on the face of this Bond. Such notices may be sent by personal delivery, commercial courier or by United States Registered or Certified Mail, return receipt requested, postage pre-paid, and shall be deemed to be effective upon receipt by the part concerned.

8. Surety shall cause to be attached to this Bond a current and effective Power of Attorney evidencing the authority of the officer, agent or representative who executed this Bond on behalf of Surety to execute, seal and deliver such Bond and bind the Surety thereby.

9. This bond is intended to conform to all applicable statutory requirements. Any applicable requirement of any applicable statute that has been omitted from this Bond shall be deemed to be included herein as if set forth at length. If any provision of the Bond conflicts with any applicable provision of any applicable statute, then the provision of said statute shall govern and the remainder of the Bond that is not in conflict therewith shall continue in full force and effect.

10. The term "bid' as used herein includes a bid, offer or proposal as applicable.

IN WITNESS WHEREOF, the Principal and the Surety have hereunto set their hands and seals, and such of them as are corporations have caused their corporate seals to be hereto affixed and these presents to be signed by their proper officers, the day and year first set forth above.

Principal (Print Full Name):

_____

By:_____ (LS)

Title:_____

Attest:_____
Signature and Title

Surety (Print Full Name):

_____ (Seal)
Surety's Name and Corporate Seal

By:_____
Signature (attach power of attorney)

Title:_____

Attest:_____
Signature and Title

_____
(DATE)

IMPORTANT – Surety companies executing bonds must appear on the Treasury Department's most current list (Circular 570 as amended) and be authorized to transact business in the State of Florida.

CORPORATE RESOLUTION FORM
(SECTION 00420)

I, Aileen B. Chaffee, Secretary of ThadCon, LLC, a corporation organized and existing under the laws of the State of Florida, hereby certify that at a meeting of the Board of Directors of the Corporation duly called and held on March 11, 20 13 at which a quorum was present and acting throughout, the following resolutions were adopted and are now in full force effect:

RESOLVED that the following individuals of this corporation are authorized to execute on behalf of this corporation A Bid and Agreement to the City of Deltona for the construction of Tipton Drive Improvements.

I further certify that the names of the officers of this corporation and any other persons authorized to act under this resolution and their official signatures are as follows:

NAME	OFFICE	OFFICIAL SIGNATURE
Thad R. Sizemore, Jr.	Managing Member	
Thad R. Sizemore, III	Managing Member	
Aileen B. Chaffee	Secretary	

IN WITNESS THEREOF, I have hereunto subscribed my name as Secretary and affixed the seal of the corporation this 11th day of March, 20 13

HOLD HARMLESS AND INDEMNITY AGREEMENT
(SECTION 00430)

ThadCon, LLC, agrees through the signing of this document by an authorized party or agent that it shall defend, indemnify and hold harmless the City of Deltona, and its agents, employees, and public officials from and against all suits, losses, claims, demands, judgments of every name and description arising out of or incidental to the performance of this contract or work performed thereunder, whether or not due to or caused by the negligence of the City of Deltona, its agents, employees, and public officials excluding only the sole negligence of the City of Deltona, its agents, employees, and Public Officials.

This provision shall also pertain to any claims brought against the City of Deltona, its agents, employees, and public officials by an employee of the named Contractor, any Sub-contractor, or anyone directly or indirectly employed by any of them.

The Contractor's obligation to indemnify the City of Deltona, its agents, employees and public officials under this provision shall be limited to $1,000,000 per occurrence which the parties agree bears a reasonable commercial relationship to the contract.

The Contractor agrees to accept, and acknowledges as adequate remunerations, the consideration of $10, which is part of the agreed bid price, the promises contained herein, and other good and valuable consideration, the receipt of which is hereby acknowledged, for agreement to enter into this Hold Harmless and Indemnity Agreement.

CONTRACTOR
Thad R. Sizemore, III

March 13, 2013
DATE

DRUG-FREE WORKPLACE FORM
(SECTION 00440)

The undersigned Bidder in accordance with Florida Statute 287.087, hereby certifies that

ThadCon, LLC does:
(*Name of Business*)

1. Publish a statement notifying employees that the unlawful manufacture, distribution, dispensing, possession, or use of a controlled substance is prohibited in the workplace and specifying the actions that will be taken against employees for violations of such prohibition.

2. Inform employees about the dangers of drug abuse in the workplace, the business's policy of maintaining a drug-free workplace, any available drug counseling, rehabilitation, and employee assistance programs, and the penalties that may be imposed upon employees for drug abuse violations.

3. Give each employee engaged in providing the commodities or contractual services that are proposed a copy of the statement specified in subsection (1).

4. In the statement specified in subsection (1), notify the employees that, as a condition of working on the commodities or contractual services that are under bid, the employee will abide by the terms of the statement and will notify the employer of any conviction of, or plea of guilty or nolo contendere to, any violation of Chapter 893 or of any controlled substance law of the United States or any state, for a violation occurring in the workplace no later than five (5) days after such conviction.

5. Impose a sanction on, or require the satisfactory participation in a drug abuse assistance or rehabilitation program if such is available in the employee's community, by any employee who is so convicted.

6. Make a good faith effort to continue to maintain a drug-free workplace through implementation of this section.

As the person authorized to sign the statement, I certify that this firm complies fully with the above requirements.

X _____
Bidder's Signature

Thad R. Sizemore, III March 13, 2013
Date

PROPOSER'S CERTIFICATION FORM
(SECTION 00460)

I have carefully examined the Request for Proposal, Instructions to Proposers, General and/or Special Conditions, Vendor's Notes, Specifications, proposed agreement and any other documents accompanying or made a part of this Request for Proposal.

I hereby propose to furnish the goods or services specified in the Request for Proposal at the prices and rates quoted in my Proposal. I agree that my Proposal will remain firm for a period of up to one hundred twenty (120) days in order to allow the City adequate time to evaluate the Proposal.

I agree to abide by all conditions of the Proposal and understand that a background investigation may be conducted by the City of Deltona prior to award.

I certify that all information contained in this Proposal is truthful to the best of my knowledge and belief. I further certify that I am a duly authorized to submit this Proposal on behalf of the vendor / contractor as its act and deed and that the vendor / contractor is ready, willing and able to perform if awarded the contract.

I further certify, under oath, that this Proposal is made without prior understanding, agreement, connection, discussion, or collusion with any other person, firm or corporation submitting a Proposal for the same product or service; no officer, employee or agent of the City of Deltona Government or of any other Proposer interested in said Proposal; and that the undersigned executed this Proposer's Certification with full knowledge and understanding of the matters therein contained and was duly authorized to do so.

Name of Business ThadCon, LLC

By: _____
Signature

Thad R. Sizemore, III
Managing Member
Name & Title, Typed or Printed

503 North Street
Mailing Address

Daytona Beach, Florida 32114-2615
City, State, Zip Code

(386) 253-3963
Telephone Number

Sworn to and subscribed before me

This 13th day of

March, 20 13

Deborah Ann Hanley
Signature of Notary

Notary Public, State of Florida

Personally known X
-OR-
Produced Identification _____

DEBORAH ANN HANLEY
MY COMMISSION # DD922501
EXPIRES: September 02, 2013
1-800-3-NOTARY Fl. Notary Discount Assoc. Co.

SWORN STATEMENT UNDER SECTION 287.133(3)(A), FLORIDA STATUTES, ON PUBLIC ENTITY CRIMES (SECTION 00470)

THIS FORM MUST BE SIGNED IN THE PRESENCE OF A NOTARY PUBLIC OR OTHER OFFICER AUTHORIZED TO ADMINISTER OATHS.

This sworn statement is submitted to the City of Deltona by Thad R. Sizemore, III - Managing Member
(Individual's name and title)

For ThadCon, LLC
(Name of entity submitting sworn statement)

Whose business address is 503 North Street
Daytona Beach, Florida 32114-2615

And (if applicable) its Federal Employer Identification Number (FEIN) is 20-8366085
(if the entity has no FEIN, include the Social Security Number of the individual signing this sworn statement)

1. I understand that a "public entity crime" as defined in Section 287.133(1)(g), Florida Statutes, means a violation of any State or Federal law by a person with respect to and directly related to the transaction of business with any public entity or with an agency or political subdivision of any other state or with the United States, including, but not limited to, any bid or contract for goods or services to be provided to any public entity or an agency or political subdivision of any other state or a of the United States and involving antitrust, fraud, theft, bribery, collusion, racketeering, conspiracy, or material misrepresentation.

11. I understand that "convicted" or "conviction" as defined in Paragraph 287.133(1)(b), Florida Statutes, means a finding of guilt or a conviction of a public entity crimes, with or without an adjudication of guilt, in any Federal or State trial court of record relating to charges brought by indictment or information after July 1, 1989, as a result of a jury verdict, non-jury trial, or entry of a plea of guilty or nolo contendere.

12. I understand that an "affiliate' as defined in Section 287.133(1)(a), Florida Statutes, means:

    A predecessor or successor of a person convicted of a public entity crime: or an entity under the control of any natural person who is active in the management of the entity and how has been convicted of a public entity crime. The term "affiliate" includes those officers, directors, executives, partners, shareholders, employees, members, and agents who are active in the management of an affiliate. The ownership by one (1) person of shares constituting a controlling interest in another person, or a pooling of equipment or income among persons when not for fair market value under an arm's length agreement, shall be a prima facie case that one person controls another person. A person who knowingly enters into a joint venture with a person who has been convicted of a public entity crime in Florida during the preceding thirty-six (36) months shall be considered an affiliate.

13. I understand that a "person" as defined in Section 287.133(1)(e), Florida Statutes, means any natural person or entity organized under the laws of any state or of the United States with the legal power to enter into a binding contract and which bids or applies to bid on contracts for the provision of goods or services let by a public entity, or which otherwise transacts or applies to transact business with a public entity. The term "person" includes those officers, directors, executives, partners, shareholders employees, members, and agents who are active in management of an entity.

14. Based on information and belief, the statement which I have marked below is true in relation to the entity submitting this sworn statement. (You must indicate which statement applies.)

(SECTION 00470 Continued)

___X___ Neither the entity submitting this sworn statement, nor any officers, directors, executives, partners, shareholders, employees, members, or agent who is active in management of the entity, nor the affiliate of the entity has been charged with and convicted of a public entity crime subsequent to July 1, 1989.

_____ The entity submitting this sworn statement, or one or more of the officers, directors, executives, partners, shareholders, employees, members or agent who are active in management of the entity, or an affiliate of the entity, has been charged with and convicted of a public entity crime subsequent to July 1, 1989.

_____ The entity submitting this sworn statement, or one or more of the officers, directors, executives, partners, shareholders, employees, members or agents who are active in management of the entity, or an affiliate of the entity, has been charged with and convicted of a public entity crime subsequent to July 1, 1989. However, there has been a subsequent proceeding before an Administrative Law Jury of the State of Florida, Division of Administrative Hearings and the Final Order entered by the Administrative Law Jury determined that it was not in the public interest to place the entity submitting this sworn statement on the convicted vendor list. (You must attach a copy of the final order).

I UNDERSTAND THAT THE SUBMISSION OF THIS FORM TO THE CITY OF DELTONA IS FOR THE CITY ONLY AND, THAT THIS FORM IS VALID THROUGH DECEMBER 31, OF THE CALENDAR YEAR IN WHICH IT IS FILED. I ALSO UNDERSTAND THAT I AM REQUIRED TO INFORM THE CITY PRIOR TO ENTERING IN TO A CONTRACT IN EXCESS OF THE THRESHOLD AMOUNT PROVIDED IN SECTION 287.017, FLORIDA STATUTES, FOR CATEGORY TWO OF ANY CHANGE IN THE INFORMATION CONTAINED IN THIS FORM.

SIGNATURE Thad R. Sizemore, III

March 13, 2013
DATE

State of Florida
County of Volusia

Personally appeared before me, the undersigned authority, Thad R. Sizemore, III (name of individual signing) who, after first being sworn by me, affixed his/her signature in the space provided above on the 13 day of March, 20 13.

Deborah Ann Hanley
NOTARY PUBLIC

My commission expires: September 2, 2013

DEBORAH ANN HANLEY
MY COMMISSION # DD922501
EXPIRES: September 02, 2013
1-800-3-NOTARY Fl. Notary Discount Assoc. Co.

NON COLLUSION AFFIDAVIT FORM
(SECTION 00480)

STATE OF FLORIDA

COUNTY OF VOLUSIA

Thad R. Sizemore, III, being first duly sworn deposes and says that:

i. He/She is the Managing Member, of ThadCon, LLC, the Bidder that has submitted the attached Bid;

ii. He/She is fully informed respecting the preparation and contents of the attached Bid and of all pertinent circumstances respecting such Bid;

iii. Such Bid is genuine and is not a collusive or sham Bid;

iv. Neither the said Bidder nor any of its officers, partners, owners, agents, representatives, employees, or parties in interest, including this affidavit, have in any way, colluded, conspired, connived or agreed, directly or indirectly, with any other Bidder, firm or person to submit a collusive or sham Bid in connection with the Contract for which the attached Bid has been submitted; or to refrain from bidding in connection with such Contract; or have in any manner, directly or indirectly, sought by agreement or collusion,, or communication, or conference with any Bidder, firm, or person to fix the price or prices in the attached Bid or of any other Bidder, or to fix any overhead, profit, or cost elements of the Bid price or the Bid price of any other Bidder, or to secure through any collusion, conspiracy, connivance, or unlawful agreement any advantage against (Recipient), or any person interested in the proposed Contract;

v. The price or prices quoted in the attached Bid are fair and proper and are not tainted by any collusion, conspiracy, connivance, or unlawful agreement on the part of the Bidder or any other of its agents, representatives, owners, employees or parties in interest, including this affidavit.

By _____
Thad R. Sizemore, III

Sworn and subscribed to before me this 13 day of March, 2013, in the State of Florida, County of Volusia.

Deborah Ann Hanley Notary Public

My Commission expires: September 2, 2013

DEBORAH ANN HANLEY
MY COMMISSION # DD922501
EXPIRES: September 02, 2013
1-800-3-NOTARY Fl. Notary Discount Assoc. Co.

TRENCH SAFETY AFFIDAVIT FORM
(SECTION 00490)
(FAILURE TO COMPLETE THIS FORM MAY RESULT IN THE BID BEING DECLARED NON-RESPONSIVE)

ThadCon, LLC (NAME OF CONTRACTOR) hereby provides written assurance that compliance with applicable Trench Safety Standards identified in the Occupational Safety & Health Administration's Excavation Safety Standards (OSHA) 29 C.F.R.S. 1926.650 Subpart P will be adhered to during trench excavation in accordance with Florida Statutes 553.60 through 533.64 inclusive (1990) "Trench Safety Act".

The specific methods of compliance with applicable Trench Safety Standards, and the associated cost of compliance (costs included in the Bid Price), are as follows (attach additional sheets if necessary):

Item and Safety Measure	Cost
Trench Box	$ 1,500.00
Sloping	$ 500.00
	$
	$
	$
	$
	$
TOTAL	$ 2,000.00

By the signature of its undersigned authorized representatives, the Bidder hereby assures the CITY OF DELTONA that any such excavation performed by the Bidder will be performed in compliance with all applicable trench safety standards.

By _____
Thad R. Sizemore, III

Sworn and subscribed to before me this 13 day of March, 2013, in the State of Florida, County of Volusia.

Deborah Ann Hanley Notary Public

My Commission expires: September 2, 2013

DEBORAH ANN HANLEY
MY COMMISSION # DD922501
EXPIRES: September 02, 2013
1-800-3-NOTARY Fl. Notary Discount Assoc. Co.